PARKING DECK II AND SURFACE PARKING (DESIGN-BUILD)

CONSTRUCTION DOCUMENTS

SCO# 18-19226-01A, CODE: 41828, ITEM 301

4965 RIEGEL ROAD, WILMINGTON, NC

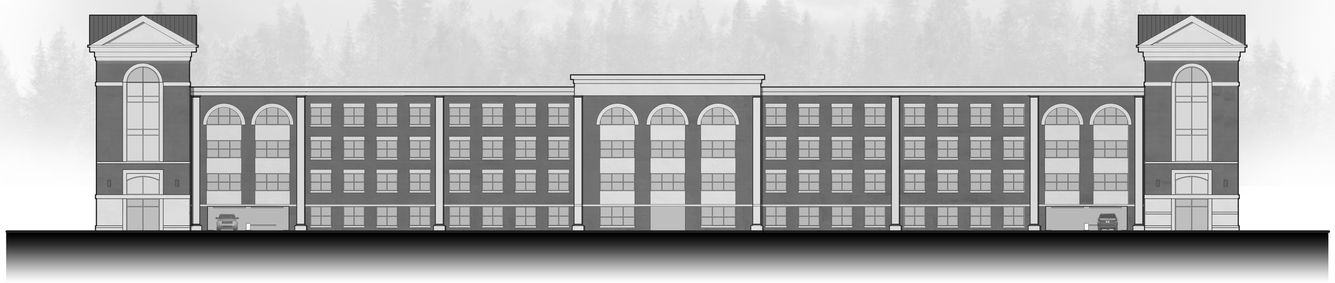

INDEX OF DRAWINGS

SHEET #	SHEET TITLE
GENERAL	
G001	COVER SHEET AND DRAWING INDEX
G002	CODE COMPLIANCE ("APPENDIX B")
G100	LIFE SAFETY PLANS
G101	DOOR SCHEDULE, PARTITION TYPES AND DETAILS
CIVIL	
CX100	EXISTING CONDITIONS
CD100	DEMOLITION AND TREE REMOVAL PLAN
CE101	EROSION CONTROL - STAGE1
CE102	EROSION CONTROL - STAGE 2
CS100	SITE PLAN
CF100	FIRE PROTECTION SITE PLAN
CG100	GRADING, DRAINAGE AND UTILITY PLAN
CE501	EROSION CONTROL DETAILS
CE502	EROSION CONTROL DETAILS
CE503	EROSION CONTROL DETAILS
CS501	SITE DETAILS
CS502	SITE DETAILS
CS503	SITE DETAILS
CS504	SITE DETAILS
CL100	LANDSCAPE PLAN
CI100	IRRIGATION PLAN
CL501	LANDSCAPE DETAILS
CG501	STORM DRAINAGE DETAILS
CG502	STORM DRAINAGE DETAILS
CG503	STORM DRAINAGE DETAILS
CU501	PUBLIC WATER DETAILS
CU502	PUBLIC WATER DETAILS
STRUCTURAL	
AG401	ENTRANCE / EXIT PLANS
AG402	ELEVATIONS
AG601	SIGN & PACS NOTES
AG602	SIGNS & MOUNTING DETAILS
S-001	STRUCTURAL GENERAL NOTES
S-002	ABBREVIATIONS AND LEGENDS
S-100	FOUNDATION PLAN
S-101	LEVEL 1 PLAN
S-102	LEVEL 2 PLAN
S-103	LEVEL 3 PLAN
S-104	LEVEL 4 PLAN
S-105	LEVEL 5 PLAN
S-210	SHEAR WALL & LITEWALL ELEVATIONS
S-301	BUILDING SECTIONS
S-302	BUILDING SECTIONS
S-303	BUILDING SECTIONS
S-401	(MISC) ENLARGED PLANS
S-410	STAIR TOWER NO. 1 ENLARGED PLANS
S-411	STAIR TOWER NO. 1 ENLARGED PLANS
S-420	STAIR TOWER SECTIONS
S-421	STAIR TOWER SECTIONS
S-422	STAIR TOWER SECTIONS & DETAILS
S-501	TYPICAL DETAILS
S-510	FOUNDATION DETAILS
S-511	FOUNDATION DETAILS
S-520	P/C BEAM DETAILS
S-521	P/C TEE DETAILS
S-522	P/C LITEWALL DETAILS
S-523	P/C SHEAR WALL DETAILS
S-524	TYPICAL P/C CONNECTION DETAILS
S-525	P/C COLUMN DETAILS
S-540	STRUCTURAL DETAILS
S-550	MISC METALS DETAILS
S-560	MASONRY DETAILS
S-570	WATERPROOFING & EXPANSION JOINT DETAILS
S-571	WATERPROOFING & EXPANSION JOINT DETAILS
S-650	LAP SPLICING SCHEDULES
ARCHITECTURAL	
AE101	LEVEL ONE FLOOR PLAN
AE102	LEVEL TWO - FOUR FLOOR PLAN
AE103	LEVEL FIVE FLOOR PLAN
AE104	ROOF PLAN
AE201	EXTERIOR ELEVATIONS
AE301	BUILDING SECTIONS
AE401	STAIR TOWER PLANS
AE402	STAIR TOWER SECTIONS - RAILING DETAILS
AE403	STAIR TOWER DETAILS
AE404	ENLARGED PLANS AND INTERIOR ELEVATIONS
AE601	FINISH SCHEDULES AND WAYFINDING SIGNAGE
AE602	WINDOW SCHEDULE AND DETAILS
AE701	PRECAST PANEL ELEVATIONS
AE702	PRECAST PANEL ELEVATIONS
AE703	PRECAST PANEL ELEVATIONS
AE704	PRECAST PANEL ELEVATIONS
AE705	PRECAST PANEL ELEVATIONS
AE710	PRECAST PANEL DETAILS
FIRE PROTECTION	
FA001	FIRE ALARM LEGEND NOTES AND DETAILS
FA101	FIRE ALARM FLOOR PLANS
FP001	FIRE PROTECTION LEGEND, SCHEDULES AND DETAILS
FP101	FIRST LEVEL - FIRE PROTECTION PLAN
FP102	SECOND LEVEL - FIRE PROTECTION PLAN
FP103	THIRD LEVEL - FIRE PROTECTION PLAN
FP104	FOURTH LEVEL - FIRE PROTECTION PLAN
FP105	FIFTH LEVEL - FIRE PROTECTION PLAN
FP201	FIRE PROTECTION PIPING ISOMETRIC
PLUMBING	
P001	PLUMBING LEGEND, SCHEDULES AND DETAILS
P101	FIRST LEVEL - PLUMBING PLAN
P102	SECOND LEVEL - PLUMBING PLAN
P103	THIRD LEVEL - PLUMBING PLAN
P104	FOURTH LEVEL - PLUMBING PLAN
P105	FIFTH LEVEL - PLUMBING PLAN
P201	PLUMBING PIPING ISOMETRIC
MECHANICAL	
M-001	GENERAL NOTES, LEGEND, CONTROLS, AND SCHEDULE
MH101	FIRST LEVEL PLAN
MH102	SECOND LEVEL PLAN
MH103	THIRD LEVEL PLAN
MH104	FOURTH LEVEL PLAN
MH105	FIFTH LEVEL PLAN
ELECTRICAL	
E-001	ELECTRICAL LEGEND, NOTES AND ABBREVIATIONS
ES101	ELECTRICAL SITE PLAN
ES501	ELECTRICAL SITE DETAILS
ES502	ELECTRICAL SITE DETAILS
E-101	FIRST LEVEL - LIGHTING, POWER AND SYSTEMS PLAN
E-102	TYPICAL LEVELS SECOND-FOURTH - LIGHTING, POWER AND SYSTEMS PLAN
E-103	FIFTH LEVEL - LIGHTING, POWER AND SYSTEMS PLAN
E-500	ELECTRICAL DETAILS
E-600	RISER DIAGRAMS
E-700	SCHEDULES

SCHEDULE OF EXTERIOR BUILDING FINISHES

- THIN BRICK: FELD HAUS
- PRECAST CONCRETE: 019-09
- MODULAR BRICK: STATESVILLE BRICK COMPANY RED ROYAL SPECIAL
- CURTAINWALL: CUSTOM WHITE MATCHING UNCW STANDARD ("PALAIS WHITE" SW #2429 BY SHERWIN WILLIAMS)
- BRICK VENEER EXPANSION JOINTS TO MATCH BRICK COLOR; BASIS OF DESIGN : TREMCO "BAPTIST BRICK"
- BRICK MORTAR (DUMPSTER ENCLOSURE): LIGHT GREY; BASIS OF DESIGN BY GIANT
- GUTTERS AND DOWNSPOUTS:
- HOLLOW METAL DOORS AND FRAMES:
- STUCCO:

* ALL COLORS TO BE APPROVED BY THE OWNER PRIOR TO FABRICATION AND INSTALLATION

SCHEDULE OF ALTERNATES

ALTERNATE NO. 1A: PAINT / STAIN DECK UNDERSIDE WITH A WHITE FINISH WITH 1-YEAR WARRANTY. PAINT ALL SPRINKLER AND STORM PIPING (INCLUDES VERTICAL, HORIZONTAL AND DIAGONAL PIPES.)

ALTERNATE NO. 1B: PAINT / STAIN VERTICAL SURFACES WITH A WHITE FINISH WITH 1-YEAR WARRANTY

ALTERNATE NO. 2: PROVIDE ALUMINUM NON-GLAZED FRAMES AT OPENINGS INDICATED IN THE ARCHITECTURAL DRAWINGS. ALL STAIR WINDOWS AND FRAMES TO REMAIN IN BASE BID.

ALTERNATE NO. 3A: ADD DOMESTIC WATER SOURCE FROM THE SOUTHWEST SITE NEW FIRE HYDRANT TO THE WEST SIDE OF THE DECK WITH A 2" REDUCED PRESSURE BACKFLOW PREVENTER, HOTBOX, DOMESTIC WATER BOOSTER PUMP, AND 2" DOMESTIC WATER MAIN STUBBED INTO THE DECK.

ALTERNATE NO. 3B: PROVIDE 2" PIPING AND TWO (2) HOSE CONNECTIONS ON LEVELS 1 THROUGH 5 AT EACH END OF RAMP.

ALTERNATE NO. 4: PROVIDE BRICK EDGE BANDING AT NEW SIDEWALKS AS INDICATED ON THE CIVIL PLANS.

ALTERNATE NO. 5: PROVIDE 304 STAINLESS STEEL STAIR RAILING IN LIEU OF HOT DIPPED GLAVANIZED.

VICINITY MAP:

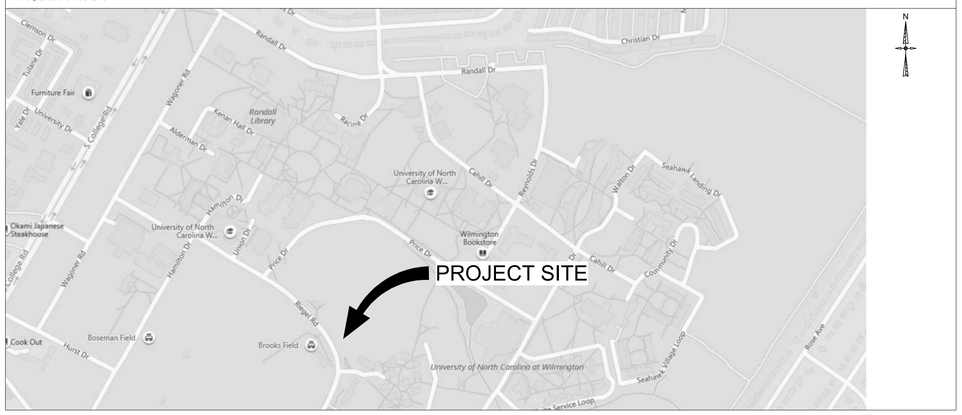

UNCW
UNIVERSITY of NORTH CAROLINA WILMINGTON
601 S COLLEGE ROAD
WILMINGTON, NORTH CAROLINA 28403

PARKING DECK II AND SURFACE PARKING (DESIGN-BUILD)
SOUTH CAMPUS - 4965 RIEGEL ROAD

SCO ID NUMBER: 18-19226-01A
CODE: 41828
ITEM: 301

CONTRACTOR
Balfour Beatty Construction

DESIGNER

CLARKNEXSEN
1523 ELIZABETH AVENUE, SUITE 300
CHARLOTTE, NORTH CAROLINA 28204
704·377·8800

CLARK NEXSEN LICENSE NUMBER: C-1028

WALKER CONSULTANTS
13860 Ballantyne Corporate Place
Suite 140
Charlotte, NC 28277
T: 704.247.6230
www.walkerconsultants.com
NC License No. F-0518

McKIM&CREED
CIVIL ENGINEER
243 NORTH FRONT STREET
WILMINGTON, NORTH CAROLINA
28401
910.343.1048

PROFESSIONAL SEAL

CLARK NEXSEN CERT NO. 50680 NORTH CAROLINA
PETER J. ARANYI REGISTERED ARCHITECT 8198 NORTH CAROLINA
NOT FOR CONSTRUCTION

NC CORPORATE ENGINEERING LICENSE #C-1028

SUBMITTAL

04/15/2019

CONSTRUCTION DOCUMENT SUBMITTAL 01

REVISIONS

KEY PLAN

SHEET

COVER SHEET AND DRAWING INDEX

G001

DESIGN: Designer
DRAWN: Author
REVIEW: Checker

CN 8112

4/15/2019 5:49:53 PM
C:\Revit Projects\8112_UNCW_Parking_Deck_II_A17_mrpurdy.rvt

2018 APPENDIX B
BUILDING CODE SUMMARY FOR ALL COMMERCIAL PROJECTS
(EXCEPT 1 AND 2-FAMILY DWELLINGS AND TOWNHOUSES)
(Reproduce the following data on the building plans sheet 1 or 2)

Name of Project: University of North Carolina - Wilmington Parking Deck II
Address: 601 South College Road Wilmington, North Carolina 28403
Owner/Authorized Agent: Lisa Seifert Phone #: (919) 962-7560 E-Mail: seifertl@uncw.edu

Owned By: ☐ City/County ☐ Private ■ State
Code Enforcement Jurisdiction: ☐ City ☐ County ■ State NC

CONTACT:

DESIGNER	FIRM	NAME	LICENSE #	PHONE #	E-MAIL
Architectural	Clark Nexsen	Gary Runions	7730	704.377.8800	grunions@clarknexsen.com
Civil	McKim&Creed	Richard Collier	22574	910.343.8976	rcollier@mckimcreed.com
Electrical	Clark Nexsen	Waleed Zoabi	27786	704.377.8800	waleed.zoabi@clarknexsen.com
Fire Alarm	Clark Nexsen	Kari Crane	41524	704.377.8800	kcrane@clarknexsen.com
Plumbing	Clark Nexsen	Anthony Brandon	23940	704.377.8800	abrandon@clarknexsen.com
Mechanical	Clark Nexsen	Dwayne Carr	34339	704.377.8800	dcarr@clarknexsen.com
Sprinkler-Standpipe	Clark Nexsen	Anthony Brandon	23940	704.377.8800	abrandon@clarknexsen.com
Structural	Walker Consultants	Joey Rowland	28007	704.247.6230	jrowland@walkerconsultants.com
Retailing Wall >5' High					
Other					

2018 EDITION OF NC CODE: ■ New Building ☐ Addition ☐ Renovation
☐ 1st Time Interior Completion
☐ Shell/Core - Contact the local inspection jurisdiction for possible additional procedures and requirements
☐ Phased Construction - Shell/Core - Contact the local inspection jurisdiction for possible additional procedures

2018 EDITION EXISTING BUILDING CODE: EXISTING: ☐ Prescriptive ☐ Repair ☐ Chapter 14
Alteration: ☐ Level I ☐ Level II ☐ Level III

CONSTRUCTED: (date) _____ **CURRENT OCCUPANCIES(S)**(Ch 3): _____
RENOVATED: (date) _____ **PROPOSED OCCUPANCIES(S)**(Ch 3): _____
RISK CATEGORY (Table 1604.5): **Current:** ☐ I ☐ II ☐ III ☐ IV
Proposed: ☐ I ☐ II ☐ III ☐ IV

BASIC BUILDING DATA

Construction Type: ☐ I-A ☐ II-A ☐ III-A ☐ IV ☐ V-A
■ I-B ☐ II-B ☐ III-B ☐ V-B

Sprinklers: ■ No ☐ Partial ☐ Yes ☐ NFPA 13 ☐ NFPA 13R ☐ NFPA 13D
Standpipes: ☐ No ■ Yes Class ■ I ☐ II ☐ III ☐ Wet ■ Dry
Fire District: ■ No ☐ Yes Flood Hazard Area: ☐ No ☐ Yes
Special Inspections Required: ☐ No ■ Yes (Contact the local inspection jurisdiction for additional procedures and requirements).

Gross Building Area Table

FLOOR	EXISTING (SQ FT)	NEW (SQ FT)	SUB-TOTAL
5th		61,245	
4th		66,410	
3rd		66,410	
2nd		66,410	
1st		67,524	
Total		327,999	

ALLOWABLE AREA

Primary Occupancy Classification(s) Select One Select One Select One Select One Select One Select One

Assembly ☐ A-1 ☐ A-2 ☐ A-3 ☐ A-4 ☐ A-5
Business ☐
Educational ☐
Factory ☐ F-1 Moderate ☐ F-2 Low
Hazardous ☐ H-1 Detonate ☐ H-2 Deflagrate ☐ H-3 Combust ☐ H-4 Health ☐ H-5 HPM
Institutional ☐ I-1 Condition ☐ 1 ☐ 2
☐ I-2 Condition ☐ 1 ☐ 2
☐ I-3 Condition ☐ 1 ☐ 2 ☐ 3 ☐ 4 ☐ 5
☐ I-4
Mercantile ☐
Residential ☐ R-1 ☐ R-2 ☐ R-3 ☐ R-4
Storage ☐ S-1 Moderate ■ S-2 Low ☐ High-piled
■ Parking Garage ■ Open ☐ Enclosed ☐ Repair Garage
Utility and Miscellaneous ☐

Accessory Occupancies Classification(s): N/A
Incidental Uses (Table 509): N/A
Special Uses (Chapter 4 - List Code Selections): Section 406: Motor Vehicle Related Occupancy
Special Provisions:(Chapter 5 - List Code Selections):
Mixed Occupancy: ■ No ☐ Yes Separation: _____ Hr. Exception: _____

☐ Non-Separated Use (508.3) - The required type of construction for the building shall be determined by applying the height and area limitations for each of the applicable occupancies to the entire building. The most restrictive type of construction, so determined, shall apply to the entire building.

☐ Separated Use (508.4) - See below for area calculations for each story, the area of the occupancy shall be such that the sum of the ratios of the actual floor area for each use shall not exceed 1.

$$\frac{\text{Actual Area of Occupancy A}}{\text{Allowable Area of Occupancy A}} + \frac{\text{Actual Area of Occupancy B}}{\text{Allowable Area of Occupancy B}} \leq 1$$

_____ + _____ + ... = _____ ≤ 1.00

STORY NO.	DESCRIPTION AND USE	(A)BLDG AREA PER STORY (ACTUAL)	(B) TABLE 506.2 AREA	(C) AREA FOR FRONTAGE INCREASE	(D) ALLOWABLE AREA PER STORY OR UNLIMITED
5	PARKING	61,245	UNLIMITED	-	UNLIMITED
4	PARKING	66,410	UNLIMITED	-	*
3	PARKING	66,410	UNLIMITED	-	*
2	PARKING	66,410	UNLIMITED	-	*
1	PARKING	67,524	UNLIMITED	-	*

*1 Frontage area increases from Section 506.2 are computed thus:
a. Perimeter which fronts a public way or open space having 20 feet minimum width = _____ (F)
b. Total Building Perimeter = _____ (P)
c. Ratio (F/P) = _____ (F/P)
d. W = Minimum width of public way = _____ (W)
e. Percent of frontage increase If = 100 [F/P - 0.25] x W/30 = _____ (%)
*2 Unlimited area applicable under conditions of Section 507.
*3 Maximum Building Area = total number of stories in the building x D (maximum 3 stories) (506.2)
*4 The maximum area of open public parking garages must comply with table 406.5.4.. The maximum area of air traffic control towers must comply with 412.3.1.
*5 Frontage increase is based on the unsprinklered area value in Table 506.2.

ALLOWABLE HEIGHT

	ALLOWABLE	SHOWN ON PLANS	CODE REFERENCE
Building Height in Feet (Table 504.3)	75'	46'-0" TO FIFTH LEVEL FINISHED FLOOR	406.5.4
Building Height Stories (Table 504.4)	12 TIERS	5 TIERS	406.5.4

Provide Code Reference if the "Shown on Plans" quantity is not based on Table 504.3 or 504.4

FIRE PROTECTION REQUIREMENTS

Building Element	FIRE SEPARATION DISTANCE (FEET)	RATING REQ'D	RATING PROVIDED (W/_____* REDUCTION)	DETAIL # AND SHEET #	DESIGN # FOR RATED ASSEMBLY	DESIGN # FOR RATED PENETRATION	DESIGN # FOR RATED JOINTS
Structural Frame, including columns, girders, trusses Structural Frame, including columns, girders, trusses							
Bearing Walls							
. Exterior		2					
. North		2					
. East		2					
. West		2					
. South		2					
. Interior		2					
Nonbearing Walls and Partitions		0					
. Exterior walls		0					
. North		0					
. East		0					
. West		0					
. South		0					
. Interior Walls and Partitions		0					
Floor Construction including supporting beams and joists		2					
Roof Construction including supporting beams and joists		2					
Floor Ceiling Assembly		2					
Column Supporting Floor		2					
Roof Construction including supporting beams and joists		2					
Roof Ceiling Assembly		1					
Columns Supporting Roof		2					
Shaft Enclosures - Exit		N/A					
Shaft Enclosures - Other		N/A					
Corridor Separation		N/A					
Occupancy/Fire Barrier Separation		N/A					
Smoke Barrier Separation		N/A					
Smoke Partitions		N/A					
Tenant/Dwelling Unit/Sleeping Unit Separation		N/A					
Incidental Use Separation		N/A					

* Indicate section number permitting reduction

PERCENTAGE OF WALL OPENING CALCULATIONS

FIRE SEPARATION DISTANCE (FEET) FROM PROPERTY LINE	DEGREE OF OPENINGS PROTECTION (TABLE 705.8)	ALLOWABLE AREA (%)	ACTUAL SHOWN ON PLANS (%)
30'	UNPROTECTED, NON-SPRINKLERED	NO LIMIT	50%

LIFE SAFETY SYSTEM REQUIREMENTS

Emergency Lighting: ■ No ☐ Yes
Exit Signs: ☐ No ■ Yes
Fire Alarm: ☐ No ■ Yes
Smoke Detection Systems: ■ No ☐ Yes ☐ Partial _____
Carbon Monoxide Detection: ■ No ☐ Yes

Life Safety Plan Sheet #: G100
☐ Fire and/or smoke rated wall locations (Chapter 7)
■ Assumed and real property line locations (if not on the site plan)
■ Exterior wall opening area with respect to distance to assumed property lines (705.8)
■ Occupancy Use for each area as it relates to occupant load calculation (Table 1004.1.2)
☐ Occupant loads for each area
■ Exit access travel distances (1017)
☐ Common path of travel distances (Tables 1006.2.1 & 1006.3.2(1))
☐ Dead end lengths (1020.4)
☐ Clear exit widths for each exit door
■ Maximum calculated occupant load capacity each exit door can accommodate based on egress width (1005.3)
■ Actual occupant load for each exit door (STAIR)
☐ A separate schematic plan indicating where fire rated floor/ceiling and/or roof structure is provided for purposes of occupancy separation
☐ Location of doors with panic hardware (1010.1.10)
☐ Location of doors with delayed egress locks and the amount of delay (1010.1.9.7)
☐ Location of doors with electromagnetic egress locks (1010.1.9.9)
☐ Location of doors equipped with hold-open devices
☐ Location of emergency escape windows (1030)
☐ The square footage of each fire area (202)
☐ The square footage of each smoke compartment for Occupancy Classification I-2 (407.5)
☐ Note any code exceptions or table notes that may have been utilized regarding the items above

ACCESSIBLE DWELLING UNITS
(SECTION 1107)

Total Units	Accessible Units Required	Type A Units Required	Type A Units Provided	Type B Units Required	Type B Units Provided	Total Accessible Units Provided
N/A	N/A	N/A	N/A	N/A	N/A	N/A

ACCESSIBLE PARKING
(SECTION 1106)

LOT OR PARKING AREA	TOTAL # OF PARKING SPACES Required	TOTAL # OF PARKING SPACES Provided	# OF ACCESSIBLE SPACES PROVIDED REGULAR WITH 5' ACCESS AISLE	VAN SPACES WITH 8' ACCESS AISLE	VAN SPACES WITH 11' ACCESS AISLE	TOTAL # ACCESSIBLE PROVIDED
GARAGE	N/A	1002	17	4		21
Grand total	0	0	0	0		0

SPECIAL APPROVALS
SPECIAL APPROVAL:(LOCAL JURISDICTION, DEPARTINENT OF INSURANCE, OSC, DPI, DHH5, etc. describe below)

PLUMBING FIXTURE REQUIREMENTS
(TABLE 2902.1)

USE	WATERCLOSETS MALE	WATERCLOSETS FEMALE	URINALS	LAVATORIES MALE	LAVATORIES FEMALE	SHOWERS /TUBS	DRINKING FOUNTAINS REGULAR	DRINKING FOUNTAINS ACCESSIBLE
EXISTING	N/A	N/A	N/A	N/A	N/A	N/A	N/A	N/A
NEW	N/A	N/A	N/A	N/A	N/A	N/A	N/A	N/A
REQUIRED	N/A	N/A	N/A	N/A	N/A	N/A	N/A	N/A

SPECIAL APPROVALS
Special Approval: (Local Jurisdiction, Department of Insurance, OSC, DPI, DHHS, etc., describe below)

ENERGY SUMMARY

ENERGY REQUIREMENTS:
The following data shall be considered minimum and any special attribute required to meet the energy code shall also be provided. Each Designer shall furnish the required portions of the project information for the plan data sheet. If performance method, state the annual energy cost for the standard reference design vs annual energy cost for the proposed design

Existing building envelope complies with code:

Exempt Building: ☐ NO ■ YES C101.2, EXCEPTION 2

Climate Zone: ☐ 3A ☐ 4A ☐ 5A

Method of Compliance: Energy Code ☐ Performance ☐ Prescriptive
ASHRAE 90.1 ☐ Performance ☐ Prescriptive
(if "Other" specify source here) _____

THERMAL ENVELOPE (Prescriptive method only)

Roof/ceiling Assembly
Description of assembly: _____
U-Value of total assembly: _____
R-Value of insulation: _____
Skylights in each assembly: _____
U-Value of skylight: _____
total square footage of skylights in each assembly: _____

Exterior Walls :
Description of assembly: _____
U-Value of total assembly: _____
R-Value of insulation: _____
Openings (windows or doors with glazing)
U-Value of assembly: _____
Solar heat gain coefficient: _____
projection factor: _____
Door R-Values: _____

Walls below grade (each assembly)
Description of assembly: _____
U-Value of total assembly: _____
R-Value of insulation: _____

Floors over unconditioned space (each assembly)
Description of assembly: _____
U-Value of total assembly: _____
R-Value of insulation: _____

Floors slab on grade (each assembly)
Description of assembly: _____
U-Value of total assembly: _____
R-Value of insulation: _____
Horizontal/vertical requirement: _____
slab heated: _____

2018 APPENDIX B
BUILDING CODE SUMMARY FOR ALL COMMERCIAL PROJECTS
STRUCTURAL DESIGN
(PROVIDE ON THE STRUCTURAL SHEETS IF APPLICABLE)

DESIGN LOADS:

Importance Factors:
Snow (I_S) 1.0
Seismic (I_E) 1.0

Live Loads:
Roof 20 psf
Mezzanine N/A psf
Floor 40 psf

Ground Snow Load: 10 psf

Wind Load: Basic Wind Speed 150 mph (ASCE-7)
Exposure Category B

SEISMIC DESIGN CATEGORY ☐ A ☐ B ■ C D
Provide the following Seismic Design Parameters:
RISK Category (Table 1604.5): ☐ I ■ II ☐ III ☐ IV ☐
Spectral Response Acceleration S_S 0.152 %g S_1 0.067 %g
Site Classification (Table 1613.5.2) ☐ A ☐ B ☐ C ■ D ☐ E ☐ F
Data Source: ☐ Field Test ☐ Presumptive ☐ Historical Data
Basic structural system (check one)
■ Bearing Wall ☐ Dual w/Special Moment Frame
☐ Building Frame ☐ Dual w/Intermediate R/C or Special Steel
☐ Moment Frame ☐ Inverted Pendulum
Analysis Procedure ☐ Simplified ■ Equivalent Lateral Force ☐ Dynamic
Architectural, Mechanical, Components anchored? ☐ Yes ■ No
LATERAL DESIGN CONTROL: Earthquake ■ Wind ☐

SOIL BEARING CAPACITIES:
Field Test (provide copy of test report) _____ psf
Presumptive Bearing capacity 4000 psf
Pile size, type, and capacity _____

2018 APPENDIX B
BUILDING CODE SUMMARY FOR ALL COMMERCIAL PROJECTS
ELECTRICAL DESIGN
(PROVIDE ON THE STRUCTURAL SHEETS IF APPLICABLE)

ELECTRICAL SUMMARY

ELECTRICAL SYSTEM AND EQUIPMENT

Method of Compliance: Energy Code ☐ Performance ■ Prescriptive
ASHRAE 90.1 ☐ Performance ☐ Prescriptive

Lighting Schedule (each fixture type)
lamp type required in fixture - SEE LUMINAIRE SCHEDULE
number of lamps in fixture - SEE LUMINAIRE SCHEDULE
ballast type used in fixture - SEE LUMINAIRE SCHEDULE
number of ballasts in fixture - SEE LUMINAIRE SCHEDULE
total wattage per fixture - SEE LUMINAIRE SCHEDULE
total interior wattage specified vs. allowed (whole building or space by space)
total exterior wattage specified vs. allowed

Additional Efficiency Package Options
(When using the 2018 NCECC; not required on ASHRAE 90.1)
☐ C406.2 More efficient HVAC Equipment Performance
■ C406.3 Reduced Lighting Power Density
■ C406.4 Enhanced digital lighting controls
☐ C406.5 On-site Renewable Energy
☐ C406.6 Dedicated Outdoor Air System
☐ C406.7 Reduced Energy Use in Service Water Heating

2018 APPENDIX B
BUILDING CODE SUMMARY FOR ALL COMMERCIAL PROJECTS
MECHANICAL DESIGN
(PROVIDE ON THE STRUCTURAL SHEETS IF APPLICABLE)

MECHANICAL SUMMARY

Thermal Zone
winter dry bulb: _____
summer dry bulb: _____

Interior design conditions
winter dry bulb: _____
summer dry bulb: _____
relative humidity: _____

Building heating load: _____
Building cooling load: _____

Mechanical Spacing Condition System
Unitary
description of unit: _____
heating efficiency: _____
cooling efficiency: _____
size category of unit: _____
Boiler
Size category. If oversized, state reason: _____
Chiller
Size category. If oversized, state reason: _____

Life equipment efficiencies: _____

UNCW
UNIVERSITY of NORTH CAROLINA WILMINGTON
601 S COLLEGE ROAD
WILMINGTON, NORTH CAROLINA 28403

PARKING DECK II AND SURFACE PARKING (DESIGN-BUILD)
SOUTH CAMPUS - 4965 RIEGEL ROAD

SCO ID NUMBER: 18-19226-01A
CODE: 41828
ITEM: 301

CONTRACTOR
Balfour Beatty Construction

DESIGNER

CLARKNEXSEN
1523 ELIZABETH AVENUE, SUITE 300
CHARLOTTE, NORTH CAROLINA 28204
704·377·8800
CLARK NEXSEN LICENSE NUMBER: C-1028

WALKER CONSULTANTS
13860 Ballantyne Corporate Place
Suite 140
Charlotte, NC 28277
T: 704.247.6230
www.walkerconsultants.com
NC License No. F-0518

McKIM&CREED
CIVIL ENGINEER
243 NORTH FRONT STREET
WILMINGTON, NORTH CAROLINA
28401
910.343.1048

PROFESSIONAL SEAL
NOT FOR CONSTRUCTION
CLARK NEXSEN CERT NO. 50680 NORTH CAROLINA
GARY T. RUNIONS REGISTERED ARCHITECT 7730 NORTH CAROLINA
NC CORPORATE ENGINEERING LICENSE #C-1028

SUBMITTAL
04/15/2019
CONSTRUCTION DOCUMENT SUBMITTAL 01

REVISIONS

KEY PLAN

SHEET
CODE COMPLIANCE ("APPENDIX B")

G002

DESIGN: Designer
DRAWN: Author
REVIEW: Checker

CN 8112

4/15/2019 5:41:35 PM
C:\Revit Projects\8112_UNCW_Parking_Deck_II_A17_rcpardy.rvt

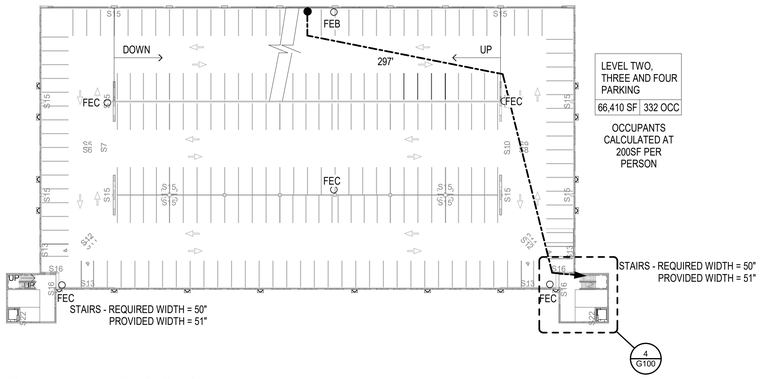

2 LIFE SAFETY PLAN - LEVELS 2 -4

1" = 40'-0"

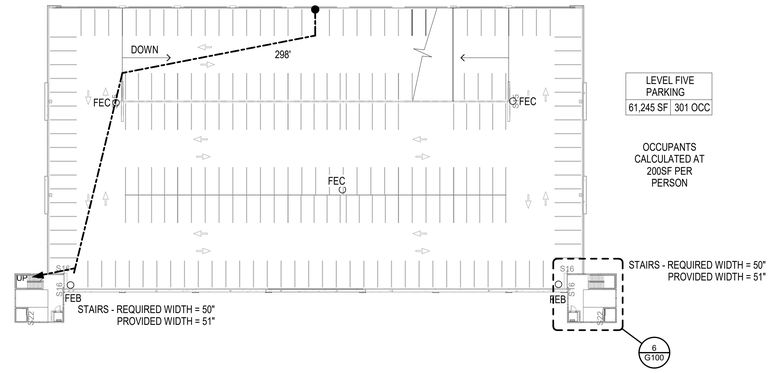

3 LIFE SAFETY PLAN - LEVEL 5

1" = 40'-0"

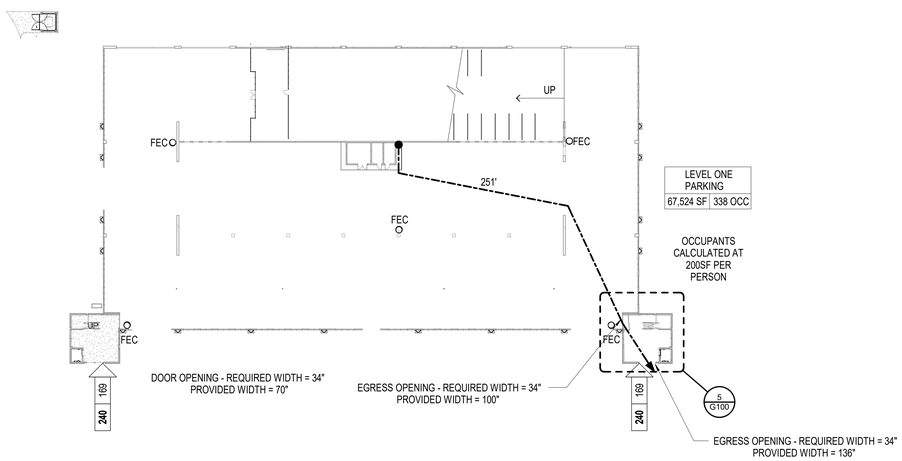

1 LIFE SAFETY PLAN - LEVEL 1

1" = 40'-0"

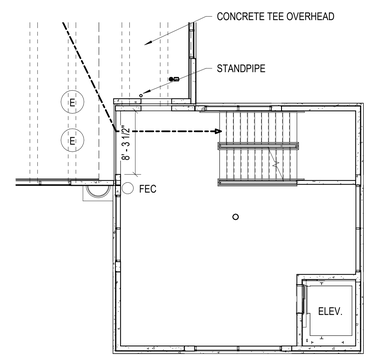

4 LIFE SAFETY PLAN - TYPICAL STAIR PLANS (LEVELS 2-4)

1/8" = 1'-0"

F	MANUAL FIRE ALARM PULL STATION
1A	EGRESS TRAVEL PATH AND LABEL
175 | 120	OCCUPANT LOAD EXIT CAPACITY (PEOPLE) OCCUPANT CAPACITY PROVIDED
E	EXIT SIGN
FEC	FIRE EXTINGUISHER CABINET
AREA NAME 400 SF | 20 OCC	AREA NAME AREA PER OCCUPANT, OCCUPANCY LOAD (PEOPLE)

LIFE SAFETY SYMBOL LEGEND

1/8" = 1'-0"

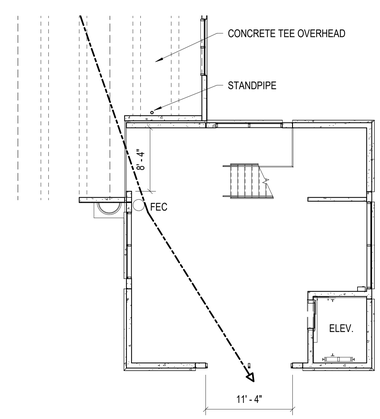

5 LIFE SAFETY PLAN - TYPICAL STAIR PLAN (LEVEL 1)

1/8" = 1'-0"

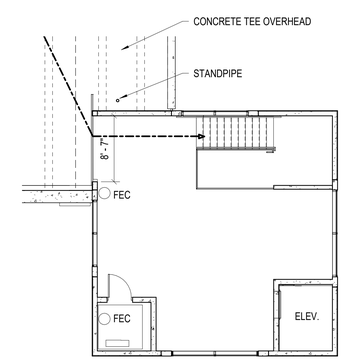

6 LIFE SAFETY PLAN - TYPICAL STAIR PLAN (LEVEL 5)

1/8" = 1'-0"

UNCW
UNIVERSITY of NORTH CAROLINA WILMINGTON
601 S COLLEGE ROAD
WILMINGTON, NORTH CAROLINA 28403

PARKING DECK II AND SURFACE PARKING (DESIGN-BUILD)
SOUTH CAMPUS - 4965 RIEGEL ROAD

SCO ID NUMBER: 18-19226-01A
CODE: 41828
ITEM: 301

CONTRACTOR
Balfour Beatty Construction

DESIGNER
CLARKNEXSEN
1523 ELIZABETH AVENUE, SUITE 300
CHARLOTTE, NORTH CAROLINA 28204
704·377·8800

CLARK NEXSEN LICENSE NUMBER: C-1028

WALKER CONSULTANTS
13860 Ballantyne Corporate Place
Suite 140
Charlotte, NC 28277
T: 704.247.6230
www.walkerconsultants.com
NC License No. F-0518

McKIM&CREED
CIVIL ENGINEER
243 NORTH FRONT STREET
WILMINGTON, NORTH CAROLINA
28401
910.343.1048

PROFESSIONAL SEAL
NOT FOR CONSTRUCTION
CLARK NEXSEN CERT NO. 50680 NORTH CAROLINA
GARY T. RUNTLONG REGISTERED ARCHITECT 7730 NORTH CAROLINA
NC CORPORATE ENGINEERING LICENSE #C-1028

SUBMITTAL
04/15/2019
CONSTRUCTION DOCUMENT SUBMITTAL 01

REVISIONS

KEY PLAN

SHEET
LIFE SAFETY PLANS

G100

DESIGN: Designer
DRAWN: Author
REVIEW: Checker

CN 8112

4/15/2019 5:41:43 PM
C:\Revit Projects\8112_UNCW_Parking_Deck_II_A17_mcpurdy.rvt

HDWR #1:

Butt Hinges: Heavy Weight; 4 ball bearing hinge 5BB1HW SS; hinge size: 5" x 5"; flat button tips with non-removable pins (NPR); finish to be BHMA 630 Satin Stainless Steel (US32D)

Locks and Latches: Grade 1 Mortise; cylinder lock on exterior side of door; latch bolt retracked by lever/knob inside or key outside; outside lever/knob is always inoperable; auxiliary latch deadlocks latch bolt when door is closed; inside lever/knob is always free for immediate access; finish to be BHMA 626 Satin Chromium Plated Bronze (US26D)

Levers: Pair with locks; must meet accessibly requirements; owner to select from manufacturer's standard designs; finish to be BHMA 630 Satin Stainless Steel (US32D)

Floor Stop: Dome stop; finish to be BHMA 626 Satin Chrome Plated Bronze (US26D)

Threshold: Half saddle threshold similar to Zero 655A; finish Mill Aluminum BHMA 628 (US28)

Weather-strips and Sweeps: Weather-strips to be similar to Zero 188S - EPDM rubber; Sweep to be similar Zero 39 (solid neoprene) – finish to be Mill Aluminum BHMA 628 (US28)

E

HDWR #2:

Butt Hinges: Heavy Weight; 4 ball bearing hinge 5BB1HW SS; hinge size: 5" x 5"; flat button tips with non-removable pins (NPR); finish to be BHMA 630 Satin Stainless Steel (US32D)

Locks and Latches: Grade 1 Mortise; cylinder lock on exterior side of door; provide mechanical multipoint similar to Schlage LM9280; outside lever retracts latch bolt only after inserting key and rotating 280 degrees; inside lever/knob is always free for immediate access; finish to be BHMA 626 Satin Chromium Plated Bronze (US26D)

Levers: Pair with locks; must meet accessibly requirements; owner to select from manufacturer's standard designs; finish to be BHMA 630 Satin Stainless Steel (US32D)

Floor Stop: Dome stop; finish to be BHMA 626 Satin Chrome Plated Bronze (US26D)

Threshold: Half saddle threshold similar to Zero 655A; finish Mill Aluminum BHMA 628 (US28)

Weather-strips and Sweeps: Weather-strips to be similar to Zero 188S - EPDM rubber; Sweep to be similar Zero 39 (solid neoprene) – finish to be Mill Aluminum BHMA 628 (US28)

Meeting Stiles: Astragal to be similar to Zero 905; finish Satin Aluminum Clear Anodized 628 (US28)

D

HDWR #3

Butt Hinges: Standard Weight; 4 ball bearing hinge 5BB1 SS; hinge size: 4 1/2" x 4 1/2"; flat button tips with non-rising pins; finish to be BHMA 652 Satin Chrome (US26D)

Locks and Latches: Grade 1 Mortise; cylinder lock on exterior side of door; latch bolt retracked by lever/knob inside or key outside; outside lever/knob is always inoperable; auxiliary latch deadlocks latch bolt when door is closed; inside lever/knob is always free for immediate access; finish to be BHMA 626 Satin Chromium Plated Bronze (US26D)

Levers: Pair with locks; must meet accessibly requirements; owner to select from manufacturer's standard designs; finish to be BHMA 626 Satin Chrome (US32D)

Floor Stop: Dome stop; finish to be BHMA 626 Satin Chrome Plated Bronze (US26D)

See Specifications for information on Campus Standards for Keying.

C

DOOR SCHEDULE											
DOOR NUMBER	ROOM NAME	DOOR TYPE	DOOR WIDTH	DOOR HEIGHT	DOOR MATERIAL	FRAME TYPE	FRAME MATERIAL	HEAD DETAIL	JAMB DETAIL	HARDWARE SET	COMMENTS
E105	SECURITY ROOM	D1	3'-0"	7'-0"	HM	F1	HM	H1	J1	HDWR #1	
E106	TELECOM ROOM	D1	3'-0"	7'-0"	HM	F1	HM	H1	J1	HDWR #1	
E1104	ELECTRICAL ROOM	D1	6'-0"	7'-0"	HM	F1	HM	H1 SIMILAR	J1 SIMILAR	HDWR #3	
5102	ELEVATOR CONTROL ROOM	D1	3'-0"	7'-0"	HM	F1	HM	H1 SIMILAR	J1 SIMILAR	HDWR #3	ALUM THRESHOLD, WEATHER STRIPPING AND SWEEPS ON BOTTOM
5102	ELEVATOR CONTROL ROOM	D1	3'-0"	7'-0"	HM	F1	HM	H1 SIMILAR	J1 SIMILAR	HDWR #3	ALUM THRESHOLD, WEATHER STRIPPING AND SWEEPS ON BOTTOM

LEGEND:

HM - HOLLOW METAL
HDWR - HARDWARE

NOTE: CLOSERS ARE TO BE MOUNTED ON INTERIOR SIDE OF ROOM REGARDLESS OF PULL DIRECTION.

B

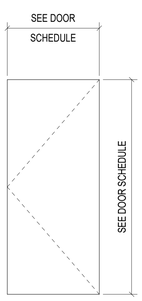

D1

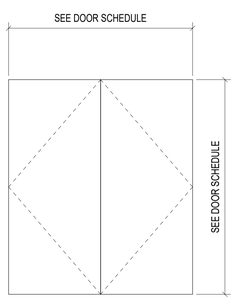

D2

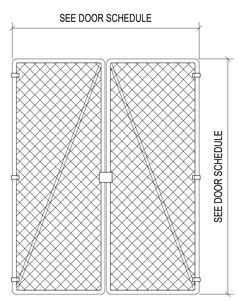

INSTALL BRACKETS, LATCHES AND ADAPTERS PER FENCING MANUFACTURER INSTRUCTIONS

107A GATE

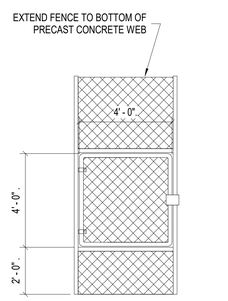

INSTALL BRACKETS, LATCHES AND ADAPTERS PER FENCING MANUFACTURER INSTRUCTIONS

107B GATE

DOOR TYPES

1/4" = 1'-0"

NOTE: ALL HOLLOW METAL DOORS ARE TO BE INSULATED

A

P TYPE PARTITIONS

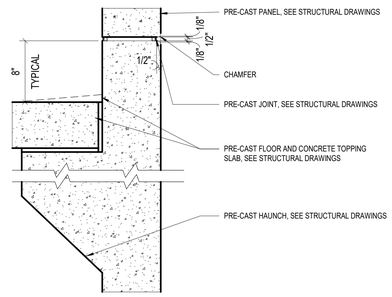

0P8	FIRE RATING 0HR	TESTING N/A	STC N/A	8" PRE-CAST PANEL
0P6	FIRE RATING 0 HR	TESTING N/A	STC N/A	6" PRE-CAST PANEL

M TYPE PARTITIONS

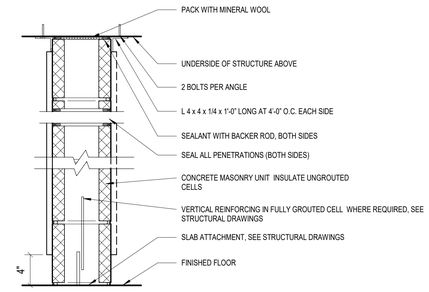

0M8	FIRE RATING 0HR	TESTING N/A	STC N/A	8" CONCRETE MASONRY UNIT
0M81	FIRE RATING 0 HR	TESTING N/A	STC N/A	8" CONCRETE MASONRY UNIT LAYER OF 3/4" FIRE-TREATED PLYWOOD ON ONE SIDE
0M82	FIRE RATING 0 HR	TESTING N/A	STC N/A	8" CONCRETE MASONRY UNIT LAYER OF 3/4" FIRE-TREATED PLYWOOD ON EACH SIDE

O SERIES PARTITIONS

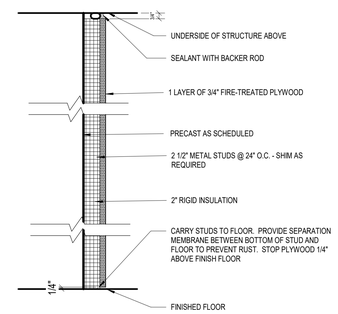

0C0	FIRE RATING 0 HR	TEST NO. N/A	STC N/A	2X4 FIRE-TREATED WOOD BLOCKING @ 24" O.C.

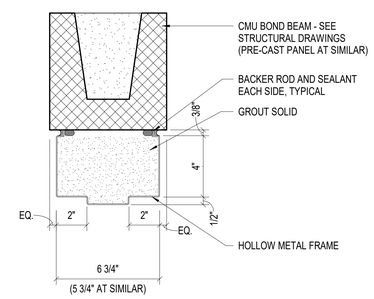

H1

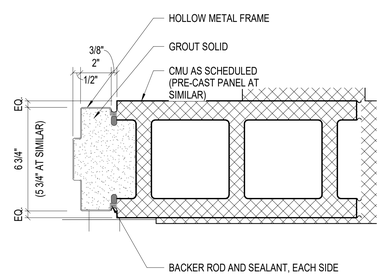

J1

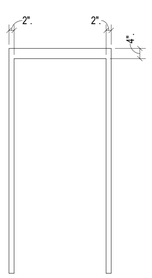

F1

FRAME TYPES

1/4" = 1'-0"

GENERAL PARTITION NOTES

A. ALL PARTITIONS EXTEND TO UNDERSIDE OF STRUCTURE UNLESS OTHERWISE NOTED.

B. CEILING HEIGHTS AND LOCATION MAY VARY AT PARTITIONS; CONCRETE MASONRY UNITS AND PLYWOOD WILL BE CUT TO MATCH UNDERSIDE OF STRUCTURE UNLESS NOTED OTHERWISE.

PARTITION LEGEND

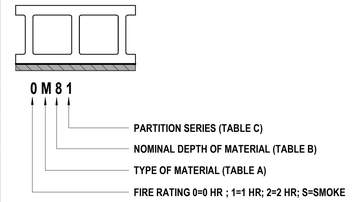

TABLE A - MATERIAL TYPES

TYPE	MATERIAL
C	3/4" FIRE-TREATED PLYWOOD
M	CONCRETE MASONRY UNIT

TABLE B- FRAMING DEPTH SCHEDULE

DEPTH OF MATERIAL	
0	2X4 NOMINAL FIRE TREATED WOOD BLOCKING AT 24" O.C., TYPICAL AND SHIMS AS REQUIRED WITH 2" RIGID INSULATION
8	8" NOMINAL CONCRETE MASONRY UNITS - INJECTED WITH FOAM INSULATION

TABLE C - PARTITION SERIES CONSTRUCTION ASSEMBLY

SERIES	PLYWOOD
1	1 - LAYER OF PLYWOOD ON ROOM SIDE OF CMU
2	1 - LAYER OF PLYWOOD ON EACH SIDE OF CMU

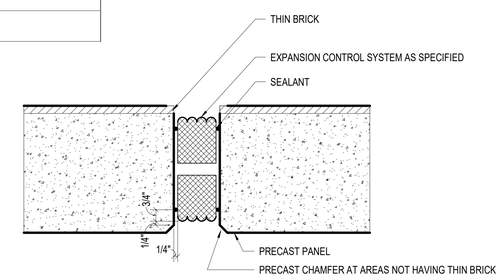

NOTE: REFER TO MANUFACTURER'S RECOMMENDATIONS FOR INSTALLATION

EXPANSION CONTROL SYSTEM - PLAN VIEW

3" = 1'-0"

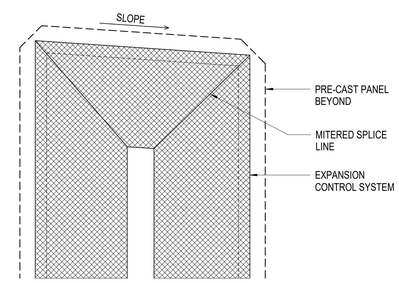

REFER TO MANUFACTURER'S RECOMMENDATIONS FOR INSTALLATION

SECTION VIEW TOP OF PRECAST - EXPANSION CONTROL SYSTEM

NOT TO SCALE

UNCW
UNIVERSITY of NORTH CAROLINA WILMINGTON
601 S COLLEGE ROAD
WILMINGTON, NORTH CAROLINA 28403

PARKING DECK II AND SURFACE PARKING (DESIGN-BUILD)
SOUTH CAMPUS - 4965 RIEGEL ROAD

SCO ID NUMBER: 18-19226-01A
CODE: 41828
ITEM: 301

CONTRACTOR
Balfour Beatty Construction

DESIGNER

CLARKNEXSEN
1523 ELIZABETH AVENUE, SUITE 300
CHARLOTTE, NORTH CAROLINA 28204
704·377·8800
CLARK NEXSEN LICENSE NUMBER: C-1028

WALKER CONSULTANTS
13860 Ballantyne Corporate Place
Suite 140
Charlotte, NC 28277
T: 704.247.6230
www.walkerconsultants.com
NC License No. F-0518

McKIM&CREED
CIVIL ENGINEER
243 NORTH FRONT STREET
WILMINGTON, NORTH CAROLINA
28401
910.343.1048

PROFESSIONAL SEAL

NOT FOR CONSTRUCTION

NC CORPORATE ENGINEERING LICENSE #C-1028

SUBMITTAL

04/15/2019

CONSTRUCTION DOCUMENT SUBMITTAL 01

REVISIONS

KEY PLAN

SHEET

DOOR SCHEDULE, PARTITION TYPES AND DETAILS

G101

DESIGN: Designer
DRAWN: Author
REVIEW: Checker

CN 8112

4/15/2019 5:41:46 PM
C:\Revit Projects\8112_UNCW_Parking_Deck_II_A17_nsparty.rvt

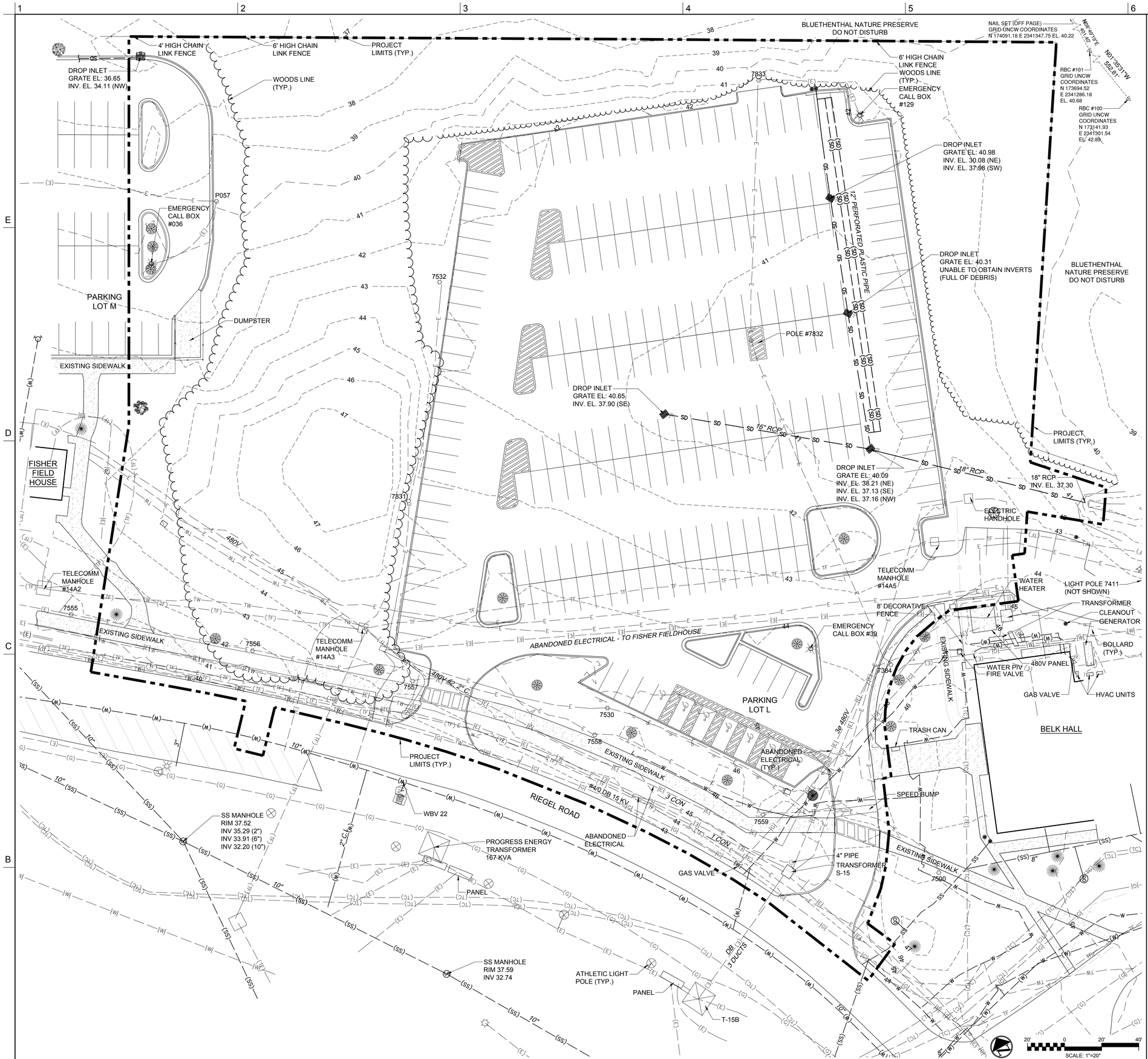

GIS LEGEND

- STORM DRAIN
- SANITARY SEWER
- WATER
- WATER ABANDONED
- UNDERGROUND ELECTRICAL
- UNDERGROUND ELECTRICAL ABANDONED
- GAS
- GAS ABANDONED
- TELECOM COPPER
- TELECOM FIBER
- TIME WARNER CABLE
- SANITARY SEWER CLEANOUT
- FDC CONNECTION
- FIRE HYDRANT
- PARKING LOT POLE LIGHT
- SIDEWALK POLE LIGHT
- BLUE LIGHT CALL BOX
- ATHLETIC FIELD POLE LIGHT
- GAS METER
- FUEL TANK
- GAS VALVE
- ATHLETIC FIELD POLE LIGHT

SURVEY LEGEND

- CENTERLINE DITCH/SWALE
- CHAIN LINK FENCE
- ORNAMENTAL FENCE
- TREE LINE
- STORM DRAIN PIPE
- WATER LINE
- SANITARY SEWER LINE
- UNDERGROUND POWER
- GAS LINE
- TELECOM FIBER
- TELECOM COPPER
- TIME WARNER CABLE
- IRRIGATION
- UTILITY DUCT BANK UNDERGROUND
- UNKNOWN UTILITY UNDERGROUND
- MAJOR CONTOUR
- MINOR CONTOUR
- TELEPHONE PEDESTAL
- FIRE HYDRANT
- WATER METER
- WATER METER
- LIGHT POLE
- POWER POLE
- GAS VALVE
- CLEANOUT
- SIGN
- DROP INLET
- CURB INLET
- CEDAR
- CHERRY
- CRAPE
- BEECH
- OAK
- MAGNOLIA
- MAPLE
- PINE
- MISC HARDWOOD

NOTES

1. EXISTING CONDITIONS PROVIDED VIA:
   - SURVEY PREPARED BY MCKIM AND CREED NOVEMBER 21, 2018
   - SURVEY PREPARED BY CAPE FEAR ENGINEERING AUGUST 03, 2017
   - CAMPUS GIS INFORMATION PREPARED BY UNCW STAFF, 03 AUGUST 2018
2. VERTICAL CONTROL BASED ON NAVD 88 (VERIFIED BY CFE). HORIZONTAL CONTROL BASED ON CONTROL MONUMENTS PROVIDED BY UNCW (NC GRID NAD 83).

UNCW
UNIVERSITY of NORTH CAROLINA WILMINGTON
601 S COLLEGE ROAD
WILMINGTON, NORTH CAROLINA 28403

PARKING DECK II AND SURFACE PARKING (DESIGN-BUILD)
SOUTH CAMPUS - 4965 RIEGEL ROAD

SCO ID NUMBER: 18-19226-01A
CODE: 441828
ITEM: 301

CONTRACTOR
Balfour Beatty Construction

DESIGNER

CLARKNEXSEN
1523 ELIZABETH AVENUE, SUITE 300
CHARLOTTE, NORTH CAROLINA 28204
704·377·8800
CLARK NEXSEN LICENSE NUMBER: C-1028

CONSULTANTS

WALKER CONSULTANTS
13860 Ballantyne Corporate Place
Suite 140
Charlotte, NC 28277
T: 704.247.6230
www.walkerconsultants.com
NC License No. F-0518

McKIM&CREED
CIVIL ENGINEER
243 NORTH FRONT STREET
WILMINGTON, NORTH CAROLINA
28401
910.343.1048

CORPORATE SEAL

PROFESSIONAL SEAL

SUBMITTAL
04/15/2019
CONSTRUCTION DOCUMENT SUBMITTAL 01

REVISIONS

KEY PLAN

SHEET
EXISTING CONDITIONS

CX100

DESIGN: TRC
DRAWN: TRC
REVIEW: RMC

8/8/2018 4:16:18 PM
S:\495900\018\0-Drawings\CX100_495900016.dwg

A | 2 | EXISTING CONDITIONS — SCALE: 1" = 20'

1 | LEGEND/NOTES — SCALE: NTS

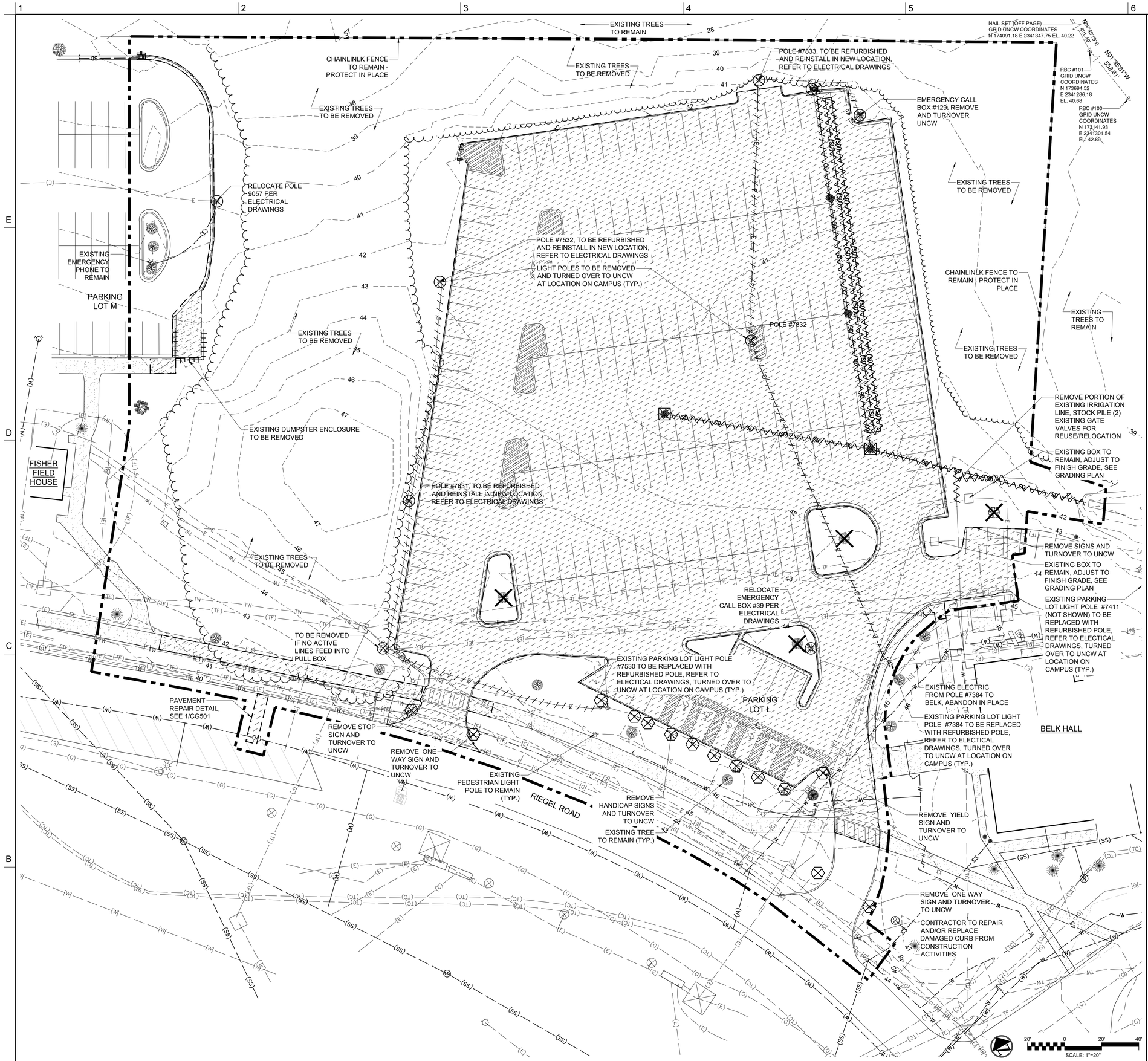

DEMO LEGEND

- HARDSCAPE TO BE REMOVED
- DRY-UTILITY TO BE REMOVED
- WET-UTILITY TO BE REMOVED
- CONSTRUCTION FENCE
- FENCE OR WALL TO BE REMOVED
- DRY-UTILITY STRUCTURE TO BE REMOVED
- WET-UTILITY STRUCTURE TO BE REMOVED
- SIGN OR OTHER MISC TO BE REMOVED
- PROTECTED TREE TO BE REMOVED

UNCW STOCKPILING OF MATERIALS:

CONTRACTOR TO STOCKPILE SITE LIGHTING POLES/FIXTURES, CALL BOXES AND SIGNS, AND RETURN TO OWNER.

NOTES

1. THE SUBGRADE PREPARATION SHOULD CONSIST OF STRIPPING ALL VEGETATION, ROOTMAT, TOPSOIL, EXISTING FILL, EXISTING FOOTING AND PAVEMENT, AND ANY OTHER SOFT OR UNSUITABLE MATERIALS FROM THE 10-FOOT EXPANDED BUILDING FOOT PRINTS AND 5-FOOT EXPANDED PAVEMENT LIMITS AND TO 5 FEET BEYOND THE TOE OF STRUCTURAL FILLS. ECS SHOULD BE CALLED ON TO VERIFY THAT TOPSOIL AND UNSUITABLE SURFICIAL MATERIALS HAVE BEEN COMPLETELY REMOVED PRIOR TO THE PLACEMENT OF STRUCTURAL FILL OR CONSTRUCTION OF THE ROADWAYS. EXISTING ABC STONE ON THE SITE CAN BE STOCKPILED FOR RE-USE. EXISTING ASPHALT GROUND DOWN TO AN ABC GRADATION AND USED IN LIFTS OF 4 INCHES BELOW THE ABC STONE AT THE SITE.
2. ALL EXISTING VEGETATION IS TO REMAIN UNLESS OTHERWISE INDICATED.
3. ALL AREAS OUTSIDE THE DISTURBED AREA IMPACTED DURING CONSTRUCTION SHALL BE RESTORED TO ITS PRE-CONSTRUCTION CONDITION OR BETTER.
4. WHERE REMOVING EXISTING UNDERGROUND ELECTRIC OR TELECOM, REMOVE CONDUCTORS AND AND CABLES BACK TO POINT OF CONNECTION TO ACTIVE CIRCUIT. UNUSED EMPTY UNDERGROUND CONDUIT MAY BE ABANDONED IN PLACE.
5. THE CONTRACTOR IS RESPONSIBLE FOR HAVING ALL EXISTING UTILITIES LOCATED PRIOR TO BEGINNING ANY DEMOLITION. CONTRACTOR SHALL CONTACT NC 811 AT LEAST 72 HOURS PRIOR TO BEGINNING CONSTRUCTION OR EXCAVATION TO HAVE EXISTING UTILITIES LOCATED. THE CONTRACTOR IS RESPONSIBLE FOR ACQUIRING A UNCW DIG PERMIT BEFORE UTILITY LOCATION.

2 DEMOLITION AND TREE REMOVAL PLAN — SCALE: 1" = 20'

1 LEGEND/NOTES — SCALE: NTS

UNCW
UNIVERSITY of NORTH CAROLINA WILMINGTON
601 S COLLEGE ROAD
WILMINGTON, NORTH CAROLINA 28403

PARKING DECK II AND SURFACE PARKING (DESIGN-BUILD)
SOUTH CAMPUS - 4965 RIEGEL ROAD

SCO ID NUMBER: 18-19226-01A
CODE: 441828
ITEM: 301

CONTRACTOR
Balfour Beatty Construction

DESIGNER

CLARKNEXSEN
1523 ELIZABETH AVENUE, SUITE 300
CHARLOTTE, NORTH CAROLINA 28204
704·377·8800
CLARK NEXSEN LICENSE NUMBER: C-1028

CONSULTANTS

WALKER CONSULTANTS
13860 Ballantyne Corporate Place
Suite 140
Charlotte, NC 28277
T: 704.247.6230
www.walkerconsultants.com
NC License No. F-0518

McKIM&CREED
CIVIL ENGINEER
243 NORTH FRONT STREET
WILMINGTON, NORTH CAROLINA
28401
910.343.1048

CORPORATE SEAL

PROFESSIONAL SEAL
NOT FOR CONSTRUCTION
NORTH CAROLINA PROFESSIONAL ENGINEER SEAL 22975 RICHARD M. COLLINSON

SUBMITTAL
04/15/2019
CONSTRUCTION DOCUMENT SUBMITTAL 01

REVISIONS

KEY PLAN

SHEET
DEMOLITION AND TREE REMOVAL PLAN

CD100

DESIGN: TRC
DRAWN: TRC
REVIEW: RMC

8/8/2018 4:16:18 PM
S:\4999\00016\BD-Drawings\CD100_49990016.dwg

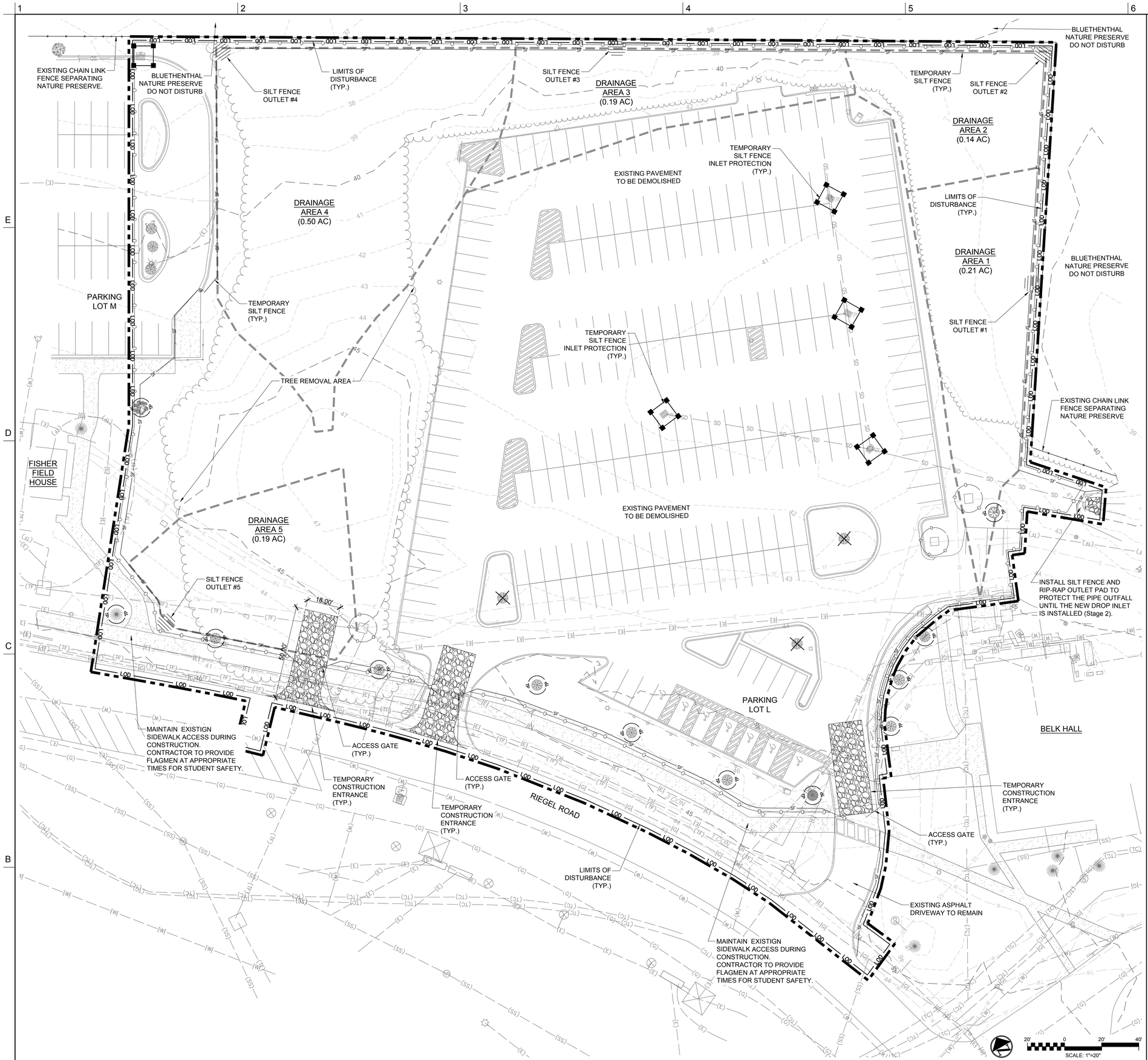

EROSION CONTROL LEGEND

- LOD — LIMITS OF DISTURBANCE
- SF — SECURITY FENCE
- SF — SILT FENCE
- TP — TREE PROTECTION FENCE
- TDD — TEMPORARY DIVERSION DIKE
- 40 — EXISTING MAJOR CONTOUR
- 39 — EXISTING MINOR CONTOUR
- INLET PROTECTION
- SILT FENCE OUTLET
- CONSTRUCTION ENTRANCE
- TREES TO REMOVE

EXISTING TREE LEGEND

- CEDAR
- CHERRY
- CRAPE
- BEECH
- OAK
- MAGNOLIA
- MAPLE
- PINE
- MISC HARDWOOD

GENERAL NOTE:

ALL AREAS OUTSIDE THE DISTURBED AREA THAT MAY BE IMPACTED DURING CONSTRUCTION SHOULD HAVE GRASS, SIDEWALK, AND OTHER ITEMS RESTORED TO LIKE CONSTRUCTION.

CONSTRUCTION SEQUENCE

1. REMOVE EXISTING CURBING, CONCRETE, AND ASPHALT REQUIRED TO INSTALL TEMPORARY CONSTRUCTION ENTRANCES. INSTALL CONSTRUCTION ENTRANCES, SILT FENCING, AND SECURITY FENCING.
2. CLEAR/DEMOLISH MINIMUM AMOUNT OF EXISTING VEGETATION AND INFRASTRUCTURE NECESSARY FOR INSTALLATION OF TEMPORARY EROSION CONTROL MEASURES.
3. INSTALL INLET PROTECTION AROUND EXISTING INLETS WITHIN THE LOD AND MAINTAIN THEM UNTIL THEY AND THE EXISTING STORMWATER PIPES ARE REMOVED.
4. BEGIN DEMOLITION OF EXISTING INFRASTRUCTURE WITHIN THE LIMITS OF DISTURBANCE.
5. WHEN REMOVING EXISTING STORM DRAINS WORK FROM DOWNSTREAM TO UPSTREAM, REMOVING PIPES, INLETS AND INLET PROTECTION.
6. WHERE PARKING LOTS ARE BEING DEMOLISHED, BEGIN PAVEMENT REMOVAL ON THE HIGH SIDE OF THE PARKING AREA WORKING TOWARDS INLET PROTECTION DEVICES. STABILIZE AREA OF PAVEMENT REMOVAL IN ACCORDANCE WITH SEEDING SPECIFICATIONS PRIOR TO REMOVAL OF INLET PROTECTION.
7. CONTRACTOR TO MAINTAIN E/C MEASURES PER NCDEQ RULES AND REGULATIONS.
8. EXISTING STUDENT WALKWAYS ALONG RIEGEL ROAD SHALL BE MAINTAINED THROUGHOUT CONSTRUCTION TO ALLOW STUDENT CIRCULATION. CONTRACTOR TO REPAIR ANY PORTIONS OF WALKWAY DAMAGED FROM CONSTRUCTION ACTIVITIES.
9. CONTRACTOR IS PERMITTED TO RELOCATE CONSTRUCTION FENCING ACCORDING TO THEIR CONSTRUCTION SEQUENCE, AND BY REQUESTS OR REQUIREMENTS BY UNCW. EROSION CONTROL MEASURES MUST BE IN PLACE AND OPERATIONAL.

SITE DATA AND CALCULATIONS:

SITE COORDINATES

LAT: 34°13'22.15"N
LONG: 77°52'18.64"W

DISTURBED AREA

TOTAL DISTURBED AREA = 4.45 AC.(193,842 SF)

STAGE 1 SILT FENCE				
SILT FENCE OUTLET NO.	DRAINAGE AREA	LENGTH	ACRE	0.25 ACRE PER 100 FT
	(ACRES)	(FT)	(PER 100 FT)	(YES/NO)
SFO #1	0.21	152	0.14	YES
SFO #2	0.14	158	0.09	YES
SFO #3	0.19	167	0.12	YES
SFO #4	0.50	271	0.18	YES
SFO #5	0.19	121	0.16	YES

UNCW
UNIVERSITY of NORTH CAROLINA WILMINGTON
601 S COLLEGE ROAD
WILMINGTON, NORTH CAROLINA 28403

PARKING DECK II AND SURFACE PARKING (DESIGN-BUILD)
SOUTH CAMPUS - 4965 RIEGEL ROAD

SCO ID NUMBER: 18-19226-01A
CODE: 441828
ITEM: 301

CONTRACTOR
Balfour Beatty Construction

DESIGNER

CLARKNEXSEN
1523 ELIZABETH AVENUE, SUITE 300
CHARLOTTE, NORTH CAROLINA 28204
704·377·8800
CLARK NEXSEN LICENSE NUMBER: C-1028

CONSULTANTS

WALKER CONSULTANTS
13860 Ballantyne Corporate Place
Suite 140
Charlotte, NC 28277
T: 704.247.6230
www.walkerconsultants.com
NC License No. F-0518

McKIM&CREED
CIVIL ENGINEER
243 NORTH FRONT STREET
WILMINGTON, NORTH CAROLINA
28401
910.343.1048

CORPORATE SEAL

PROFESSIONAL SEAL
NOT FOR CONSTRUCTION
NORTH CAROLINA PROFESSIONAL SEAL 22915 ENGINEER EDWARD M. COLLINS

SUBMITTAL
04/15/2019
CONSTRUCTION DOCUMENT SUBMITTAL 01

REVISIONS

KEY PLAN

SHEET
EROSION CONTROL - STAGE 1

CE101

DESIGN: TRC
DRAWN: TRC
REVIEW: RMC

8/9/2018 4:16:18 PM
S:\49990016\80-Drawings\CE101_49990016.dwg

A 2 EROSION CONTROL - STAGE 1 SCALE: 1" = 20'

1 LEGEND/NOTES SCALE: NTS

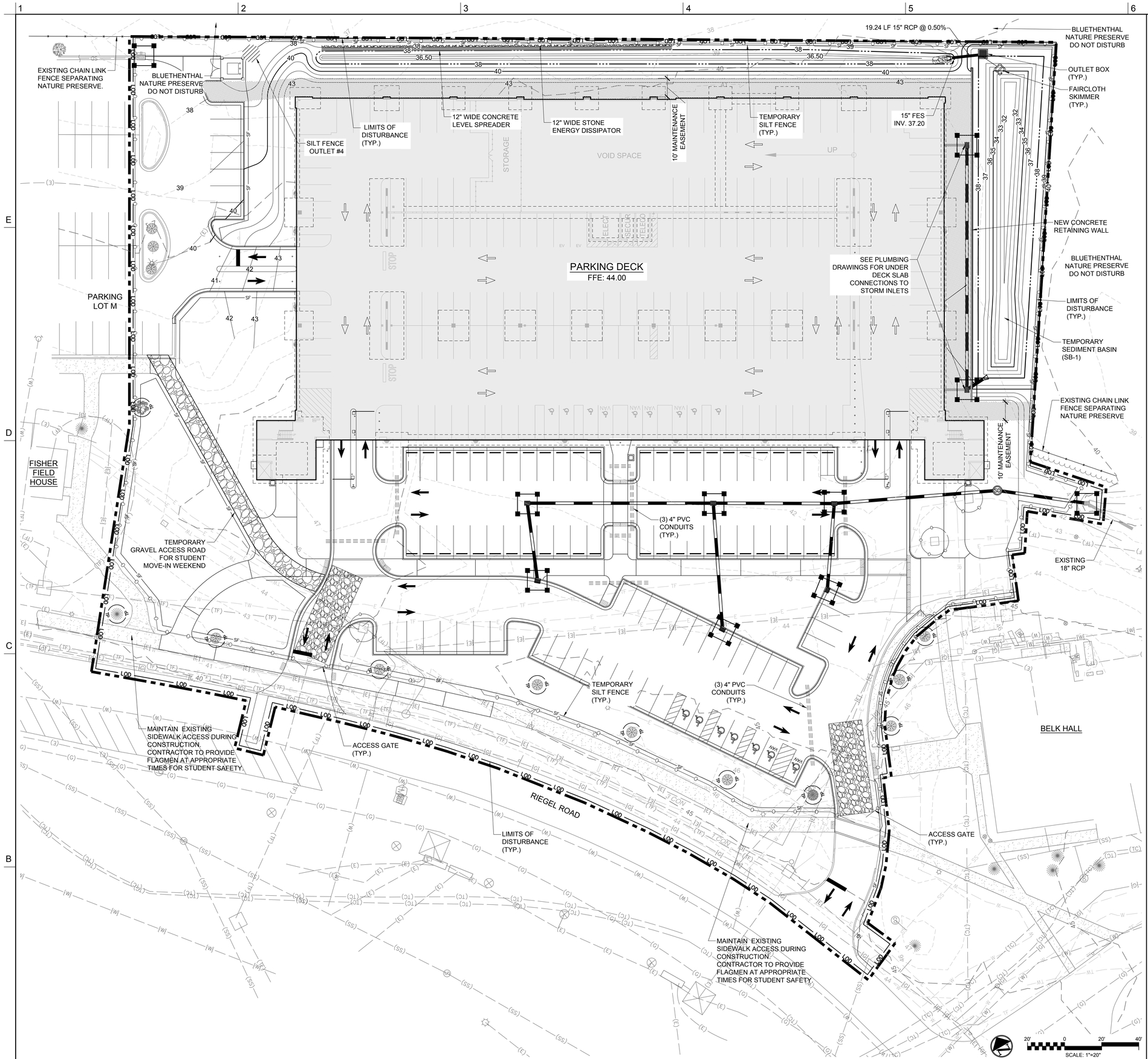

EROSION CONTROL LEGEND

- LOD — LIMITS OF DISTURBANCE
- SECURITY FENCE
- SF — SILT FENCE
- TP — TREE PROTECTION FENCE
- TDD — TEMPORARY DIVERSION DIKE
- 40 — EXISTING MAJOR CONTOUR
- 39 — EXISTING MINOR CONTOUR
- INLET PROTECTION
- SILT FENCE OUTLET
- CONSTRUCTION ENTRANCE
- SEDIMENT BASIN WITH FAIRCLOTH SKIMMER

EXISTING TREE LEGEND

- CEDAR
- CHERRY
- CRAPE
- BEECH
- OAK
- MAGNOLIA
- MAPLE
- PINE
- MISC HARDWOOD

GENERAL NOTE:

ALL AREAS OUTSIDE THE DISTURBED AREA THAT MAY BE IMPACTED DURING CONSTRUCTION SHOULD HAVE GRASS, SIDEWALK, AND OTHER ITEMS RESTORED TO LIKE CONSTRUCTION.

CONSTRUCTION SEQUENCE

1. BEGIN DEMOLITION OF EXISTING PARKING LOT AND INFRASTRUCTURE AS SHOWN ON THE DEMOLITION PLAN. PAVEMENT REMOVAL SHOULD PROGRESS FROM HIGH SIDE OF THE PARKING AREA WORKING TOWARDS INLET PROTECTION DEVICES.
2. WHEN REMOVING EXISTING STORM DRAINS WORK FROM DOWNSTREAM TO UPSTREAM, REMOVING PIPES, INLETS AND INLET PROTECTION.
3. CONTRACTOR TO MAINTAIN E/C MEASURES PER NCDEQ RULES AND REGULATIONS.
4. PROVIDE INLET PROTECTION FOR ALL NEW INLETS IMMEDIATELY FOLLOWING INSTALLATION.
5. EXISTING STUDENT WALKWAYS ALONG RIEGEL ROAD SHALL BE MAINTAINED THROUGHOUT CONSTRUCTION TO ALLOW STUDENT CIRCULATION. CONTRACTOR TO REPAIR ANY PORTIONS OF WALKWAY DAMAGED FROM CONSTRUCTION ACTIVITIES.
6. CONTRACTOR IS PERMITTED TO RELOCATE CONSTRUCTION FENCING ACCORDING TO THEIR CONSTRUCTION SEQUENCE, AND BY REQUESTS OR REQUIREMENTS BY UNCW. EROSION CONTROL MEASURES MUST BE IN PLACE AND OPERATIONAL.
7. EXCAVATE SCM-1 AND LS-1.
8. INSTALL RETAINING WALL AND STORM DRAINAGE SYSTEM.
9. INSTALL 185 LF CONCRETE LEVEL SPREADER WITH #57 STONE ENERGY DISSIPATOR THAT IS 12-INCHES WIDE BY 6-INCHES DEEP DOWNSTREAM OF THE LEVEL SPREADER LIP.

SITE DATA AND CALCULATIONS:

SITE COORDINATES

LAT: 34°13'22.15"N
LONG: 77°52'18.64"W

DISTURBED AREA

TOTAL DISTURBED AREA = 4.45 AC.(193,842 SF)

TEMPORARY SEDIMENT BASIN (SB-1)

DA = 1.52 AC (66,193 SF)

LEVEL SPREADER (LS-1)

LS-1 (SEE DETAIL ON CG-503)

Q_{10} = 5.695 CFS X 10 LF
= 57 LF (REQ'D)
= 189 LF (PROVIDED)

STAGE 2 SILT FENCE				
SILT FENCE OUTLET NO.	DRAINAGE AREA	LENGTH	ACRE	0.25 ACRE PER 100 FT
	(ACRES)	(FT)	(PER 100 FT)	(YES/NO)
SFO #4	0.06	102	0.06	YES

2 EROSION CONTROL - STAGE 2 SCALE: 1" = 20'

1 LEGEND/NOTES SCALE: NTS

UNCW
UNIVERSITY of NORTH CAROLINA WILMINGTON
601 S COLLEGE ROAD
WILMINGTON, NORTH CAROLINA 28403

PARKING DECK II AND SURFACE PARKING (DESIGN-BUILD)
SOUTH CAMPUS - 4965 RIEGEL ROAD

SCO ID NUMBER: 18-19226-01A
CODE: 441828
ITEM: 301

CONTRACTOR
Balfour Beatty Construction

DESIGNER
CLARKNEXSEN
1523 ELIZABETH AVENUE, SUITE 300
CHARLOTTE, NORTH CAROLINA 28204
704·377·8800
CLARK NEXSEN LICENSE NUMBER: C-1028

CONSULTANTS
WALKER CONSULTANTS
13860 Ballantyne Corporate Place
Suite 140
Charlotte, NC 28277
T: 704.247.6230
www.walkerconsultants.com
NC License No. F-0518

McKIM&CREED
CIVIL ENGINEER
243 NORTH FRONT STREET
WILMINGTON, NORTH CAROLINA
28401
910.343.1048

CORPORATE SEAL

PROFESSIONAL SEAL
NORTH CAROLINA PROFESSIONAL ENGINEER SEAL 22913 RICHARD M. COLLINS
NOT FOR CONSTRUCTION

SUBMITTAL
04/15/2019
CONSTRUCTION DOCUMENT SUBMITTAL 01

REVISIONS

KEY PLAN

SHEET
EROSION CONTROL - STAGE 2

CE102

DESIGN: TRC
DRAWN: TRC
REVIEW: RMC

8/9/2018 4:16:18 PM
S:\49990016\90-Drawings\CE102_49990016.dwg

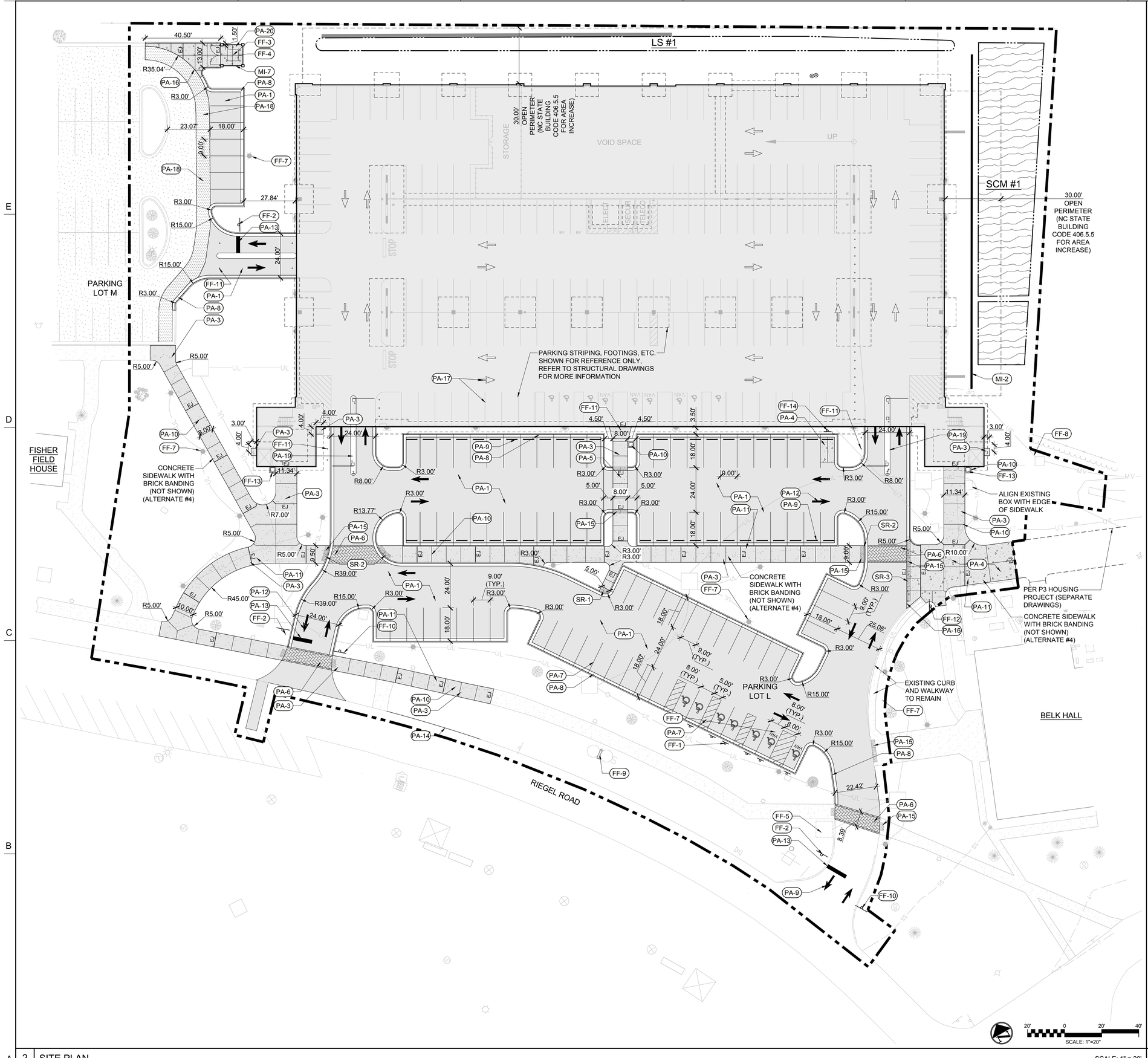

KEY NOTES LEGEND

PAVEMENTS AND CURBING		
KEY CODE	DESCRIPTION	DETAIL REFERENCE
PA-1	ASPHALT PAVEMENT	1/CS502
PA-2	NOTE NOTE USED	-
PA-3	CONCRETE PAVEMENT - TYPE 1	3/CS502
PA-4	CONCRETE PAVEMENT - TYPE 2	3/CS502
PA-5	RAISED CONCRETE CROSSWALK	1/CS503
PA-6	IMPRINTED ASPHALT CROSSWALK	8/CS502
PA-7	STANDARD & ACCESSIBLE PARKING SPACE LAYOUT (TYP.)	6/CS502
PA-8	CURB AND GUTTER (TYP.)	3/CS501
PA-9	WHEEL STOP (TYP.)	4/CS502
PA-10	CONTROL JOINT (TYP.)	1/CS501
PA-11	EXPANSION JOINT (TYP.)	1/CS501
PA-12	DIRECTIONAL ARROW PAVEMENT MARKING (TYP.)	7/CS502
PA-13	STOP BAR PAVEMENT MARKING (TYP.)	7/CS502
PA-14	NEW SAW-CUT PAVEMENT EDGE	
PA-15	TRUNCATED DOME WARNING MATS (TYP.)	2/4/5/CS501
PA-16	CONCRETE TO ASPHALT TRANSITION	2/CS502
PA-17	STRIPING/PAVEMENT MARKINGS WITHIN DECK	SEE STRUCT.
PA-18	MILL AND OVERLAY EXISTING ASPHALT PAVING	
PA-19	ISLAND CURB	5/CS503
PA-20	DUMPSTER PAD	2/S-401

STAIRS AND RAMPS		
KEY CODE	DESCRIPTION	DETAIL REFERENCE
SR-1	DEPRESSED CURB - TYPE 1	5/CS501
SR-2	DEPRESSED CURB - TYPE 2	4/CS501
SR-3	DEPRESSED CURB - TYPE 3	2/CS501

FURNITURE, FIXTURES AND EQUIPMENT		
KEY CODE	DESCRIPTION	DETAIL REFERENCE
FF-1	HANDICAP SIGNAGE (TYP.)	5/CS502
FF-2	STOP SIGN (TYP.)	9/CS502
FF-3	DUMPSTER (TYP.)	BY UNCW
FF-4	BOLLARD (TYP.)	8/S-550
FF-5	RELOCATED CALL BOX	PER ELECT.
FF-6	NOTE NOT USED	
FF-7	REFURBISHED LIGHT FIXTURE (TYP.)	PER ELECT.
FF-8	TRANSFORMER	PER ELECT.
FF-9	PER LEVEL SPACE AVAILABILITY SIGNAGE	AG401
FF-10	PERMIT ONLY SIGN	BY UNCW
FF-11	BOLLARD (TYP.)	AG401
FF-12	EMERGENCY AND AUTHORIZED VEHICLES ONLY SIGN	9/CS502
FF-13	TRASH RECEPTACLE	6/CS501
FF-14	MOTORCYCLE PARKING SIGN	9/CS502

MISCELLANEOUS		
MI-1	DUMPSTER ENCLOSURE SCREEN FENCE	2/3/5/6/CS503 & 2/S-401
MI-2	CIP RETAINING WALL	4/6/CS503

ALTERNATE NO. 1A: PAINT / STAIN DECK UNDERSIDE WITH A WHITE FINISH WITH 1-YEAR WARRANTY. PAINT ALL SPRINKLER AND STORM PIPING (INCLUDES VERTICAL, HORIZONTAL AND DIAGONAL PIPES).

ALTERNATE NO. 1B: PAINT / STAIN VERTICAL SURFACES WITH A WHITE FINISH WITH 1-YEAR WARRANTY.

ALTERNATE NO. 2: PROVIDE ALUMINUM NON-GLAZED FRAMES AT OPENINGS INDICATED IN THE ARCHITECTURAL DRAWINGS. ALL STAIR WINDOWS AND FRAMES TO REMAIN IN BASE BID.

ALTERNATE NO. 3A: ADD DOMESTIC WATER SOURCE FROM THE SOUTHWEST SITE NEW FIRE HYDRANT TO THE WEST SIDE OF THE DECK WITH A 2" REDUCED PRESSURE BACKFLOW PREVENTER, HOTBOX, DOMESTIC WATER BOOSTER PUMP AND 2" DOMESTIC WATER MAIN STUBBED INTO THE DECK.

ALTERNATE NO. 3B: PROVIDE 2" PIPING AND TWO (2) HOSE CONNECTIONS ON LEVELS 1 THROUGH 5 AT EACH END OF RAMP.

ALTERNATE NO. 4: PROVIDE BRICK EDGE BANDING AT NEW SIDEWALKS AS INDICATED ON THE CIVIL PLANS.

ALTERNATE NO. 5: PROVIDE 304 STAINLESS STEEL STAIR RAILINGS IN LIEU OF HOT DIPPED GALVANIZED.

UNCW
UNIVERSITY of NORTH CAROLINA WILMINGTON
601 S COLLEGE ROAD
WILMINGTON, NORTH CAROLINA 28403

PARKING DECK II AND SURFACE PARKING (DESIGN-BUILD)
SOUTH CAMPUS - 4965 RIEGEL ROAD

SCO ID NUMBER: 18-19226-01A
CODE: 441828
ITEM: 301

CONTRACTOR
Balfour Beatty Construction

DESIGNER

CLARKNEXSEN
1523 ELIZABETH AVENUE, SUITE 300
CHARLOTTE, NORTH CAROLINA 28204
704·377·8800
CLARK NEXSEN LICENSE NUMBER: C-1028

CONSULTANTS

WALKER CONSULTANTS
13860 Ballantyne Corporate Place
Suite 140
Charlotte, NC 28277
T: 704.247.6230
www.walkerconsultants.com
NC License No. F-0518

McKIM&CREED
CIVIL ENGINEER
243 NORTH FRONT STREET
WILMINGTON, NORTH CAROLINA
28401
910.343.1048

CORPORATE SEAL

PROFESSIONAL SEAL

SUBMITTAL
04/15/2019
CONSTRUCTION DOCUMENT SUBMITTAL 01

REVISIONS

KEY PLAN

SHEET
SITE PLAN

CS100

DESIGN: TRC
DRAWN: TRC
REVIEW: RMC

2 SITE PLAN — SCALE: 1" = 20'

1 LEGEND/NOTES — SCALE: NTS

8/9/2018 4:16:18 PM
S:\49990016\BIC\Drawings\CS100_49990016.dwg

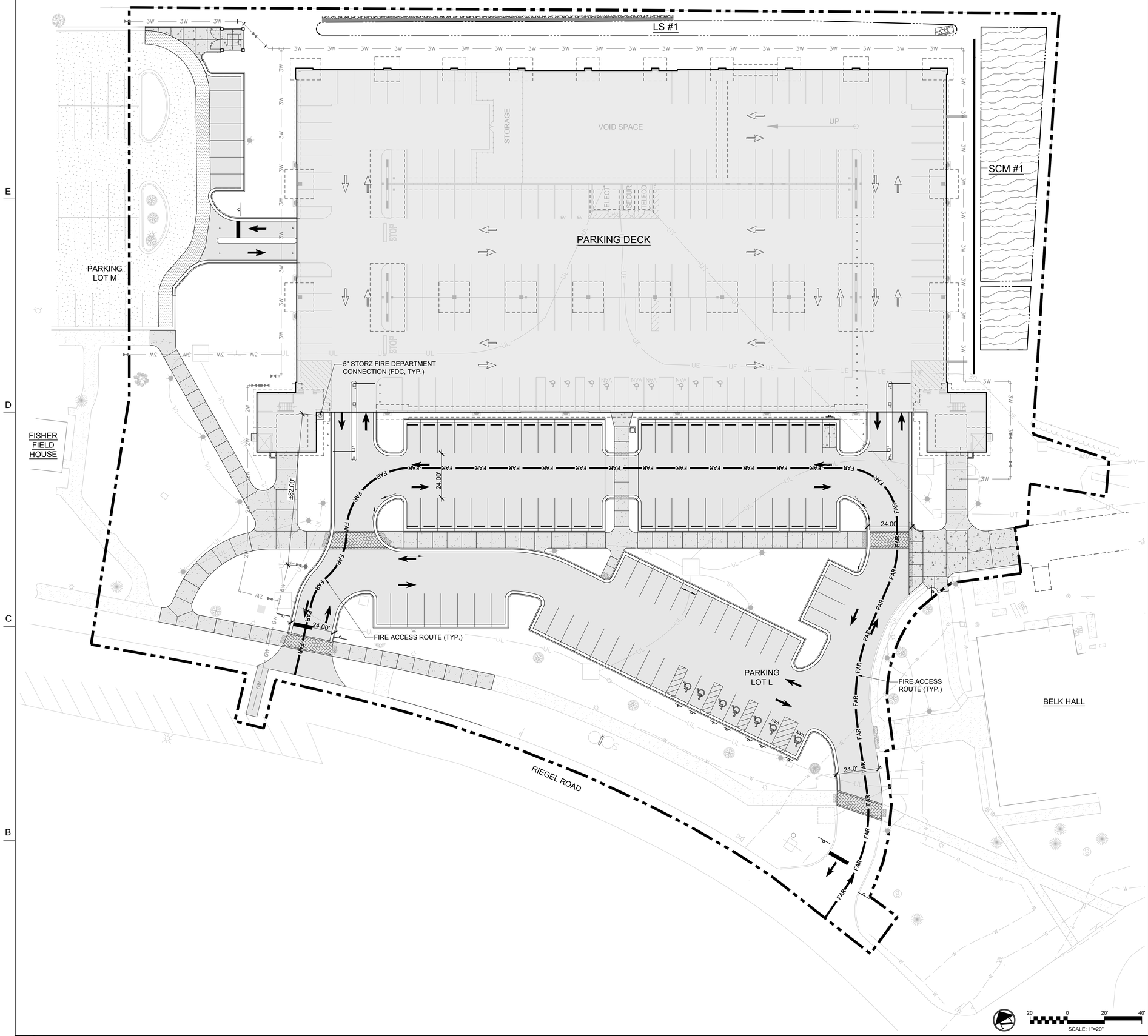

LEGEND

FAR FAR FIRE ACCESS ROUTE

FIRE FLOW TEST

FIRE HYDRANT FLOW TESTS WERE CONDUCTED ON JANUARY 1, 2019.

- THE FLOW HYDRANT (WH 0037) IS LOCATED ALONG RIEGEL ROAD IN FRONT OF HERBERT FISHER FIELD HOUSE
- THE RESIDUAL HYDRANT (WH 0074) IS LOCATED SOUTH OF BELK ALONG RIEGEL ROAD
- FLOW = 1110GPM @ 44 PSI
- STATIC PRESSURE = 58 PSI
- RESIDUAL PRESSURE = 49 PSI

UNCW
UNIVERSITY of NORTH CAROLINA WILMINGTON
601 S COLLEGE ROAD
WILMINGTON, NORTH CAROLINA 28403

PARKING DECK II AND SURFACE PARKING (DESIGN-BUILD)
SOUTH CAMPUS - 4965 RIEGEL ROAD

SCO ID NUMBER: 18-19226-01A
CODE: 441828
ITEM: 301

CONTRACTOR
Balfour Beatty Construction

DESIGNER
CLARKNEXSEN
1523 ELIZABETH AVENUE, SUITE 300
CHARLOTTE, NORTH CAROLINA 28204
704·377·8800

CLARK NEXSEN LICENSE NUMBER: C-1028

CONSULTANTS
WALKER CONSULTANTS
13860 Ballantyne Corporate Place
Suite 140
Charlotte, NC 28277
T: 704.247.6230
www.walkerconsultants.com
NC License No. F-0518

McKIM&CREED
CIVIL ENGINEER
243 NORTH FRONT STREET
WILMINGTON, NORTH CAROLINA
28401
910.343.1048

CORPORATE SEAL

PROFESSIONAL SEAL
NOT FOR CONSTRUCTION

SUBMITTAL
04/15/2019
CONSTRUCTION DOCUMENT SUBMITTAL 01

REVISIONS

KEY PLAN

SHEET
FIRE PROTECTION SITE PLAN

CF100

DESIGN: TRC
DRAWN: TRC
REVIEW: RMC

8/8/2018 4:16:18 PM
S:\499900\018\0-Drawings\CF100_499900016.dwg

A 2 FIRE PROTECTION SITE PLAN SCALE: 1" = 20'

1 LEGEND/NOTES SCALE: NTS

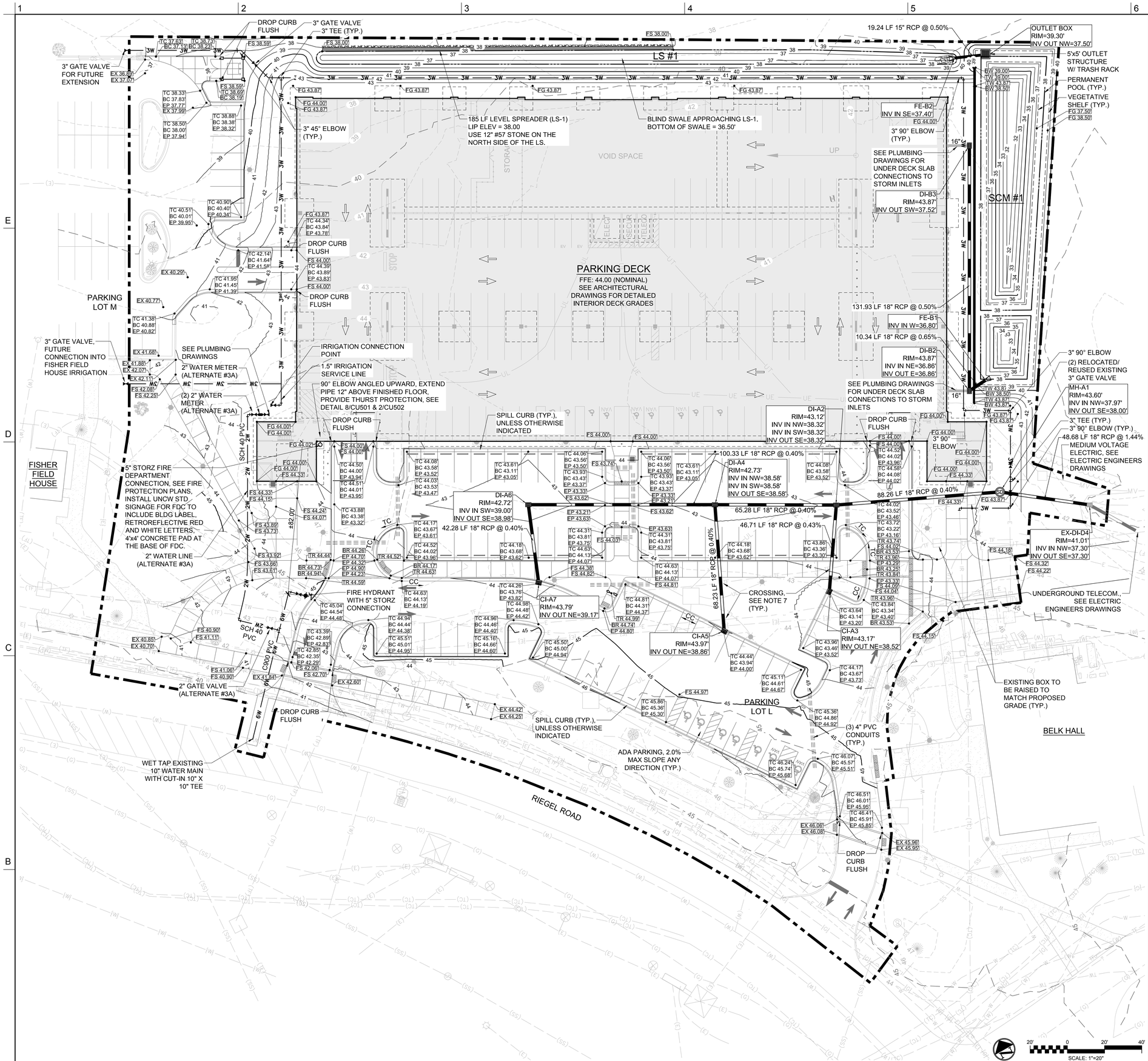

STORM DRAINAGE LEGEND

- STORM DRAIN LINE
- STORM DRAIN CURB INLET
- STORM DRAIN DROP INLET
- STORM DRAIN MANHOLE/ JUNCTION BOX
- FLARED END SECTION

GRADING LEGEND

- 39 — MINOR CONTOURS
- 40 — MAJOR CONTOURS
- EP 37.34' — SPOT GRADE
- BW — BOTTOM OF WALL
- TW — TOP OF WALL
- BS — BOTTOM OF STEP
- TS — TOP OF STEP
- BC — BOTTOM OF CURB
- TC — TOP OF CURB
- BR — BOTTOM OF RAMP
- TR — TOP OF RAMP
- FG — FINISHED GRADE
- FS — FINISHED SURFACE
- EP — EDGE OF PAVEMENT
- EX — EXISTING GRADE
- CC — CATCH CURB
- SC — SPILL CURB
- TC — TRANSITION CURB

WATER LEGEND

- 6W — WATER LINE
- FIRE HYDRANT
- FIRE DEPARTMENT CONNECTION
- WATER VALVE
- WATER METER
- WATER CROSSING
- WATER ELBOW
- WATER PLUG
- WATER TEE
- IRRIGATION BACKFLOW PREVENTER

UTILITY NOTES:

1. SITE UTILITY CONTRACTOR TO PROVIDE WATER SERVICE TO WITHIN 5 FEET OF THE BUILDING. CONTRACTOR SHALL COORDINATE SITE PLAN CONNECTIONS WITH THE ARCHITECTURAL BUILDING AND PLUMBING PLANS.
2. ALL UNDERGROUND PIPING AND UTILITIES (BOTH METALLIC AND NON-METALLIC), EXCEPT LAWN IRRIGATION LINES, SHALL HAVE PRINTED DURABLE PLASTIC WARNING TAPES IDENTIFYING BURIED PIPE BELOW. IN ADDITION, THE NON-METALLIC PIPES (PE, PVC, CP) SHALL BE IDENTIFIED BY MAGNETIC TYPE METHODS SUCH AS DETECTABLE TAPE OR TRACER WIRE.

STORM DRAINAGE AND GRADING NOTES:

1. IN ACCORDANCE WITH NC GENERAL STATUTES, NPDES REGULATIONS, AND NCDEQ REQUIREMENTS, STORMWATER DISCHARGE OUTFALLS SHALL BE INSPECTED BY THE CONTRACTOR. INSPECTIONS SHALL BE PERFORMED BY THE CONTRACTOR AFTER EACH STORM EVENT OF 1/2 INCH OR GREATER, WITH ONE WEEKLY INSPECTION MINIMUM. NCDENQ STANDARD INSPECTION REPORTS SHALL BE PREPARED AND SIGNED WITH COPIES PROVIDED TO THE OWNER, ARCHITECT, AND ENGINEER, BY THE CONTRACTOR.
2. INLET PROTECTION SHALL BE INSTALLED AROUND OUTFALL. DEVICES SHALL BE CONSTRUCTED TO FINAL PROPOSED CONDITION UPON STABILIZATION OF CONTRIBUTING GROUND SURFACES AND REMOVAL OF SEDIMENT FROM STORM PIPES.
3. SEDIMENT/EROSION DEVICES SHALL BE CHECKED BY THE CONTRACTOR DAILY. EACH DEVICE IS TO BE MAINTAINED OR REPLACED IF SEDIMENT ACCUMULATION HAS REACHED ONE HALF THE CAPACITY OF THE DEVICE.
4. ALL DIMENSIONS AND GRADES SHOWN ON THE PLANS SHALL BE FIELD VERIFIED BY THE CONTRACTOR PRIOR TO CONSTRUCTION. CONTRACTOR SHALL NOTIFY CONSTRUCTION MANAGER IF ANY DISCREPANCIES EXIST PRIOR TO PROCEEDING WITH CONSTRUCTION FOR NECESSARY PLAN OR GRADE CHANGES. NO EXTRA COMPENSATION SHALL BE PAID TO CONTRACTOR FOR ANY WORK DONE DUE TO DIMENSIONS OR GRADES SHOWN INCORRECTLY ON THESE PLANS IF SUCH NOTIFICATION HAS NOT BEEN GIVEN.
5. UNLESS OTHERWISE NOTED, GRADES AND SPOT ELEVATIONS NOTED ON PLANS INDICATE FINISHED GRADE OR PAVEMENT SURFACE. ALL DIMENSIONS ARE MEASURED TO THE BACK OF CURB UNLESS OTHERWISE INDICATED.
6. ALL AREAS TO BE GRADED SO THAT NO AREAS OF STANDING WATER OCCUR.
7. PROPOSED STORM WATER CROSSINGS WITH EXISTING TELECOMMUNICATIONS DUCT BANK AND ELECTRIC LINES WITH LESS THAN 12" SEPARATION SHALL BE ENCASED WITH FLOWABLE FILL CONCRETE WITH 6" THICK MINIMUM WALL THICKNESS.

2 GRADING, DRAINAGE AND UTILITY PLAN — SCALE: 1" = 20'

1 LEGEND/NOTES — SCALE: NTS

UNCW
UNIVERSITY of NORTH CAROLINA WILMINGTON
601 S COLLEGE ROAD
WILMINGTON, NORTH CAROLINA 28403

PARKING DECK II AND SURFACE PARKING (DESIGN-BUILD)
SOUTH CAMPUS - 4965 RIEGEL ROAD

SCO ID NUMBER: 18-19226-01A
CODE: 441828
ITEM: 301

CONTRACTOR
Balfour Beatty Construction

DESIGNER

CLARKNEXSEN
1523 ELIZABETH AVENUE, SUITE 300
CHARLOTTE, NORTH CAROLINA 28204
704·377·8800
CLARK NEXSEN LICENSE NUMBER: C-1028

CONSULTANTS

WALKER CONSULTANTS
13860 Ballantyne Corporate Place
Suite 140
Charlotte, NC 28277
T: 704.247.6230
www.walkerconsultants.com
NC License No. F-0518

McKIM&CREED
CIVIL ENGINEER
243 NORTH FRONT STREET
WILMINGTON, NORTH CAROLINA
28401
910.343.1048

CORPORATE SEAL

PROFESSIONAL SEAL
NOT FOR CONSTRUCTION

SUBMITTAL
04/15/2019
CONSTRUCTION DOCUMENT SUBMITTAL 01

REVISIONS

KEY PLAN

SHEET
GRADING, DRAINAGE AND UTILITY PLAN

CG100

DESIGN: TRC
DRAWN: TRC
REVIEW: RMC

8/9/2018 4:16:18 PM
S:\49990016\80\Drawings\CG100_49990016.dwg

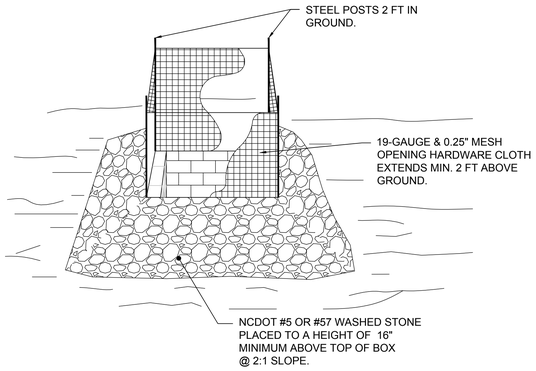

NOTES:

1. DRIVE 5-FOOT STEEL POSTS (1.25 lb/lf steel) 2 FEET INTO THE GROUND SURROUNDING THE INLET. SPACE POSTS EVENLY AROUND THE PERIMETER OF THE INLET, A MAXIMUM OF 4 FEET APART.
2. SURROUND THE POSTS WITH AT LEAST 19-GAUGE HARDWARE CLOTH WITH A 1/4-INCH MESH OPENING. SECURE THE WIRE MESH TO THE STEEL POSTS AT THE TOP, MIDDLE, AND BOTTOM FOR A MIN. 2 FEET ABOVE THE GROUND. PLACING A 2-FOOT FLAP OF THE WIRE MESH UNDER THE GRAVEL FOR ANCHORING AND REMOVAL IS RECOMMENDED.
3. UNIFORMLY GRADE A SHALLOW DEPRESSION APPROACHING THE INLET. THE TOP ELEVATION OF THE STRUCTURE MUST BE AT LEAST 12-INCHES LOWER THAN THE SURROUNDING GROUND ELEVATION DOWNSLOPE FROM THE INLET TO ENSURE THAT STORM FLOWS GET INTO THE INTENDED INLET; UNLESS OTHER SEDIMENT-CONTROL DEVICES ARE INSTALLED TO PREVENT OFF-SITE SEDIMENT-RUNOFF.

7 INLET PROTECTION

NTS

NOTE
STRUCTURAL STONE SHALL BE (CLASS "B") STONE FOR EROSION CONTROL PURPOSES. SEDIMENT CONTROL STONE SHALL BE NO. 5 OR NO. 57 STONE.

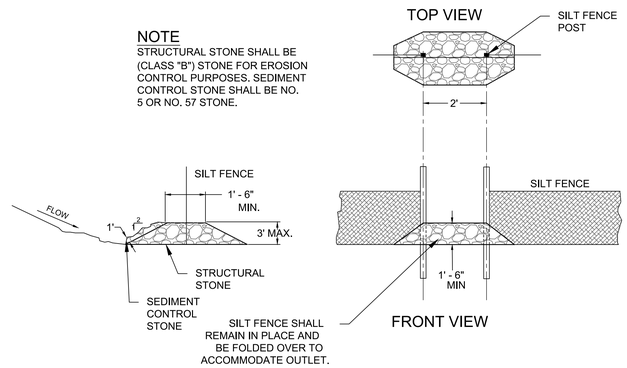

5 SILT FENCE STONE OUTLET

NTS

NOTE:
THE CRITICAL ROOT ZONE (CRZ) OF A TREE IS WHERE THE MAJORITY OF A TREE'S ROOTS LAY. 85% OF MOST TREE ROOTS ARE FOUND IN THE TOP 24" OF THE SOIL AND SUPPLY THE MAJORITY OF NUTRIENTS AND WATER. GENERALLY, ROOTS SPREAD OUT 2-3X THE HEIGHT OF THE TREE.

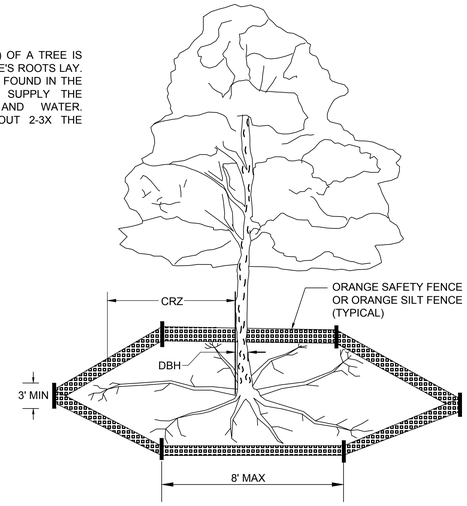

NOTES:

1. PROTECT CRITICAL ROOT ZONE (CRZ) OF TREES PRIOR TO CONSTRUCTION. CLEARLY MARK THE TREES AND ERECT A PROTECTIVE BARRIER AT THE CRZ. BARRIER SHALL BE MAINTAINED UNTIL CONSTRUCTION IS COMPLETE.
2. CRZ RADIUS IS 1 FT PER INCH OF TREE DIAMETER AT BREAST HEIGHT (DBH).
3. IF CONSTRUCTION OCCURS WITHIN THE CRZ, AT LEAST 12" OF MULCH AND/OR LOGGING MATTS SHALL BE PLACED WHERE MACHINERY MANEUVERS TO REDUCE SOIL COMPACTION IN THIS ZONE.
4. WHERE SIDEWALKS AND PATHWAYS PASS WITHIN CRZ, EXTRA CARE SHALL BE TAKEN TO AVOID DAMAGE TO THE ROOTS. ALTERNATE CONSTRUCTION METHODS, SUCH AS A REINFORCED SIDEWALK, SHALL BE IMPLEMENTED AS NECESSARY.
5. FOR ALL TREES, CUTTING OF LARGE STRUCTURAL ROOTS LOCATED NEAR THE BASE OF THE TRUNK IS PROHIBITED. DO NOT COMPACT SOIL BENEATH TREES. NO VEHICLE SHALL BE ALLOWED TO PARK UNDER TREES. NO MATERIALS OR EQUIPMENT SHALL BE STORED BENEATH TREES. DAMAGING THE BARK WITH LAWNMOWERS, CONSTRUCTION EQUIPMENT, OR ANYTHING ELSE IS PROHIBITED. CONTRACTOR SHALL REPAIR DAMAGE TO TREES.
6. FAILING TO INSTALL OR MAINTAIN PROTECTION MEASURES SHALL RESULT IN A STOP WORK ORDER AND FINE OF $500/DAY. DISTURBANCE OTHER THAN THAT ALLOWED ON THE APPROVED PLAN WILL REQUIRE OWNER TO POST A LETTER OF CREDIT FOR 3 YRS FOR TREE MITIGATION.

2 TREE PROTECTION FENCING

NTS

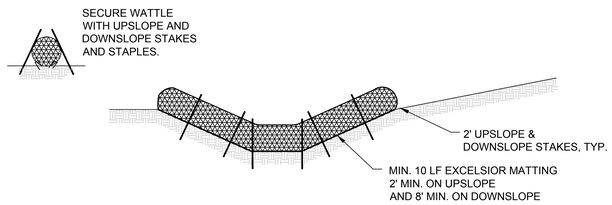

NOTES:

1. USE MINIMUM 12" DIA. EXCELSIOR WATTLE.
2. USE 2"x2" WOODEN STAKES 2-FT IN LENGTH ON THE UPSLOPE AND DOWNSLOPE AT AN ANGLE TO WEDGE THE WATTLE TO THE BOTTOM OF THE SWALE.
3. STAPLE EVERY 1 LF ON BOTH SIDES OF THE WATTLE TO SECURE IT TO THE BOTTOM OF THE SWALE.

4 TEMPORARY WATTLE (CHECK DAM)

NTS

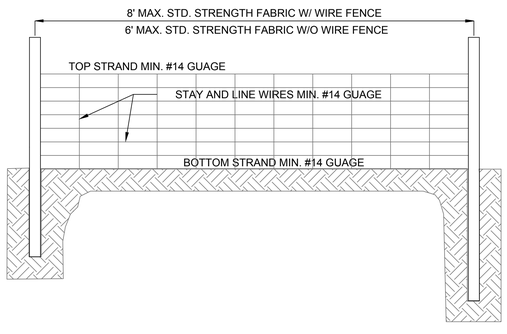

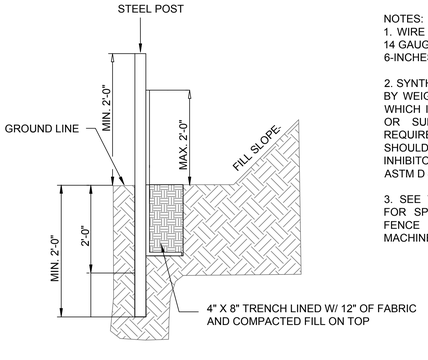

NOTES:

1. WIRE FENCE (IF USED) SHALL BE MINUMUM 14 GAUGE WITH A MAXIMUM MESH OPENING OF 6-INCHES.
2. SYNTHETIC FILTER FABRIC OF AT LEAST 95% BY WEIGHT OF POLYOLEFINS OR POLYESTER, WHICH IS CERTIFIED BY THE MANUFACTURER OR SUPPLIER AS CONFORMING TO THE REQUIREMENTS IN ASTM D 6461 AND ALSO SHOULD CONTAIN ULTRAVIOLET RAY INHIBITORS AND STABILIZERS ACCORDING TO ASTM D 4355.
3. SEE THE NC EROSION CONTROL MANUAL FOR SPECIFICATIONS INSTALLING SEDIMENT FENCE USING THE SLICING METHOD MACHINERY.

6 TEMPORARY SILT FENCE

NTS

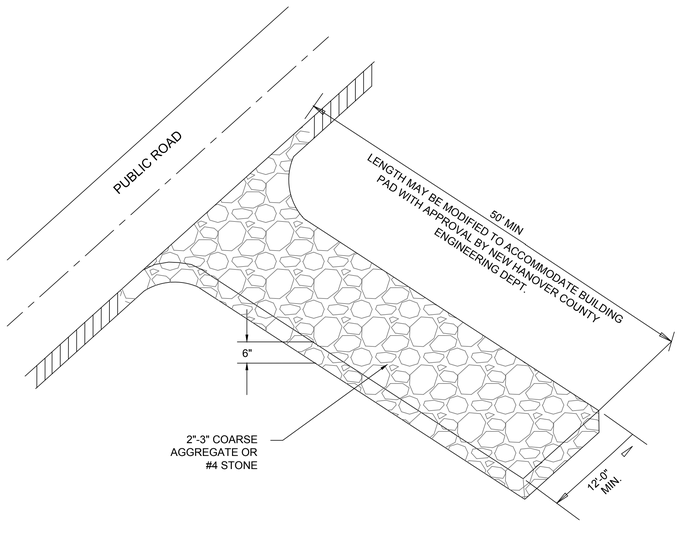

3 CONSTRUCTION ENTRANCE

NTS

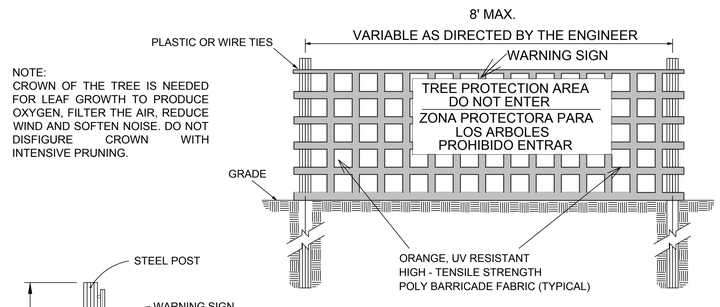

NOTE:
CROWN OF THE TREE IS NEEDED FOR LEAF GROWTH TO PRODUCE OXYGEN, FILTER THE AIR, REDUCE WIND AND SOFTEN NOISE. DO NOT DISFIGURE CROWN WITH INTENSIVE PRUNING.

FRONT VIEW

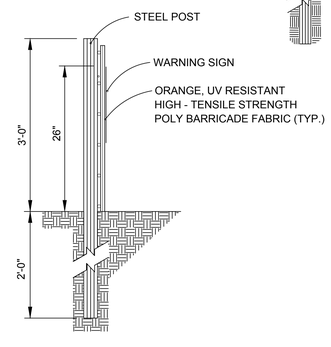

SIDE VIEW

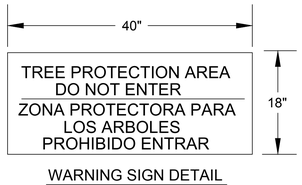

WARNING SIGN DETAIL

NOTES:

1. THE TREE PROTECTION FENCING SHALL NOT BE VIOLATED FOR THE ENTIRE DURATION OF THE PROJECT WITHOUT APPROVAL FROM URBAN FORESTRY STAFF.
2. WARNING SIGNS TO BE MADE OF DURABLE, WEATHERPROOF MATERIAL. LETTERS TO BE 3" HIGH, MINIMUM, CLEARLY LEGIBLE AND SPACED AS DETAILED.
3. SIGNS SHALL BE PLACED AT 50' MAXIMUM INTERVALS. PLACE A SIGN AT EACH END OF LINEAR TREE PROTECTION AND 50' ON CENTER THEREAFTER. FOR TREE PROTECTION AREAS LESS THAN 100' IN PERIMETER, PROVIDE NO LESS THAN TWO SIGNS PER PROTECTION AREA.
4. ATTACH SIGNS SECURELY TO FENCE POSTS AND FABRIC. MAINTAIN TREE PROTECTION FENCE AND SIGNS THROUGHOUT DURATION OF PROJECT.
5. TREE PROTECTION FENCING AND SIGNAGE SHALL BE REMOVED AFTER CONSTRUCTION.
6. ADDITIONAL SIGNS MAY BE REQUIRED BY CITY OF WILMINGTON, BASED ON ACTUAL FIELD CONDITIONS.

1 TREE PROCTECTION SIGNAGE

NTS

UNCW
UNIVERSITY of NORTH CAROLINA WILMINGTON
601 S COLLEGE ROAD
WILMINGTON, NORTH CAROLINA 28403

PARKING DECK II AND SURFACE PARKING (DESIGN-BUILD)
SOUTH CAMPUS - 4965 RIEGEL ROAD

SCO ID NUMBER: 18-19226-01A
CODE: 441828
ITEM: 301

CONTRACTOR
Balfour Beatty Construction

DESIGNER
CLARKNEXSEN
1523 ELIZABETH AVENUE, SUITE 300
CHARLOTTE, NORTH CAROLINA 28204
704·377·8800
CLARK NEXSEN LICENSE NUMBER: C-1028

CONSULTANTS
WALKER CONSULTANTS
13860 Ballantyne Corporate Place
Suite 140
Charlotte, NC 28277
T: 704.247.6230
www.walkerconsultants.com
NC License No. F-0518

McKIM&CREED
CIVIL ENGINEER
243 NORTH FRONT STREET
WILMINGTON, NORTH CAROLINA
28401
910.343.1048

CORPORATE SEAL

PROFESSIONAL SEAL
NOT FOR CONSTRUCTION
NORTH CAROLINA PROFESSIONAL SEAL 22915 ENGINEER
R. EDWARD M. COLLISON

SUBMITTAL
04/15/2019
CONSTRUCTION DOCUMENT SUBMITTAL 01

REVISIONS

KEY PLAN

SHEET
EROSION CONTROL DETAILS

CE501

DESIGN: TRC
DRAWN: TRC
REVIEW: RMC

8/9/2018 4:16:18 PM
S:\49990016\80-Drawings\CE501_49990016.dwg

SEEDBED PREPARATION:

1. CHISEL COMPACTED AREAS AND SPREAD TOPSOIL 3 INCHES DEEP OVER ADVERSE SOIL CONDITIONS, IF AVAILABLE.
2. RIP THE ENTRANCE AREA TO 6 INCHES DEPTH.
3. REMOVE ALL LOOSE ROCK, ROOTS, AND OTHER OBSTRUCTIONS LEAVING SURFACE REASONABLY SMOOTH AND UNIFORM.
4. APPLY AGRICULTURAL LIME, FERTILIZER, AND SUPERPHOSPHATE UNIFORMLY AND MIX WITH SOIL (SEE BELOW*).
5. CONTINUE TILLAGE UNTIL A WELL - PULVERIZED, FIRM, REASONABLY UNIFORM SEEDBED IS PREPARED 4 TO 6 INCHES DEEP.
6. SEED ON A FRESHLY PREPARED SEEDBED AND COVER SEED LIGHTLY WITH SEEDING EQUIPMENT OR CULTIPACK AFTER SEEDING.
7. MULCH IMMEDIATELY AFTER SEEDING AND ANCHOR MULCH.
8. INSPECT ALL SEEDED AREAS AND MAKE NECESSARY REPAIRS OR RESEEDINGS WITHIN THE PLANTING SEASON, IF POSSIBLE. IF STAND SHOULD BE OVER 60% DAMAGED, REESTABLISH FOLLOWING ORIGINAL LIME, FERTILIZER AND SEEDING RATES.
9. CONSULT CONSERVATION INSPECTOR ON MAINTENANCE TREATMENT AND FERTILIZATION AFTER PERMANENT COVER IS ESTABLISHED.
10. APPLY:
    AGRICULTURAL LIMESTONE - 2 TONS/ACRE
    FERTILIZER - 1000 LBS/ACRE (10-10-10)
    SUPERPHOSPHATE - 500 LBS/ACRE (20%)
    MULCH - 2 TONS/ACRE (SMALL GRAIN STRAW)
    ANCHOR - ASPHALT EMULSION AT 450 GAL/ACRE

EROSION CONTROL MAINTENANCE PLAN:

1. ALL SEDIMENT AND EROSION CONTROL DEVICES SHALL BE INSPECTED AND REPAIRED, AS NECESSARY, EVERY SEVEN (7) DAYS AND WITHIN 24 HOURS OF EVERY ONE-HALF (0.5) INCH OR GREATER RAINFALL OCCURRENCE.
2. ALL EROSION CONTROL DEVICES SHALL BE PROPERLY MAINTAINED DURING ALL PHASES OF CONSTRUCTION UNTIL THE COMPLETION OF ALL CONSTRUCTION ACTIVITIES AND ALL DISTURBED AREAS HAVE BEEN STABILIZED. ADDITIONAL CONTROL DEVICES MAY BE REQUIRED DURING CONSTRUCTION IN ORDER TO CONTROL EROSION AND/OR OFFSITE SEDIMENTATION. ALL TEMPORARY CONTROL DEVICES SHALL BE REMOVED ONCE CONSTRUCTION IS COMPLETE AND THE SITE IS STABILIZED.
3. SEDIMENT SHALL BE REMOVED FROM BEHIND THE SILT FENCE WHEN IT BECOMES ABOUT 0.5 FEET DEEP. THE SEDIMENT FENCE WILL BE REPAIRED OR REPLACED AS NECESSARY TO MAINTAIN A BARRIER.
4. ALL AREAS WILL BE FERTILIZED, RESEEDED AS NECESSARY, AND MULCHED ACCORDING TO SPECIFICATIONS IN THE VEGETATIVE PLAN TO MAINTAIN A VIGOROUS, DENSE VEGETATIVE COVER.
5. STONE CONSTRUCTION ENTRANCE TO BE CLEANED WHEN SEDIMENT ACCUMULATIONS ARE VISIBLE OR SEDIMENT IS TRACKED ON TO THE PAVEMENT. STONE WILL BE PERIODICALLY TOP DRESSED WITH 2 INCHES OF #4 STONE TO MAINTAIN 6 INCH DEPTH. THE CONTRACTOR SHALL DAILY REMOVE MUD/SOIL FROM PAVEMENT, AS REQUIRED.
6. INSPECT INLETS AT LEAST WEEKLY AND AFTER EACH SIGNIFICANT (0.5" OR GREATER) RAINFALL EVENT. CLEAR THE MESH WIRE OF ANY DEBRIS OR OTHER OBJECTS TO PROVIDE ADEQUATE FLOW FOR SUBSEQUENT RAINS. TAKE CARE NOT TO DAMAGE OR UNDERCUT THE WIRE MESH DURING SEDIMENT REMOVAL. REPLACE STONE AS NEEDED. INLET PROTECTION SHOULD BE CLEANED OUT WHEN IT IS HALF FULL.

EROSION CONTROL NOTES

1. ANY GRADING BEYOND THE DENUDED LIMITS SHOWN ON THE PLAN IS A VIOLATION OF THE COUNTY EROSION CONTROL ORDINANCE AND IS SUBJECT TO A FINE.
2. GRADING MORE THAN ONE ACRE WITHOUT AN APPROVED EROSION CONTROL PLAN IS A VIOLATION OF STATE LAW AND IS SUBJECT TO A FINE.
3. GROUND COVER MUST BE PROVIDED ON EXPOSED SLOPES WITHIN 21 CALENDAR DAYS FOLLOWING COMPLETION OF ANY PHASE OF GRADING; AND, A PERMANENT GROUND COVER FOR ALL DISTURBED AREAS WITHIN 15 WORKING DAYS OR 90 CALENDAR DAYS (WHICHEVER IS SHORTER) FOLLOWING COMPLETION OF CONSTRUCTION OR DEVELOPMENT.
4. ADDITIONAL MEASURES TO CONTROL EROSION AND SEDIMENT MAY BE REQUIRED BY A REPRESENTATIVE OF NEW HANOVER COUNTY.
5. SLOPES SHALL BE GRADED NO STEEPER THAN 3:1.
6. ADDITIONAL DEVICES MAY BE REQUIRED AS AGREED UPON BY THE FIELD INSPECTOR, ENGINEER, AND OWNER.
7. IF ACTIVE CONSTRUCTION CEASES IN ANY AREA FOR MORE THAN 15 WORKING DAYS OR 90 CALENDAR DAYS (WHICHEVER IS SHORTER), ALL DISTURBED AREAS MUST BE SEEDED, MULCHED, AND TACKED.
8. WITHIN 24 HOURS FOLLOWING ANY RAIN EVENT, THE CONTRACTOR SHALL INSPECT AND REPAIR, AS NECESSARY, ALL DAMAGED EROSION CONTROL MEASURES.
9. ALL ACTIVITY AND INSTALLATION OF EROSION CONTROL MATTING WILL BE COMPLETE PRIOR TO ANY RAIN EVENT.

5 NOTES — NTS

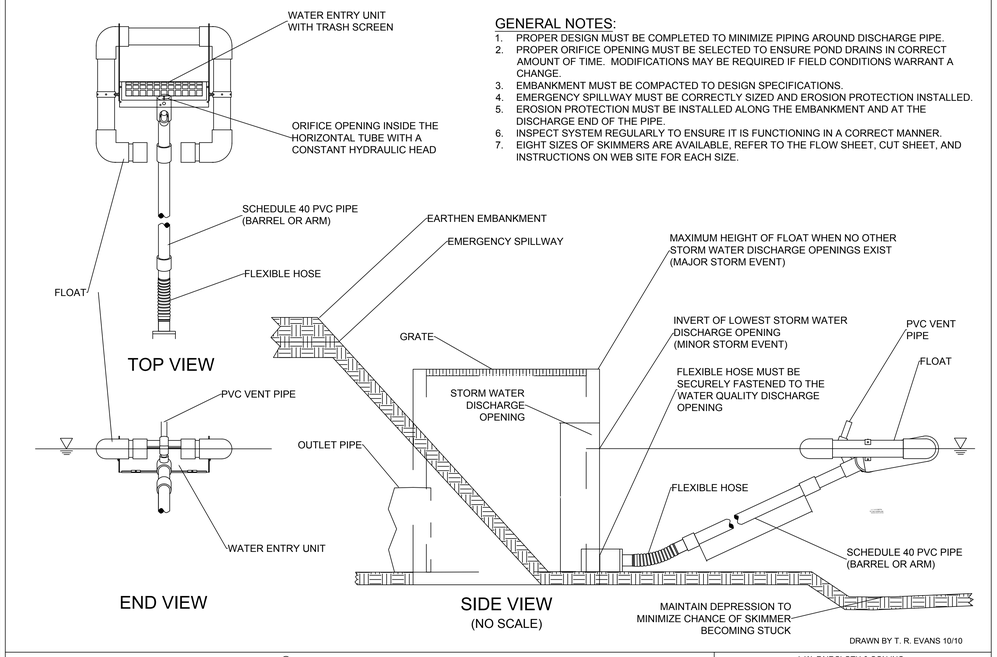

GENERAL NOTES:

1. PROPER DESIGN MUST BE COMPLETED TO MINIMIZE PIPING AROUND DISCHARGE PIPE.
2. PROPER ORIFICE OPENING MUST BE SELECTED TO ENSURE POND DRAINS IN CORRECT AMOUNT OF TIME. MODIFICATIONS MAY BE REQUIRED IF FIELD CONDITIONS WARRANT A CHANGE.
3. EMBANKMENT MUST BE COMPACTED TO DESIGN SPECIFICATIONS.
4. EMERGENCY SPILLWAY MUST BE CORRECTLY SIZED AND EROSION PROTECTION INSTALLED.
5. EROSION PROTECTION MUST BE INSTALLED ALONG THE EMBANKMENT AND AT THE DISCHARGE END OF THE PIPE.
6. INSPECT SYSTEM REGULARLY TO ENSURE IT IS FUNCTIONING IN A CORRECT MANNER.
7. EIGHT SIZES OF SKIMMERS ARE AVAILABLE, REFER TO THE FLOW SHEET, CUT SHEET, AND INSTRUCTIONS ON WEB SITE FOR EACH SIZE.

DRAWN BY T. R. EVANS 10/10

FAIRCLOTH® SKIMMER DISCHARGE SYSTEM WITH OUTLET STRUCTURE

J. W. FAIRCLOTH & SON INC.
WWW.FAIRCLOTHSKIMMER.COM
TELEPHONE: (919) 732-1244
FAX: (919) 732-1266
EMAIL: WARREN@FAIRCLOTHSKIMMER.COM

2 FAIRCLOTH SKIMMER — NTS

SKIMMER BASIN CALCULATION TABLE

Skimmer No.	Drainage Area ac	Rational C Runoff Coeff.	I10 Intensity in/hr	Q10 Peak Flow cfs		Required SA (350 x Q10) sf	Provided SA sf	Required Vol (1800cf/ac x DA) cf	Provided Vol cf	Storage Depth ft	Storage Vol Drained cf		Weir Width ft
TSB-1	1.52	0.95	7.23	10.44		3,654	7,086	2,736	24,769	7.59	24,769		50.0

FAIRCLOTH SKIMMER SIZE CALCULATION

Skimmer No.	Dewatering Time (days)	Skimmer Outflow cf/day	Skimmer Size in	Orifice Diameter in	Orifice Radius in	Barrel Outflow gpm	Barrel Pipe in	
TSB-1	3	8,256	8.0	2.5	1.2	42.9	12.0	Draw to 30
TSB-1	3	912	8.0	0.8	0.4	4.7	12.0	Req'd Draw

Faircloth Skimmer Selection Table

Skimmer Size in	Outflow Qmax cf/day	Head ft
1.5	1,728	0.125
2	3,283	0.167
2.5	6,234	0.208
3	9,774	0.250
4	20,109	0.333
5	32,832	0.333
6	51,840	0.417
8	97,978	0.500

NOTES:
1. Q10 Peak Flow were taken from Rational Method.
2. Required Surface Areas and Volumes were taken from NCDENR ESC Manual.
3. Faircloth Skimmer Selection Table taken from Table 4-2. NCDOT Level III-A Design of Sediment & Erosion Control Plans Manual
4. Emergency Weir Width taken from Skimmer Basin Criteria Section of NCDENR ESC Manual Table and/or Hydraulic Routing of the basin to ensure non-erosive velocity.
5. Minimum Barrel Pipe on the Skimmer is 4-inches. (On a 1% slope the capacity is 100 GPM)

4 SEDIMENT BASIN CALCULATIONS — NTS

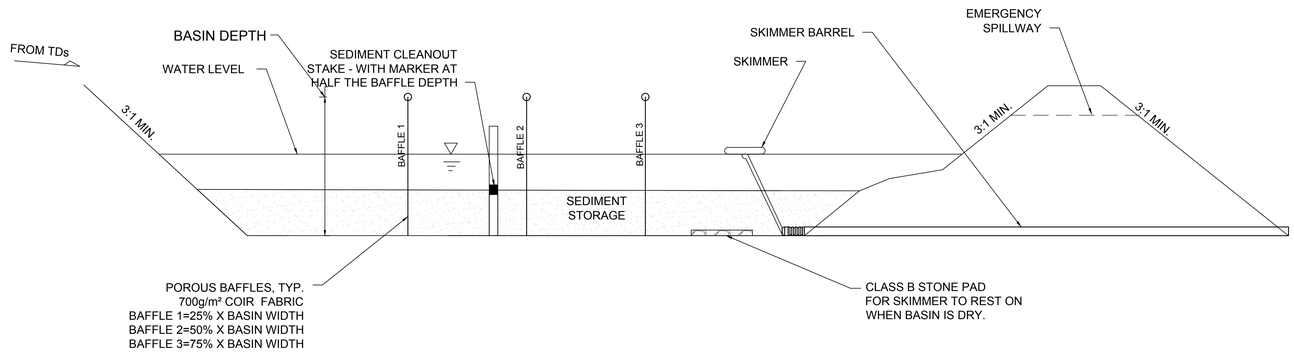

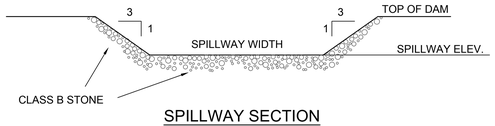

SPILLWAY SECTION

NOTES:

1. BAFFLE MATERIAL SHALL BE MATERIALS SUCH AS 700 GPM COIR EROSION BLANKET, COIR MESH, OR TREE PROTECTION FENCE FOLDED OVER TO REDUCE PORE SIZE.
2. THE BAFFLE MATERIAL NEEDS TO BE SECURED AT THE BOTTOM AND SIDES USING STAPLES OR BY TRENCHING AS FOR SILT FENCE.
3. LOCATE THE EMERGENCY SPILLWAY ON NATURAL SOILS. AVOID PLACING IT THROUGH FILL MATERIAL WHEREVER POSSIBLE.
4. ALL RUNOFF MUST DISCHARGE TO THE INLET SIDE OF THE BASIN. DISCHARGE RUNOFF INTO THE BASIN IN A MANNER THAT MINIMIZES EROSION.

NOTES:

ORIFICE SIZES ARE FOR THE FAIRCLOTH SKIMMER. IF ANOTHER TYPE OF SKIMMER IS USED THE DEVICE MUST BE ABLE TO DRAIN THE BASIN WITHIN 24 - 72 HOURS.

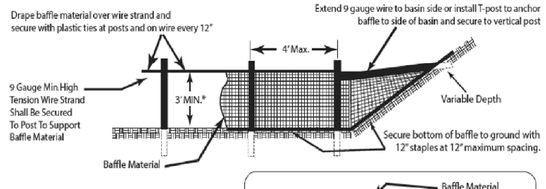

* If the temporary sediment basin will be converted to a permanent stormwater basin of greater depth, the baffle height should be based on the pool depth during use as a temporary sediment basin.

Note: Install three (3) coir fiber baffles in basins at drainage outlets with a spacing of 1/4 the basin length. Two (2) coir fiber baffles can be installed in the basins less than 20 ft. in length with a spacing of 1/3 the basin length.

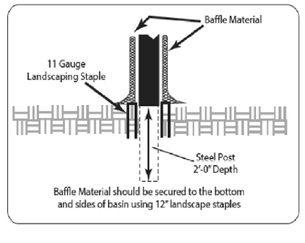

1 SKIMMER SEDIMENT BASIN — NTS

TEMPORARY SEEDING			
GRASS TYPE	AMOUNT/ 1000 S.F.	TIME OF SEEDING	INITIAL
RYE GRAIN	1-2 LBS.	APRIL - JUNE	25 LBS. 10-10-10
BROWNTOP MILLET	1-2 LBS	JUNE - AUGUST	25 LBS 10-10-10

PERMANENT SEEDING			
GRASS TYPE	AMOUNT/ 1000 S.F.	TIME OF SEEDING	INITIAL
BERMUDA, COMMON	1-2 LBS.	APRIL - JUNE	25 LBS. 10-10-10
FESCUE, TALL (KENTUCKY 31)	5-7 LBS	JUNE - AUGUST FEB. - OCT.	25 LBS 10-10-10
SERICEA LESPEDEZA (SLOPES	1-2 LBS	MARCH - APRIL	25 LBS 10-10-10

GROUND STABILIZATION CRITERIA		
SITE AREA DESCRIPTION	STABILIZATION TIMEFRAME	STABILIZATION TIMEFRAME EXCEPTIONS
PERIMETER DIKES, SWALES, DITCHES AND SLOPES	7 DAYS	NONE
HIGH QUALITY WATER ZONES	7 DAYS	NONE
SLOPES STEEPER THAN 3:1	7 DAYS	IF SLOPES ARE 10 FT OR LESS IN IN LENGTH AND ARE NOT STEEPER THAN 2:1, 14 DAYS ARE ALLOWED
SLOPES 3:1 OR FLATTER	14 DAYS	7 DAYS FOR SLOPES GREATER THAN 50 FT IN LENGTH
ALL OTHER AREAS WITH SLOPES FLATTER THAN 4:1	14 DAYS	NONE (EXCEPT FOR PERIMETERS AND HQW ZONES)

NOTE (G.S. 113A-57 (2))
THE ANGLE FOR GRADED SLOPES AND FILLS SHALL BE NO GREATER THAN THE ANGLE THAT CAN BE RETAINED BY VEGETATIVE COVER OR OTHER ADEQUATE EROSION CONTROL DEVICES OR STRUCTURES. IN ANY EVENT, SLOPES LEFT EXPOSED WILL, WITHIN 21 CALENDAR DAYS OF COMPLETION OF ANY GRADING, BE PLANTED OR OTHERWISE PROVIDED WITH TEMPORARY OR PERMANENT GROUND COVER, DEVICES, OR STRUCTURES SUFFICIENT TO RESTRAIN EROSION.

3 SEEDING & STABILIZATION — NTS

UNCW
UNIVERSITY of NORTH CAROLINA WILMINGTON
601 S COLLEGE ROAD
WILMINGTON, NORTH CAROLINA 28403

PARKING DECK II AND SURFACE PARKING (DESIGN-BUILD)
SOUTH CAMPUS - 4965 RIEGEL ROAD

SCO ID NUMBER: 18-19226-01A
CODE: 441828
ITEM: 301

CONTRACTOR
Balfour Beatty Construction

DESIGNER

CLARKNEXSEN
1523 ELIZABETH AVENUE, SUITE 300
CHARLOTTE, NORTH CAROLINA 28204
704·377·8800
CLARK NEXSEN LICENSE NUMBER: C-1028

CONSULTANTS

WALKER CONSULTANTS
13860 Ballantyne Corporate Place
Suite 140
Charlotte, NC 28277
T: 704.247.6230
www.walkerconsultants.com
NC License No. F-0518

McKIM&CREED
CIVIL ENGINEER
243 NORTH FRONT STREET
WILMINGTON, NORTH CAROLINA
28401
910.343.1048

CORPORATE SEAL

PROFESSIONAL SEAL

SUBMITTAL
04/15/2019
CONSTRUCTION DOCUMENT SUBMITTAL 01

REVISIONS

KEY PLAN

SHEET
EROSION CONTROL DETAILS

CE502

DESIGN: TRC
DRAWN: TRC
REVIEW: RMC

8/9/2018 4:16:18 PM
S:\49990016\80-Drawings\CE501_49990016.dwg

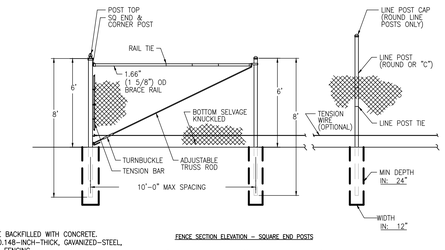

NOTES:
1. POST HOLES TO BE BACKFILLED WITH CONCRETE.
2. MINIMUM 2-INCH, 0.148-INCH-THICK, GAVANIZED-STEEL, CHAIN-LINK FABRIC FENCING
3. MINIMUM 6-FEET HIGHT WITH GALVANIZED-STEEL PIPE POSTS
4. MINIMUM 2-3/8-INCH-OD LINE POSTS
5. 2-7/8-INCH-OD CORNER AND PULL POSTS

FENCE SECTION ELEVATION – SQUARE END POSTS

	END & CORNER POST TOP OPTIONS		TOP & BOTTOM FABRIC OPTIONS	
	STANDARD	FLAT	TWIST	KNUCKLE
CHECK DESIRED OPTIONS ☑	☐	☑	☐	☑

6' HIGH CHAINLINK FENCE

NTS

2 TEMPORARY SECURITY FENCE NTS

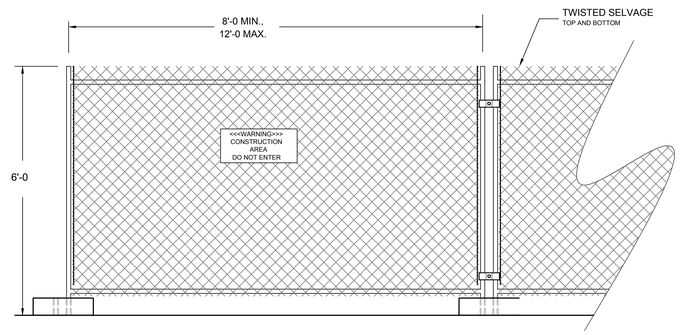

NOTES

1. CHAIN LINK FABRIC TO BE MIN. 11 GAUGE, GALVANIZED. NO RUSTED OR EXCESSIVELY MALFORMED FABRIC.
2. FENCE BASES SHALL BE OF SUFFICIENT WEIGHT and/or SPREAD TO ADEQUATELY SUPPORT EACH PANEL.
3. PANEL-TO-PANEL CONNECTIONS SHALL BE MADE AT A MIN. TWO LOCATIONS PER CONNECTION UNLESS OTHERWISE APPROVED.
4. PROVIDE CONSTRUCTION WARNING SIGNAGE 50'O.C. ALONG FENCING INSTALLATION.

1 TEMPORARY CONSTRUCTION FENCING NTS

UNCW
UNIVERSITY of NORTH CAROLINA WILMINGTON
601 S COLLEGE ROAD
WILMINGTON, NORTH CAROLINA 28403

PARKING DECK II AND SURFACE PARKING (DESIGN-BUILD)
SOUTH CAMPUS - 4965 RIEGEL ROAD

SCO ID NUMBER: 18-19226-01A
CODE: 441828
ITEM: 301

CONTRACTOR
Balfour Beatty Construction

DESIGNER
CLARKNEXSEN
1523 ELIZABETH AVENUE, SUITE 300
CHARLOTTE, NORTH CAROLINA 28204
704·377·8800

CLARK NEXSEN LICENSE NUMBER: C-1028

CONSULTANTS
WALKER CONSULTANTS
13860 Ballantyne Corporate Place
Suite 140
Charlotte, NC 28277
T: 704.247.6230
www.walkerconsultants.com
NC License No. F-0518

McKIM&CREED
CIVIL ENGINEER
243 NORTH FRONT STREET
WILMINGTON, NORTH CAROLINA
28401
910.343.1048

CORPORATE SEAL

PROFESSIONAL SEAL
NORTH CAROLINA PROFESSIONAL SEAL 22915 ENGINEER RICHARD M. COLLINS

SUBMITTAL
04/15/2019
CONSTRUCTION DOCUMENT SUBMITTAL 01

REVISIONS

KEY PLAN

SHEET
EROSION CONTROL DETAILS

CE503

DESIGN: TRC
DRAWN: TRC
REVIEW: RMC

8/9/2018 4:16:18 PM
S:\49990016\80-Drawings\CE501_49990016.dwg

NOTES:
1. MAXIMUM RAMP RISE NOT TO EXCEED 6".
2. SEE ALSO CONCRETE PAVEMENT NOTES 3/CS502
3. TRUNCATED DOME WARNING MAT - 2' X 4' TRUNCATED DOME PAD, WET SET AND FASTEN PER MANUFACTURE RECOMMENDATION, COLOR TO BE RED TO MATCH EXISTING CAMPUS APPLICATIONS

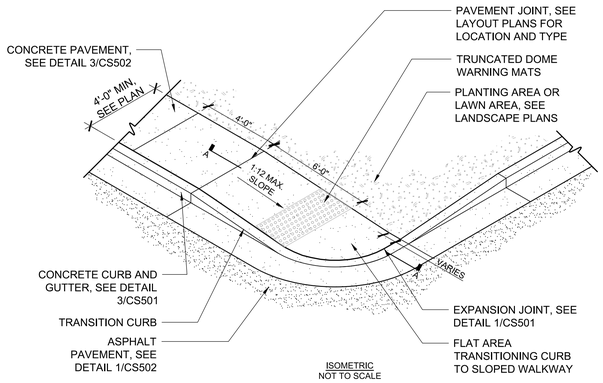

ISOMETRIC
NOT TO SCALE

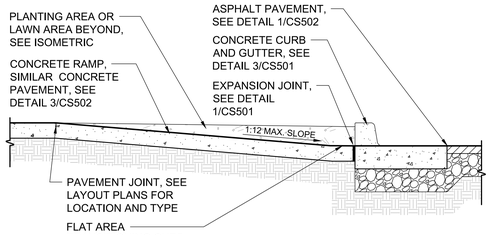

SECTION A
3/4" = 1'-0"

5 DEPRESSED CURB - TYPE 1 NTS

NOTE:
1. HOODED SENTRY (#HS-004-20) TRASH RECEPTACLE
2. SIZE: 20" x 20" x 40" (NO DOORS)

6 TRASH CAN NTS

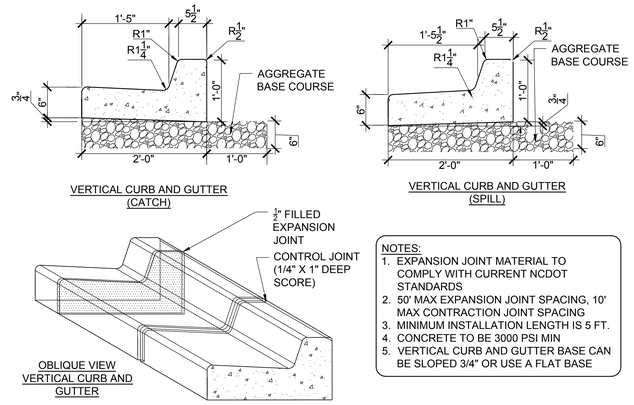

NOTES:
1. EXPANSION JOINT MATERIAL TO COMPLY WITH CURRENT NCDOT STANDARDS
2. 50' MAX EXPANSION JOINT SPACING, 10' MAX CONTRACTION JOINT SPACING
3. MINIMUM INSTALLATION LENGTH IS 5 FT.
4. CONCRETE TO BE 3000 PSI MIN
5. VERTICAL CURB AND GUTTER BASE CAN BE SLOPED 3/4" OR USE A FLAT BASE

3 CURB AND GUTTER NTS

NOTES:
1. MAXIMUM RAMP RISE NOT TO EXCEED 6".
2. SEE ALSO CONCRETE PAVEMENT NOTES 3/CS502
3. TRUNCATED DOME WARNING MAT - 2' X 4' TRUNCATED DOME PAD, WET SET AND FASTEN PER MANUFACTURE RECOMMENDATION, COLOR TO BE RED TO MATCH EXISTING CAMPUS APPLICATIONS

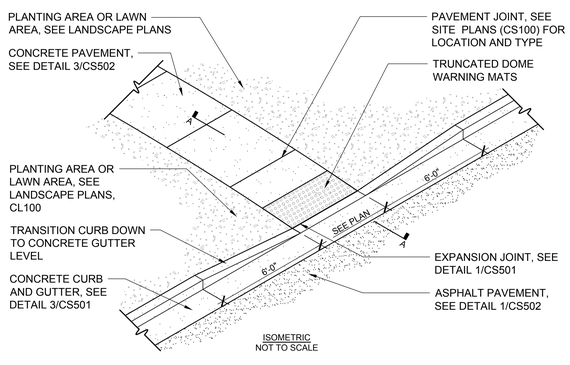

ISOMETRIC
NOT TO SCALE

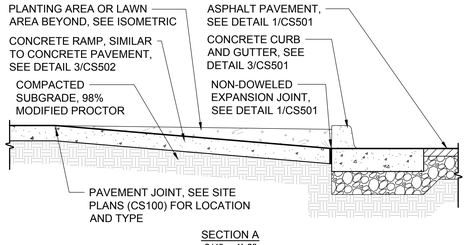

SECTION A
3/4" = 1'-0"

4 DEPRESSED CURB - TYPE 2 NTS

NOTES:
1. MAXIMUM RAMP RISE NOT TO EXCEED 6".
2. SEE ALSO CONCRETE PAVEMENT NOTES 3/CS502
3. TRUNCATED DOME WARNING MAT - 2' X 4' TRUNCATED DOME PAD, WET SET AND FASTEN PER MANUFACTURE RECOMMENDATION, COLOR TO BE RED TO MATCH EXISTING CAMPUS APPLICATIONS

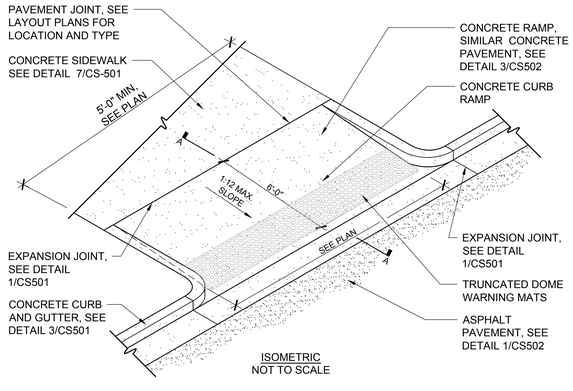

ISOMETRIC
NOT TO SCALE

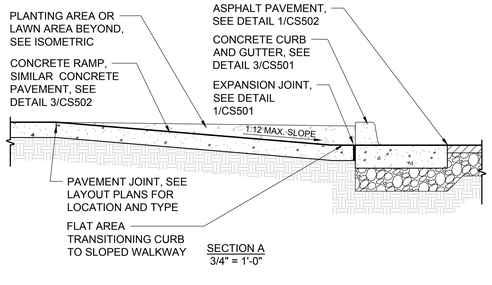

SECTION A
3/4" = 1'-0"

2 DEPRESSED CURB - TYPE 3 NTS

NOTES:
1. EXPANSION JOINTS SHALL BE LOCATED AS INDICATED ON THE SITE PLANS.
2. EXTEND EXPANSION JOINT 100% THROUGH PAVEMENT SURFACE.
3. ENSURE JOINTS ARE FREE OF NON-COMPRESSABLE MATERIALS DURING INSTALLATION AND AFTER INSTALLATION.
4. SEE CONTROL JOINT AND CONSTRUCTION JOINT DETAIL 1/CS501

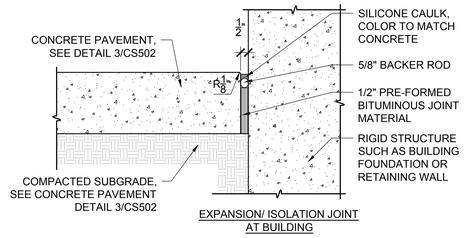

EXPANSION/ ISOLATION JOINT AT BUILDING

NOTES:
1. EXPANSION JOINTS SHALL BE LOCATED AS INDICATED ON THE SITE PLANS.
2. EXTEND EXPANSION JOINT 100% THROUGH PAVEMENT SURFACE.
3. ENSURE JOINTS ARE FREE OF NON-COMPRESSABLE MATERIALS DURING INSTALLATION AND AFTER INSTALLATION.
4. SEE CONTROL JOINT AND CONSTRUCTION JOINT DETAIL CS501

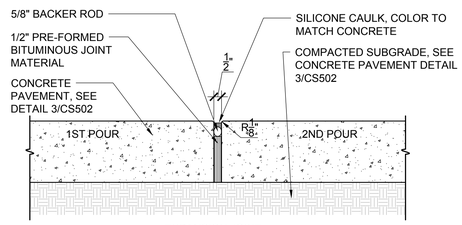

EXPANSION JOINT

NOTES:
1. CONTROL JOINTS SHALL BE LOCATED AS INDICATED ON SITE PLANS.
2. EXTEND JOINT GROOVE 1" BELOW FINISH GRADE OR 25% OF PAVEMENT THICKNESS WHICHEVER IS GREATER.
3. SEE EXPANSION/ISOLATION JOINT AND CONSTRUCTION JOINT DETAIL, CS501

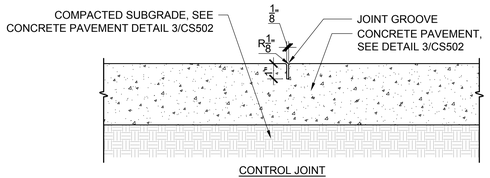

CONTROL JOINT

NOTES:
1. CONSTRUCTION JOINTS AS NEEDED AT CONTROL JOINT LOCATIONS AS INDICATED ON SITE PLANS.
2. EXTEND JOINT GROOVE 1" BELOW FINISH GRADE OR 25% OF PAVEMENT THICKNESS WHICHEVER IS GREATER
3. SEE EXPANSION/ISOLATION JOINT AND CONTROL JOINT DETAIL 1/CS501 .

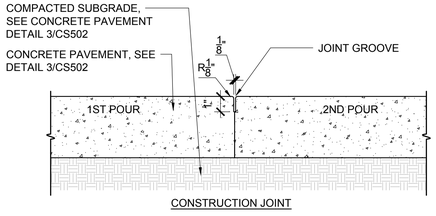

CONSTRUCTION JOINT

1 PAVEMENT JOINTING SCALE: 3" = 1'-0"

UNCW
UNIVERSITY of NORTH CAROLINA WILMINGTON
601 S COLLEGE ROAD
WILMINGTON, NORTH CAROLINA 28403

PARKING DECK II AND SURFACE PARKING (DESIGN-BUILD)
SOUTH CAMPUS - 4965 RIEGEL ROAD

SCO ID NUMBER: 18-19226-01A
CODE: 441828
ITEM: 301

CONTRACTOR
Balfour Beatty Construction

DESIGNER

CLARKNEXSEN
1523 ELIZABETH AVENUE, SUITE 300
CHARLOTTE, NORTH CAROLINA 28204
704·377·8800
CLARK NEXSEN LICENSE NUMBER: C-1028

CONSULTANTS

WALKER CONSULTANTS
13860 Ballantyne Corporate Place
Suite 140
Charlotte, NC 28277
T: 704.247.6230
www.walkerconsultants.com
NC License No. F-0518

McKIM&CREED
CIVIL ENGINEER
243 NORTH FRONT STREET
WILMINGTON, NORTH CAROLINA
28401
910.343.1048

CORPORATE SEAL

PROFESSIONAL SEAL

SUBMITTAL
04/15/2019
CONSTRUCTION DOCUMENT SUBMITTAL 01

REVISIONS

KEY PLAN

SHEET
SITE DETAILS

CS501

DESIGN: TRC
DRAWN: TRC
REVIEW: RMC

8/9/2018 4:16:18 PM
S:\49990016\80\Drawings\CS501_49990016.dwg

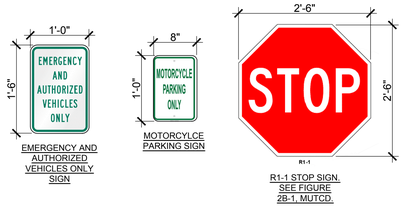

9 SIGNS

SCALE: NTS

NOTE:
1. SEE SITE PLAN SHEETS (CS100) FOR LOCATIONS
2. IMPRINTED ASPHALT TOPICAL TREATMENT TO BE APPLIED TO ASPHALT PAVEMENT TYPE 2, SEE DETAIL 1/CS502.
3. IMPRINTED ASPHALT COLOR TO BE BRICK RED TO MATCH EXISTING CAMPUS CROSSWALK APPLICATIONS.

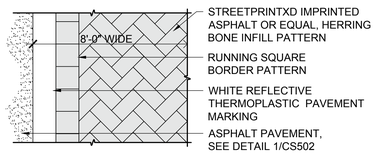

8 IMPRINTED ASPHALT CROSSWALK

SCALE: NTS

NOTES:
1. GENERALLY, PERMANENT MARKINGS WILL BE UNIFORM AND SMOOTH AND WILL CONSIST OF 120MIL OF THERMOPLASTIC FOR ALL LINES AND SYMBOLS; TEMPORARY MARKINGS SHALL CONSISTS OF 15 MIL PAINT, EVERY 6 MONTHS.
2. DURING APPLICATION THE EXISTING PAVEMENT SHALL NOT SHOW SIGNS OF MOISTURE AND BE CLEAN, FREE OF DIRT AND OIL, ETC. THERMOPLASTIC SHALL ONLY BE INSTALLED WHERE PAVEMENT IS 50° F AND RISING. PAINT SHALL ONLY BE INSTALLED WHERE PAVEMENT IS 40° F AND RISING.
3. SEE DETAIL 6/CS502 FOR PARKING LOT PAVEMENT MARKINGS.

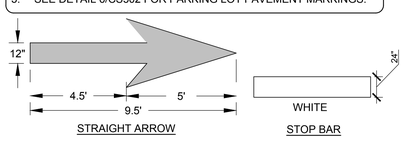

7 PAVEMENT MARKINGS

SCALE: NTS

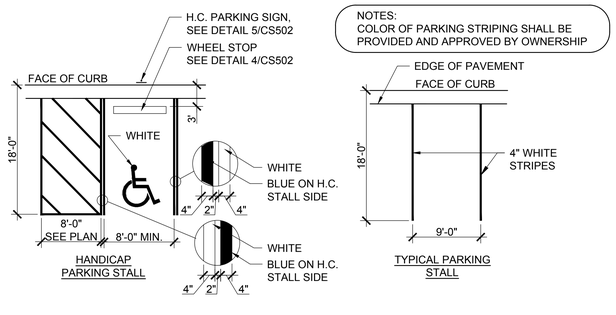

NOTES:
COLOR OF PARKING STRIPING SHALL BE PROVIDED AND APPROVED BY OWNERSHIP

6 ACCESSIBLE PARKING SIGN AND PARKING SPACE LAYOUT

NTS

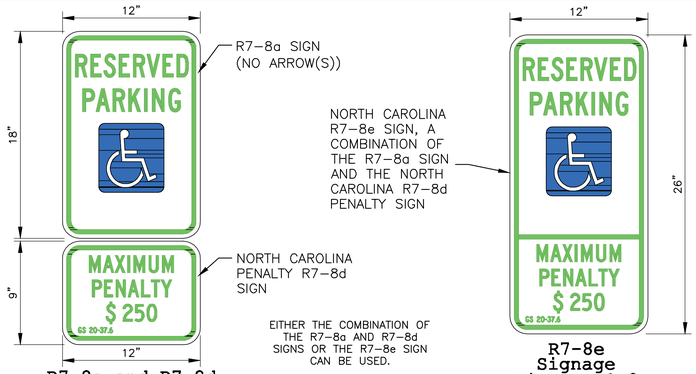

EITHER THE COMBINATION OF THE R7–8a AND R7–8d SIGNS OR THE R7–8e SIGN CAN BE USED.

R7-8a and R7-8d Signage Figure A1.1

R7-8e Signage Figure A1.2

WHERE VAN ACCESSIBLE PARKING IS PROVIDED, THE VAN ACCESSIBLE (R7–8P) SIGN SHALL BE MOUNTED BELOW THE OTHER ACCESSIBLE PARKING SIGNS. (2009 EDITION MUTCD SECTION 2B.47)

R7-8P Signage Figure A1.3

FOR DESIGN OF ACCESSIBLE SIGNS, SEE THE FOLLOWING:
- 2009 MUTCD OR LATEST EDITION.
- 2004 EDITION OF THE STANDARD HIGHWAY SIGNS AND THE 2012 SUPPLEMENT OR LATEST EDITION.
- NORTH CAROLINA 2009 SUPPLEMENT TO THE MANUAL OF UNIFORM TRAFFIC CONTROL DEVICES OR LATEST EDITION
- NCDOT DRAWING H–1_S FOR SIGNS SP00075, SP00076, AND SP00077.

NOTE:
REFER TO STRUCTURAL AND/OR ARCHITECTURE DRAWINGS FOR SIGNAGE INTERIOR TO PARKING DECK

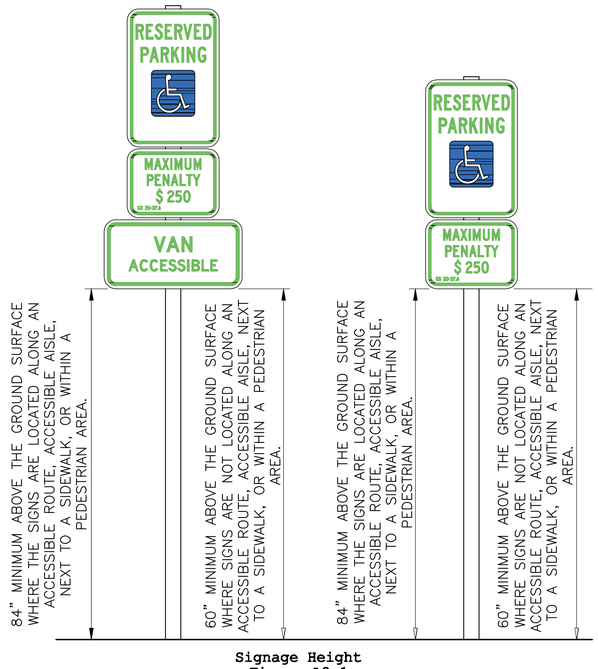

Signage Height Figure A2.1

5 ACCESSIBLE PARKING SIGNAGE

NTS

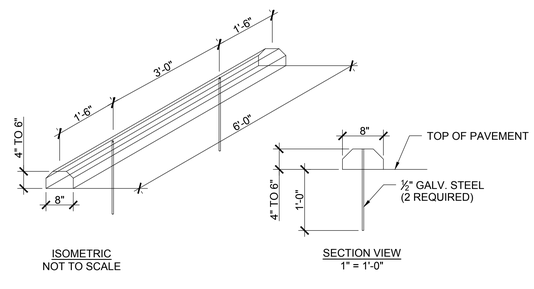

4 CONCRETE WHEEL STOP

SCALE = 1" = 1'-0"

NOTES:
1. ALL WALKWAYS SHALL MEET OR EXCEED GOVERNING MUNICIPALITIES REQUIREMENTS.
2. SUBGRADE SHALL NOT CONTAIN ANY ORGANIC MATTER.
3. REFER TO SITE PLANS FOR PAVEMENT JOINT TYPES AND LOCATIONS
4. PER ADA REQUIREMENTS: MAXIMUM CROSS SLOPE OF WALKING SURFACE SHALL NOT BE STEEPER THAN 1:48, MAXIMUM RUNNING SLOPE OF WALKING SURFACE SHALL NOT BE STEEPER THAN 1:20, WALKING SURFACES ALONG AN ACCESSIBLE ROUTE STEEPER THAN 1:20 REQUIRE RAMPS, RAMP RUNS WITH A RISE GREATER THAN 6" SHALL HAVE HANDRAILS, RAMP RUNS SHALL HAVE A RUNNING SLOPE NOT STEEPER THAN 1:12, MAXIMUM RISE PER RAMP IS 30", LANDINGS MUST BE PROVIDED WHERE NECESSARY. CONTRACTOR SHALL NOTIFY ENGINEER OF ANY DISCREPANCIES.

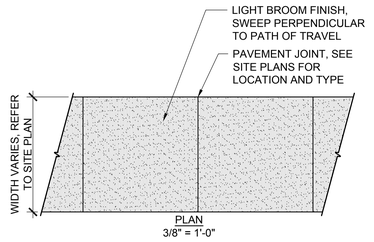

NOTE: PAVEMENT SHALL BE CONSTRUCTED OF 4,000 PSI CONCRETE. REINFORCEMENT SHALL BE WELDED WIRE FABRIC SPACED 6" O. C. BOTH DIRECTIONS, AS INDICATED BELOW. SURFACE FINISHES AND JOINTS SHALL BE AS INDICATED IN SPECIFICATIONS.

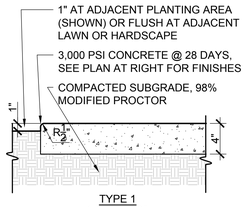

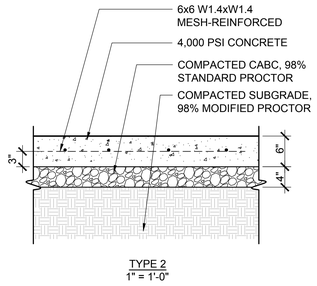

3 CONCRETE PAVEMENT - TYPE 1 AND 2

SCALE: 1" = 1'-0"

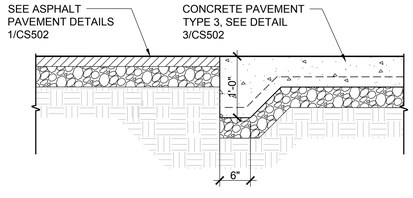

2 CONCRETE TO ASPHALT TRANSITION

NTS

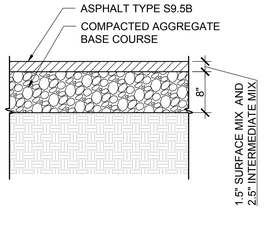

1 ASPHALT PAVEMENT

SCALE: 1" = 1'-0"

UNCW
UNIVERSITY of NORTH CAROLINA WILMINGTON
601 S COLLEGE ROAD
WILMINGTON, NORTH CAROLINA 28403

PARKING DECK II AND SURFACE PARKING (DESIGN-BUILD)
SOUTH CAMPUS - 4965 RIEGEL ROAD

SCO ID NUMBER: 18-19226-01A
CODE: 441828
ITEM: 301

CONTRACTOR
Balfour Beatty Construction

DESIGNER

CLARKNEXSEN
1523 ELIZABETH AVENUE, SUITE 300
CHARLOTTE, NORTH CAROLINA 28204
704·377·8800
CLARK NEXSEN LICENSE NUMBER: C-1028

CONSULTANTS

WALKER CONSULTANTS
13860 Ballantyne Corporate Place
Suite 140
Charlotte, NC 28277
T: 704.247.6230
www.walkerconsultants.com
NC License No. F-0518

McKIM&CREED
CIVIL ENGINEER
243 NORTH FRONT STREET
WILMINGTON, NORTH CAROLINA
28401
910.343.1048

CORPORATE SEAL

PROFESSIONAL SEAL

SUBMITTAL
04/15/2019
CONSTRUCTION DOCUMENT SUBMITTAL 01

REVISIONS

KEY PLAN

SHEET
SITE DETAILS

CS502

DESIGN: TRC
DRAWN: TRC
REVIEW: RMC

8/9/2019 4:16:18 PM
S:\4999001\080-Drawings\CS501_4999001f.dwg

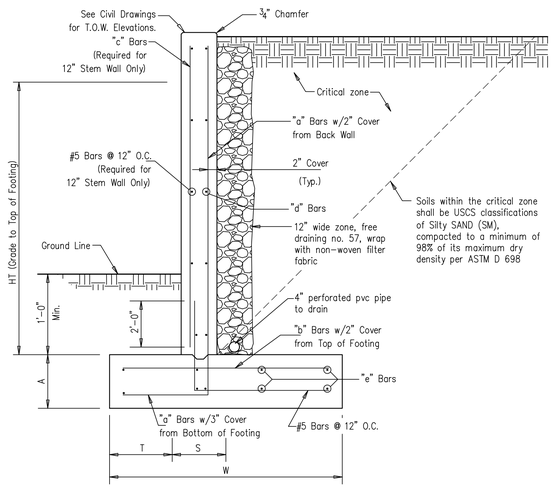

RETAINING WALL PROPORTIONS AND REINFORCING SCHEDULE									
HEIGHT (HT) RANGE	A	S	T	W	"a" BARS	"b" BARS	"c" BARS	"d" BARS	"e" BARS
0 FT. < HT < 4 FT.	12"	8"	1'-6"	4'-0"	#5 @ 12"	#5 @ 12"	NA	#5 @ 9"	#5 @ 12"
4 FT. < HT < 6 FT.	12"	8"	1'-6"	5'-0"	#6 @ 12"	#6 @ 12"	NA	#5 @ 9"	#5 @ 12"
6 FT. < HT < 8 FT.	15"	12"	2'-0"	7'-0"	#6 @ 12"	#6 @ 12"	#5 @ 12"	#5 @ 12"	#5 @ 10"
8 FT. < HT < 10 FT.	15"	12"	2'-0"	8'-0"	#7 @ 12"	#7 @ 12"	#5 @ 12"	#5 @ 12"	#5 @ 10"

4 CIP WALL SCHEDULE NTS

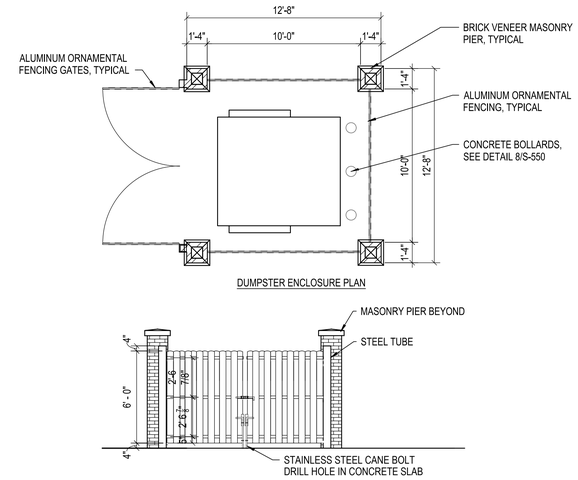

DUMPSTER ENCLOSURE PLAN

ELEVATION AT DUMPSTER ENCLOSURE GATES

WALL SECTION THROUGH DUMPSTER ENCLOSURE

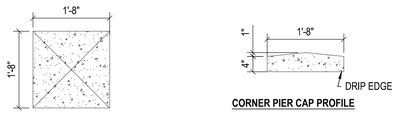

CORNER PIER CAP PLAN

CORNER PIER CAP PROFILE

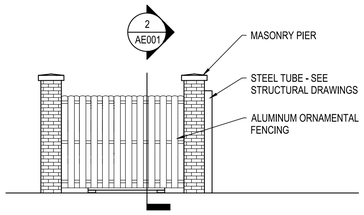

ELEVATION AT DUMPSTER ENCLOSURE - SIDE

3 DUMPSTER ENCLOSURE NTS

NOTES:
1. EXPANSION JOINT MATERIAL TO COMPLY WITH CURRENT NCDOT STANDARDS
2. 10' MAX CONTROL JOINT SPACING
3. MINIMUM INSTALLATION LENGTH IS 5 FT.
4. SITE CURBING TO ALIGN WITH CURBING WITHIN DECK, ALL DIMENSIONS TO MATCH, DECK DIMENSIONS SHALL GOVERN

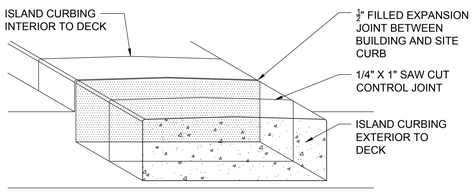

ISOMETRIC

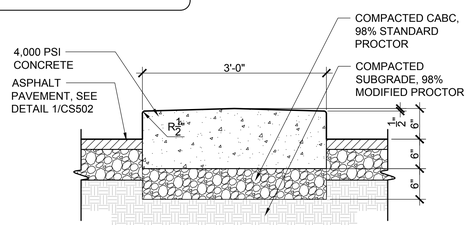

SECTION

5 ISLAND CURB NTS

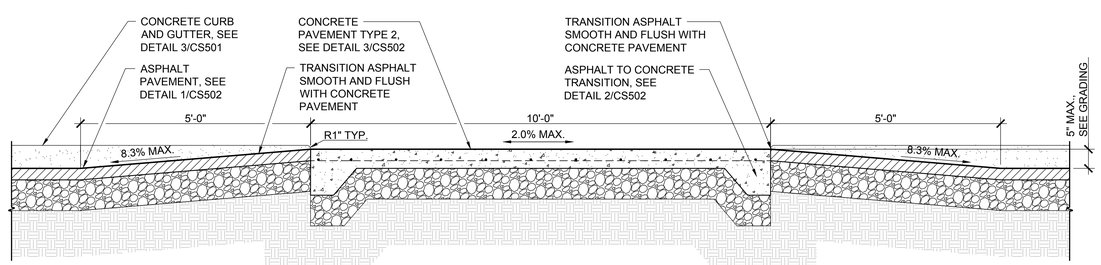

SECTION A
3/4" = 1'-0"

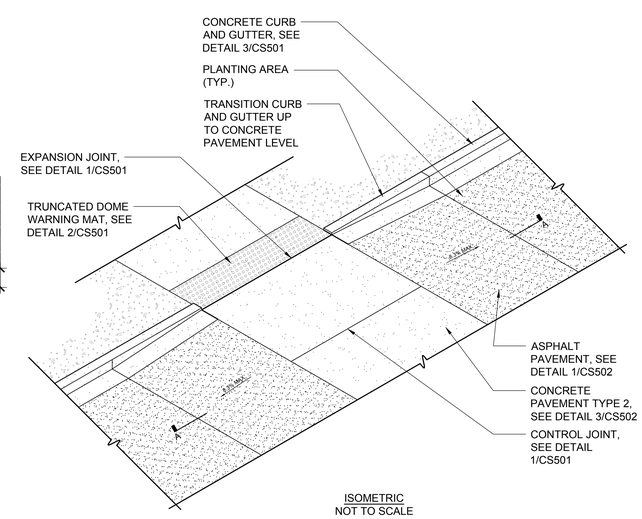

ISOMETRIC
NOT TO SCALE

1 RAISED CONCRETE CROSSWALK SCALE: 1" = 1'-0"

UNCW
UNIVERSITY of NORTH CAROLINA WILMINGTON
601 S COLLEGE ROAD
WILMINGTON, NORTH CAROLINA 28403

PARKING DECK II AND SURFACE PARKING (DESIGN-BUILD)
SOUTH CAMPUS - 4965 RIEGEL ROAD

SCO ID NUMBER: 18-19226-01A
CODE: 441828
ITEM: 301

CONTRACTOR
Balfour Beatty Construction

DESIGNER

CLARKNEXSEN
1523 ELIZABETH AVENUE, SUITE 300
CHARLOTTE, NORTH CAROLINA 28204
704·377·8800
CLARK NEXSEN LICENSE NUMBER: C-1028

CONSULTANTS

WALKER CONSULTANTS
13860 Ballantyne Corporate Place
Suite 140
Charlotte, NC 28277
T: 704.247.6230
www.walkerconsultants.com
NC License No. F-0518

McKIM&CREED
CIVIL ENGINEER
243 NORTH FRONT STREET
WILMINGTON, NORTH CAROLINA
28401
910.343.1048

CORPORATE SEAL

PROFESSIONAL SEAL
NOT FOR CONSTRUCTION
NORTH CAROLINA PROFESSIONAL ENGINEER SEAL 22805
RICHARD M. COLLINSWORTH

SUBMITTAL
04/15/2019
CONSTRUCTION DOCUMENT SUBMITTAL 01

REVISIONS

KEY PLAN

SHEET
SITE DETAILS

CS503

DESIGN: TRC
DRAWN: TRC
REVIEW: RMC

8/9/2018 4:16:18 PM
S:\49990016\BD\Drawings\CS501_49990016.dwg

NOTES:
A. PAVERS: CONCRETE PRECAST PAVERS, 2 3/8" THICK, SAILOR COURSE, INSTALL PER MANUFACTURER RECOMMENDATIONS
B. PAVERS SHALL BE INSTALLED IN COMPLIANCE WITH ADA GUIDELINES

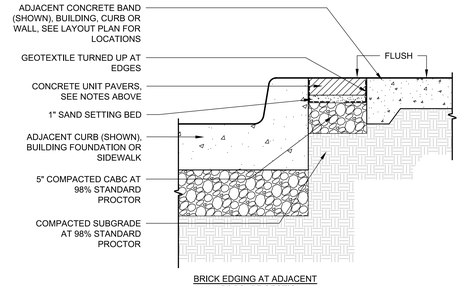

BRICK EDGING AT ADJACENT HARDSCAPE SECTION

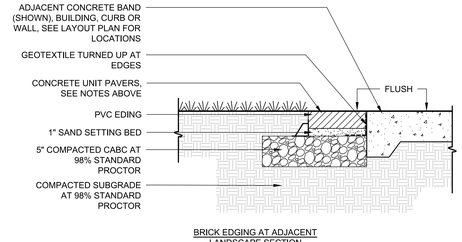

BRICK EDGING AT ADJACENT LANDSCAPE SECTION

1 BRICK BANDING (ALTERNATE #4) SCALE: 1/2" = 1'-0"

UNIVERSITY of NORTH CAROLINA WILMINGTON
601 S COLLEGE ROAD
WILMINGTON, NORTH CAROLINA 28403

PARKING DECK II AND SURFACE PARKING (DESIGN-BUILD)
SOUTH CAMPUS - 4965 RIEGEL ROAD

SCO ID NUMBER: 18-19226-01A
CODE: 441828
ITEM: 301

CONTRACTOR
Balfour Beatty Construction

DESIGNER

CLARKNEXSEN
1523 ELIZABETH AVENUE, SUITE 300
CHARLOTTE, NORTH CAROLINA 28204
704·377·8800
CLARK NEXSEN LICENSE NUMBER: C-1028

CONSULTANTS

WALKER CONSULTANTS
13860 Ballantyne Corporate Place
Suite 140
Charlotte, NC 28277
T: 704.247.6230
www.walkerconsultants.com
NC License No. F-0518

McKIM&CREED
CIVIL ENGINEER
243 NORTH FRONT STREET
WILMINGTON, NORTH CAROLINA
28401
910.343.1048

CORPORATE SEAL

PROFESSIONAL SEAL
NORTH CAROLINA PROFESSIONAL ENGINEER SEAL 22915 RICHARD M. COLLISON
NOT FOR CONSTRUCTION

SUBMITTAL
04/15/2019
CONSTRUCTION DOCUMENT SUBMITTAL 01

REVISIONS

KEY PLAN

SHEET
SITE DETAILS

CS504

DESIGN: TRC
DRAWN: TRC
REVIEW: RMC

8/9/2018 4:16:18 PM
S:\49990016\180\Drawings\CS501_49990016.dwg

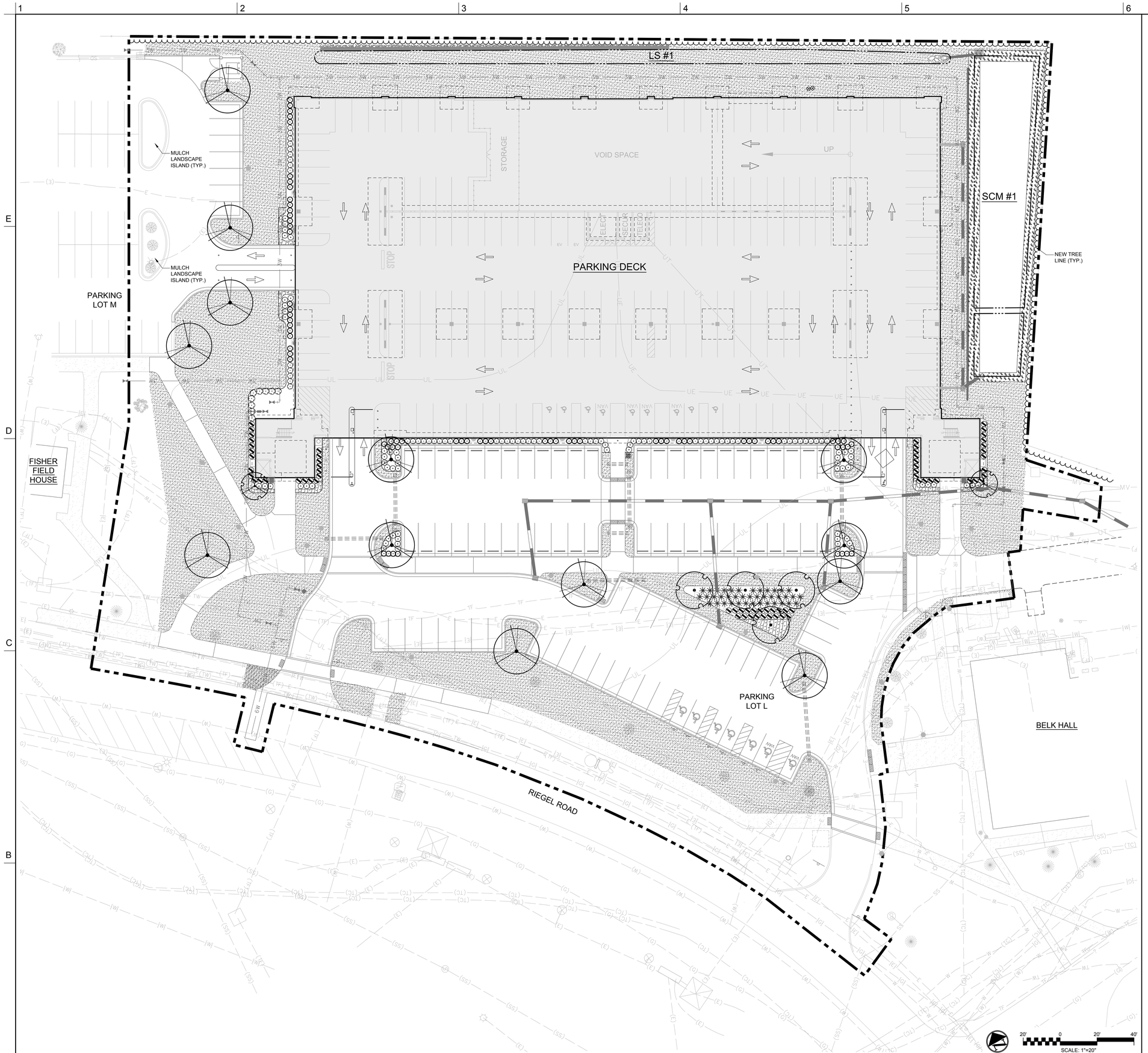

SCALE: 1" = 20'

2 LANDSCAPE PLAN

PLANT LEGEND

TREES	BOTANICAL / COMMON NAME
	ACER RUBRUM 'RED SUNSET' RED SUNSET MAPLE
	LAGERSTROEMIA INDICA 'BYER'S WONDERFUL WHITE' CRAPE MYRTLE
	PRUNUS SERRULATA 'KWANZAN' FLOWERING CHERRY

SHRUBS	BOTANICAL / COMMON NAME
	AZALEA ENCORE 'CORAL' TM ENCORE AZALEA
	ILEX CORNUTA 'CARISSA' CARISSA HOLLY
	ILEX GLABRA 'SHAMROCK' INKBERRY
	ILEX VOMITORIA 'NANA' DWARF YAUPON
	MUHLENBERGIA CAPILLARIS PINK MUHLY
	ROSA X 'NOVAROSPOP' POPCORN DRIFT ROSE

GROUND COVERS	BOTANICAL / COMMON NAME
	CYNODON DACTYLON BERMUDA GRASS
	JUNIPERUS CONFERTA 'BLUE PACIFIC' BLUE PACIFIC JUNIPER
	VEGETATIVE SHELF PLANTING

SCALE: NTS

1 LEGEND/NOTES

UNCW
UNIVERSITY of NORTH CAROLINA WILMINGTON
601 S COLLEGE ROAD
WILMINGTON, NORTH CAROLINA 28403

PARKING DECK II AND SURFACE PARKING (DESIGN-BUILD)
SOUTH CAMPUS - 4965 RIEGEL ROAD

SCO ID NUMBER: 18-19226-01A
CODE: 441828
ITEM: 301

CONTRACTOR
Balfour Beatty Construction

DESIGNER
CLARKNEXSEN
1523 ELIZABETH AVENUE, SUITE 300
CHARLOTTE, NORTH CAROLINA 28204
704·377·8800
CLARK NEXSEN LICENSE NUMBER: C-1028

CONSULTANTS
WALKER CONSULTANTS
13860 Ballantyne Corporate Place
Suite 140
Charlotte, NC 28277
T: 704.247.6230
www.walkerconsultants.com
NC License No. F-0518

McKIM&CREED
CIVIL ENGINEER
243 NORTH FRONT STREET
WILMINGTON, NORTH CAROLINA
28401
910.343.1048

CORPORATE SEAL

PROFESSIONAL SEAL
NOT FOR CONSTRUCTION

SUBMITTAL
04/15/2019
CONSTRUCTION DOCUMENT SUBMITTAL 01

REVISIONS

KEY PLAN

SHEET
LANDSCAPE PLAN

CL100

DESIGN: TRC
DRAWN: TRC
REVIEW: RMC

8/9/2018 4:16:18 PM
S:\49990016\980\Drawings\CL100_49990016.dwg

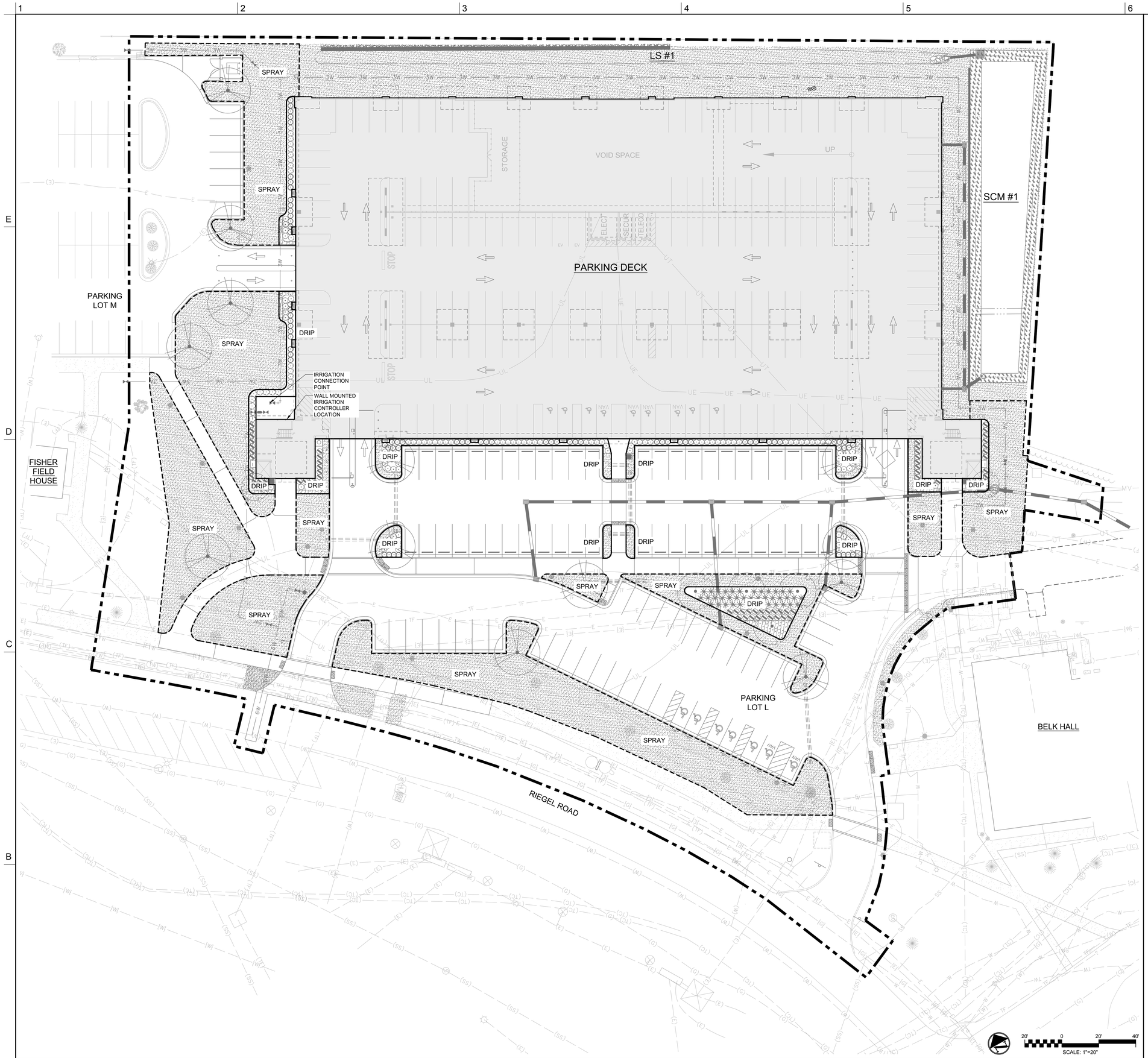

LEGEND

SPRAY	POP-UP SPRAY IRRIGATED AREA (26,500 SF APPROX.)
DRIP	DRIP IRRIGATED AREA (5,100 SF APPROX.)

NOTES

1. THIS IRRIGATION PLAN IS CONCEPTUAL IN NATURE TO ILLUSTRATE AREAS TO BE IRRIGATED AND GENERAL DESIGN PARAMETERS. THE FINAL IRRIGATION SYSTEM WILL BE A DESIGN ASSIST PROCUREMENT METHOD BY THE CONTRACTOR.
2. MAIN LINE AND LATERAL LINES SHALL BE SLEEVED UNDER ALL DRIVEWAYS AND WALKWAY, SEE CG100.
3. VALVE BOXES AND EQUIPMENT INSTALLED ABOVE GRADE SHALL BE PLACED IN PLANTING BEDS WHERE POSSIBLE.
4. TREES SHALL BE IRRIGATION VIA A 2' DIAMETER DRIP LINE RING.
5. TURF AREAS SHALL BE IN SEPARATE ZONES FROM TREES AND SHRUBS .
6. CONTRACTOR TO PROVIDE AS-BUILT DRAWINGS DUE AT FINAL INSPECTIONS.
7. SPRAY HEADS SHALL PROVIDED HEAD TO HEAD COVERAGE.

A 2 IRRIGATION PLAN SCALE: 1" = 20'

1 LEGEND/NOTES SCALE: NTS

UNCW
UNIVERSITY of NORTH CAROLINA WILMINGTON
601 S COLLEGE ROAD
WILMINGTON, NORTH CAROLINA 28403

PARKING DECK II AND SURFACE PARKING (DESIGN-BUILD)
SOUTH CAMPUS - 4965 RIEGEL ROAD

SCO ID NUMBER: 18-19226-01A
CODE: 441828
ITEM: 301

CONTRACTOR
Balfour Beatty Construction

DESIGNER
CLARKNEXSEN
1523 ELIZABETH AVENUE, SUITE 300
CHARLOTTE, NORTH CAROLINA 28204
704·377·8800

CLARK NEXSEN LICENSE NUMBER: C-1028

CONSULTANTS
WALKER CONSULTANTS
13860 Ballantyne Corporate Place
Suite 140
Charlotte, NC 28277
T: 704.247.6230
www.walkerconsultants.com
NC License No. F-0518

McKIM&CREED
CIVIL ENGINEER
243 NORTH FRONT STREET
WILMINGTON, NORTH CAROLINA
28401
910.343.1048

CORPORATE SEAL

PROFESSIONAL SEAL
NOT FOR CONSTRUCTION
NORTH CAROLINA PROFESSIONAL ENGINEER SEAL 22910 RICHARD M. COLLINS

SUBMITTAL
04/15/2019
CONSTRUCTION DOCUMENT SUBMITTAL 01

REVISIONS

KEY PLAN

SHEET
IRRIGATION PLAN

CI100

DESIGN: TRC
DRAWN: TRC
REVIEW: RMC

8/9/2018 4:16:18 PM
S:\49990016\980\Drawings\CI100_49990016.dwg

A. ALL EXISTING VEGETATION THAT IS USED TO MEET LANDSCAPING REQUIREMENTS, ALL REQUIRED PLANTED LIVING MATERIAL, AND ALL REQUIRED BERMS SHALL BE MAINTAINED BY THE OWNER OF THE PROPERTY ON A CONTINUING BASIS. ANY PLANTED MATERIAL WHICH BECOMES DAMAGED OR DISEASED OR DIES SHALL BE REPLACED BY THE OWNER WITHIN 60 DAYS OF THE OCCURRENCE OF SUCH CONDITION. IF, IN THE OPINION OF THE ZONING ADMINISTRATOR THERE ARE SEASONAL CONDITIONS WHICH WILL NOT PERMIT THE TIMELY REPLACEMENT OF THE VEGETATION (E.G. TOO HOT OR TOO COOL FOR SUCCESSFUL REPLANTING) THIS REQUIREMENT MAY BE ADMINISTRATIVELY WAIVED UNTIL A TIME CERTAIN WHEN THE REPLANTING WOULD BE SUCCESSFUL.

B. VERIFICATION OF TOTAL LANDSCAPE MATERIAL QUANTITIES AS SHOWN ON THE LANDSCAPE PLANS AND IN THE PLANT LIST SHALL BE THE RESPONSIBILITY OF THE LANDSCAPE CONTRACTOR. THE LANDSCAPE ARCHITECT SHALL BE NOTIFIED OF ANY DISCREPANCIES PRIOR TO FINAL BIDDING OR INSTALLATION.

C. ALL PLANTING TYPES SHALL COMPLY WITH LOCAL GOVERNING CODES AND REGULATIONS, CONFORM TO REQUIREMENTS OF PLANT LIST AND TO THE AMERICAN ASSOCIATION OF NURSERYMEN "AMERICAN STANDARD OF NURSERY STOCK" AND "HORTICULTURAL STANDARDS" AS TO SPECIES, AGE, SIZE, AND PLANTING RECOMMENDATIONS.

D. LANDSCAPE MATERIAL PLACED IN PREPARED HOLES SHALL BE PROPERLY BACKFILLED PRIOR TO THE END OF THE WORKING DAY.

E. ALL SAUCERS SHALL BE SOAKED WITH WATER AND MULCHED IMMEDIATELY FOLLOWING INSTALLATION.

F. ALL PREPARED GROUND COVER AND ANNUAL BED INSTALLATIONS SHALL BE PROPERLY SOAKED AND MULCHED PRIOR TO THE END OF THE DAY.

G. LANDSCAPE ARCHITECT SHALL APPROVE ANY ON-SITE PLANT STORAGE AREA FOR ACCESSIBILITY, SHADE CONDITIONS, HEALING-IN MULCH MATERIAL AND TEMPORARY WATERING METHODS.

H. ALL ROPE AND WRAPPING TWINE SHALL BE CUT AND REMOVED FROM AROUND THE UPPER PARTS OF THE ROOT BALL. METAL BASKET WIRES AND BURLAP SHALL BE PULLED BACK AND TUCKED UNDER THE EDGES OF THE SAUCER RINGS ON ALL TREES AND LARGE SHRUBS. ALL SYNTHETIC BURLAP SHALL BE REMOVED FROM PLANT BALLS PRIOR TO BACK FILLING.

I. ALL PLANT BEDS OR RAISED SAUCER RINGS SHALL BE EDGED WITH SMOOTH, CONTINUOUS CURVES.

J. ALL PLANT MATERIAL SHALL BE PLANTED AT HEIGHTS AND WIDTHS AS ILLUSTRATED IN PLANTING DETAILS.

K. TREE GUYING SHALL BE PERFORMED WITHIN A WEEK OF PLANTING. THE LANDSCAPE CONTRACTOR SHALL BE RESPONSIBLE FOR REMOVING ALL TREE GUYING STRAPPING AND STAKES AFTER THE FIRST FULL GROWING SEASON OR ONE YEAR, WHICH EVER COMES FIRST.

L. CONTRACTOR SHALL VERIFY LOCATIONS OF UNDERGROUND UTILITIES PRIOR TO PLANTING.

M. ANY EXPOSED OR UNCOVERED LINES SHALL BE SHOWN TO GENERAL CONTRACTOR PRIOR TO BACKFILLING.

N. ALL PLANT BEDS AND RAISED SAUCER RINGS SHALL BE GRADED TO PROVIDE ADEQUATE DRAINAGE AND SHALL BE MULCHED AS SPECIFIED.

O. ALL MATERIALS, PLANTING AND LANDSCAPE WORK SHALL CONFORM TO THE CURRENT MUNICIPAL AUTHORITIES STANDARD SPECIFICATIONS AND DETAILS.

P. ALL LANDSCAPE AREAS THAT ARE NOT PLANTED AND MULCHED OR PAVED SHALL BE SEEDED OR SODDED.

Q. FIRST YEAR PRUNING OF TREE CROWN SHALL BE LIMITED TO REMOVAL OF DEAD & DAMAGED WOOD.

R. TREE PROTECTION FENCE SHALL BE INSTALL. INSPECTED AND APPROVED PRIOR TO CLEARING, GRADING AND CONSTRUCTION ACTIVITY OR ISSUANCE OF ANY RELATED PERMITS. NO CONSTRUCTION WORKERS, TOOLS, MATERIALS OR VEHICLES ARE PERMITTED WITHIN THE TREE PROTECTION FENCING.

S. MULCH LINE SMOOTH CONTINUOUS CURVES. CLEAR OUT FIRST 5' FROM DEBRIS AND UNDERBRUSH AT AREAS OF EXISTING VEGETATION TO REMAIN.

T. ALL TREES NOT WITHIN A PLANT BED TO BE TREATED WITH A 6' DIAMETER MULCH RING TYPICAL, UNLESS OTHERWISE INDICATED ON THE PLANTING PLANS.

U. ALL TREES TO HAVE A MINIMUM 2" CALIPER AT THE TIME OF PLANTING, UNLESS OTHERWISE INDICATED IN THE PLANTING SPECIFICATION. CALIPER TO BE MEASURED 48" ABOVE THE ROOT BALL.

V. TREES SHALL BE LOCATED A MINIMUM OF 5 FEET FROM SEWER/WATER CONNECTIONS OR AS OTHERWISE DICTATED BY LOCAL REGULATIONS. CONTRACTOR SHALL BE LIABLE FOR DAMAGE TO ANY AND ALL PUBLIC OR PRIVATE UTILITIES.

W. SUBSTITUTIONS OF PLANT MATERIALS SPECIFIED CAN ONLY OCCUR WITH PRIOR APPROVAL BY LANDSCAPE ARCHITECT.

X. ESTABLISH PLANT BED CONFIGURATION. LANDSCAPE ARCHITECT TO APPROVE BED LAYOUT IN FIELD.

Y. AREAS DAMAGED BY ACTIVITIES OF CONTRACTOR SHALL BE RE-ESTABLISHED TO PRE-DISTURBANCE CONDITION AT NO ADDITIONAL COST TO THE OWNER.

Z. USE HERBICIDES, PESTICIDES, AND FERTILIZER IN A MANNER CONSISTENT WITH THE FEDERAL INSECTICIDE, FUNGICIDE, AND RODENTICIDE ACT AND IN ACCORDANCE WITH LABEL RESTRICTIONS.

AA. CONTRACTOR SHALL INSURE THAT ALL PLANT MATERIAL IS FREE OF FIRE ANTS PRIOR TO INSTALLATION.

AB. LANDSCAPE ARCHITECT OR OWNER SHALL APPROVE PLACEMENT OF TREES PRIOR TO PLANTING.

6 GENERAL LANDSCAPE NOTES

SCALE: NTS

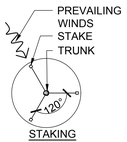

STAKING PLAN

GENERAL NOTES:
A. TREE TO BE STRAIGHTENED PRIOR TO BACKFILL AND GUYING
B. SCARIFY BOTTOM AND SIDES OF PLANT PIT.
C. STAKE AND GUY TREES 3" CALIPER OR GREATER, OR TREES IN WINDING LOCATIONS AS DIRECTED BY LANDSCAPE ARCHITECT.
D. DO NOT WRAP TREE TRUNK.
E. MARK NORTH SIDE OF TREE AT NURSERY AND PLANT WITH MARKING FACING NORTH.
F. BACKFILL PLANTING PITS WITH TOPSOIL MIXTURE AS SPECIFIED, PACK SOIL AROUND BASE OF ROOTBALL TO STABILIZE, INSTALL REMAINDER IN 9" LAYERS, HAND TAMP TO REMOVE VOIDS AND WATER EACH LAYER

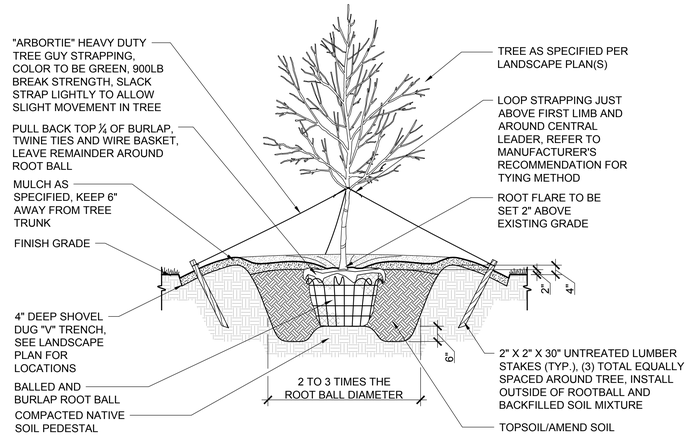

SECTION

5 TYPICAL TREE PLANTING

SCALE: 1/2" = 1'-0"

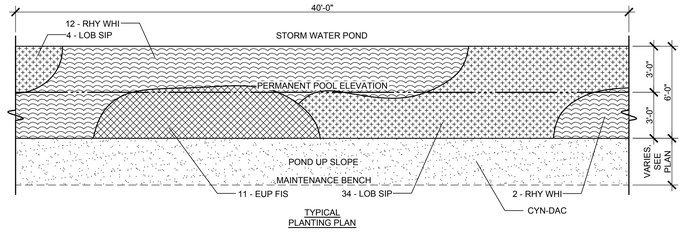

TYPICAL PLANTING PLAN

TYPICAL PLANTING SCHEDULE PER 40' LF

SUBMERSIBLE	CODE	BOTANICAL NAME	COMMON NAME	SIZE	HEIGHT	SPACING	QTY
	EUP FIS	EUPATORIADELPHUS FISTULOSUS	JOE PYE WEED	1 GAL.	18"-24" HT.	30" O.C.	8
	LOB SIP	LOBELIA SIPHILITICA	GREAT LOBELIA	5" DEEP PLUG	12"-18" HT.	18" O.C.	38
	RHY WHI	RHYNCHOSPORA COLORATA	STARRUSH WHITETOP	4" POT	12"-18" HT.	36" O.C.	14

GROUND COVERS	CODE	BOTANICAL NAME	COMMON NAME	SIZE	SPACING	QTY
	CYN DAC	CYNODON DACTYLON	BERMUDA GRASS	SEED	3 LBS / 1000 SF	SEE PLAN

3 VEGETATIVE SHELF PLANTING

SCALE: 1/2" = 1'-0"

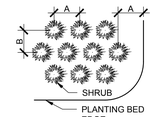

PLANT SPACING PLAN

PLANT SPACING CHART

SPACING (A)	ROW OFFSET (B)	SPACING (A)	ROW OFFSET (B)
1'-0" O.C.	10" O.C.	5'-0" O.C.	4'-4" O.C.
1'-6" O.C.	1'-4" O.C.	6'-0" O.C.	5'-2" O.C.
2'-0" O.C.	1'-9" O.C.	7'-0" O.C.	6'-1" O.C.
2'-6" O.C.	2'-2" O.C.	8'-0" O.C.	6'-11" O.C.
3'-0" O.C.	2'-7" O.C.	9'-0" O.C.	7'-10" O.C.
3'-6" O.C.	3'-0" O.C.	10'-0" O.C.	8'-8" O.C.
4'-0" O.C.	3'-6" O.C.		

GENERAL NOTES:
A. SCARIFY BOTTOM AND SIDES OF PLANTING PIT.
B. THE BOTTOM OF SHRUB ROOT BALLS SHALL NOT PROJECT INTO THE NATIVE SUBGRADE . LARGER PLANTS WILL REQUIRE ADDITIONAL TOPSOIL DEPTH.
C. BACKFILL PLANTING PITS WITH TOPSOIL MIXTURE AS SPECIFIED, INSTALL IN 6" LAYERS, HAND TAMP TO REMOVE VOIDS AND WATER EACH LAYER
D. ALL ROOT BALLS REMOVED FROM CONTAINERS SHALL BE SCARIFIED BY HAND PRIOR TO PLACEMENT AND BACKFILLING WITH PREPARED SOILS. HAND TOOLS SHALL NOT BE USED TO SCARIFY ROOT BALLS.
E. REFER TO GRADING PLANS FOR MOUND HEIGHTS.

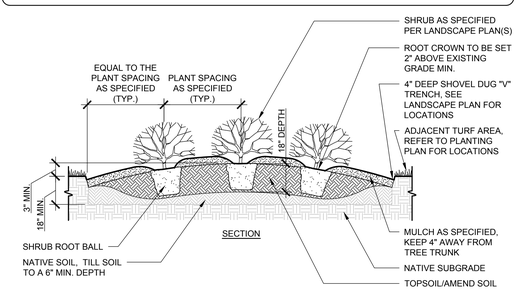

SECTION

2 TYPICAL SHRUB PLANTING

SCALE = 1/2" = 1'-0"

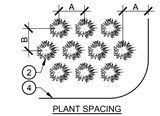

PLANT SPACING PLAN

PLANT SPACING CHART

SPACING (A)	ROW OFFSET (B)	SPACING (A)	ROW OFFSET (B)
6" O.C.	5" O.C.	24" O.C.	1'-9" O.C.
8" O.C.	7" O.C.	36" O.C.	2'-7" O.C.
12" O.C.	10" O.C.	4'-0" O.C.	3'-6" O.C.
15" O.C.	1'-1" O.C.	5'-0" O.C.	4'-4" O.C.
18" O.C.	1'-4" O.C.	6'-0" O.C.	5'-2" O.C.

GENERAL NOTES:
A. SCARIFY BOTTOM AND SIDES OF PLANTING PIT.
B. THE BOTTOM OF GROUND COVER ROOT BALLS SHALL NOT PROJECT INTO THE NATIVE SUBGRADE . LARGER PLANTS WILL REQUIRE ADDITIONAL TOPSOIL DEPTH.
C. BACKFILL PLANTING PITS WITH TOPSOIL MIXTURE AS SPECIFIED, INSTALL IN 6" LAYERS, HAND TAMP TO REMOVE VOIDS AND WATER EACH LAYER
D. ALL ROOT BALLS REMOVED FROM CONTAINERS SHALL BE SCARIFIED BY HAND PRIOR TO PLACEMENT AND BACKFILLING WITH PREPARED SOILS. HAND TOOLS SHALL NOT BE USED TO SCARIFY ROOT BALLS.
E. REFER TO GRADING PLANS FOR MOUND HEIGHTS.

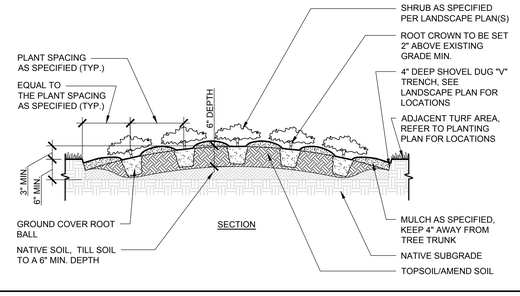

SECTION

1 GROUND COVER PLANTING

SCALE: 1/2" = 1'-0

PLANT SCHEDULE

TREES	BOTANICAL NAME	COMMON NAME	SIZE	CALIPER	HEIGHT	QTY	REMARKS
	ACER RUBRUM `RED SUNSET`	RED SUNSET MAPLE	B & B	3" CAL.	12`-14` HT.	13	UNIFORM HEAD & MATCHED
	LAGERSTROEMIA INDICA `BYER`S WONDERFUL WHITE`	CRAPE MYRTLE	B & B	2" CAL.	8`-10` HT.	2	UNIFORM HEAD & MATCHED, 3 TRU
	PRUNUS SERRULATA `KWANZAN`	FLOWERING CHERRY	B & B	2" CAL.	8`-10` HT.	4	UNIFORM HEAD & MATCHED

SHRUBS	BOTANICAL NAME	COMMON NAME	SIZE	HEIGHT	SPREAD	SPACING	QTY	REMARKS
	AZALEA ENCORE `CORAL` TM	ENCORE AZALEA	3 GAL.	18"-24" HT.	18"-24" SPD.	3` O.C.	56	UNIFORM HEAD & MATCHED
	ILEX CORNUTA `CARISSA`	CARISSA HOLLY	3 GAL.	18"-24" HT.	18"-24" SPD.	3` O.C.	71	UNIFORM HEAD & MATCHED
	ILEX GLABRA `SHAMROCK`	INKBERRY	3 GAL.	15"-18" HT.	15"-18" SPD.	3` O.C.	9	UNIFORM HEAD & MATCHED
	ILEX VOMITORIA `NANA`	DWARF YAUPON	3 GAL.	12"-15" HT.	12"-15" SPD.	2.5` O.C.	66	UNIFORM HEAD & MATCHED
	MUHLENBERGIA CAPILLARIS	PINK MUHLY	3 GAL.	18"-24" HT.	18"-24" SPD.	4` O.C.	40	UNIFORM HEAD & MATCHED
	ROSA X `NOVAROSPOP`	POPCORN DRIFT ROSE	3 GAL.	15"-18" HT.	15"-18" SPD.	3` O.C.	64	UNIFORM HEAD & MATCHED

GROUND COVERS	BOTANICAL NAME	COMMON NAME	SIZE	SPACING	SPACING	QTY	REMARKS
	CYNODON DACTYLON	BERMUDA GRASS	SOD			41,693 SF	
	JUNIPERUS CONFERTA `BLUE PACIFIC`	BLUE PACIFIC JUNIPER	1 GAL.	48" O.C.	48" o.c.	28	MATCHED
	VEGETATIVE SHELF PLANTING	-	-	-		2,340 SF	SEE VEGETATIVE SHELF PLANTING

4 PLANT SCHEDULE

SCALE: 1/2" = 1'-0

8/9/2018 4:16:18 PM
S:\49990016\80-Drawings\CL501_49990016.dwg

UNCW
UNIVERSITY of NORTH CAROLINA WILMINGTON
601 S COLLEGE ROAD
WILMINGTON, NORTH CAROLINA 28403

PARKING DECK II AND SURFACE PARKING (DESIGN-BUILD)
SOUTH CAMPUS - 4965 RIEGEL ROAD

SCO ID NUMBER: 18-19226-01A
CODE: 441828
ITEM: 301

CONTRACTOR
Balfour Beatty Construction

DESIGNER

CLARKNEXSEN
1523 ELIZABETH AVENUE, SUITE 300
CHARLOTTE, NORTH CAROLINA 28204
704·377·8800
CLARK NEXSEN LICENSE NUMBER: C-1028

CONSULTANTS

WALKER CONSULTANTS
13860 Ballantyne Corporate Place
Suite 140
Charlotte, NC 28277
T: 704.247.6230
www.walkerconsultants.com
NC License No. F-0518

McKIM&CREED
CIVIL ENGINEER
243 NORTH FRONT STREET
WILMINGTON, NORTH CAROLINA
28401
910.343.1048

CORPORATE SEAL

PROFESSIONAL SEAL
NOT FOR CONSTRUCTION

SUBMITTAL
04/15/2019
CONSTRUCTION DOCUMENT SUBMITTAL 01

REVISIONS

KEY PLAN

SHEET
LANDSCAPE DETAILS

CL501

DESIGN: TRC
DRAWN: TRC
REVIEW: RMC

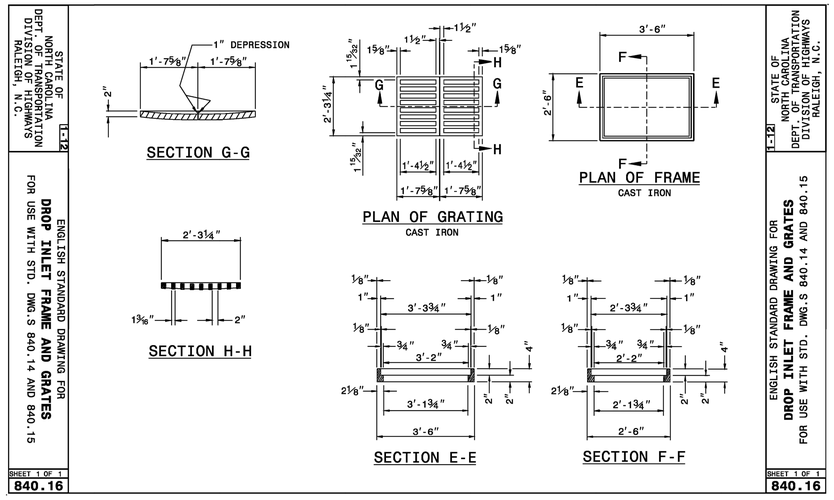

4 DROP INLET FRAME AND GRATES NTS

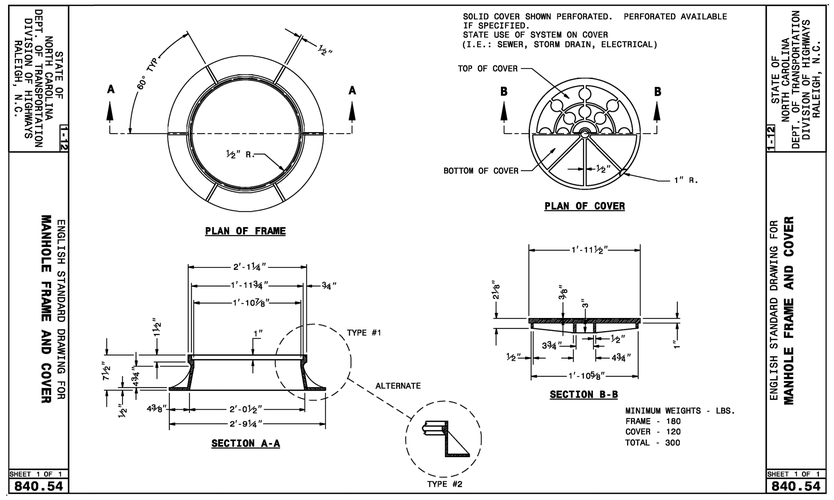

3 MANHOLE FRAME AND COVER NTS

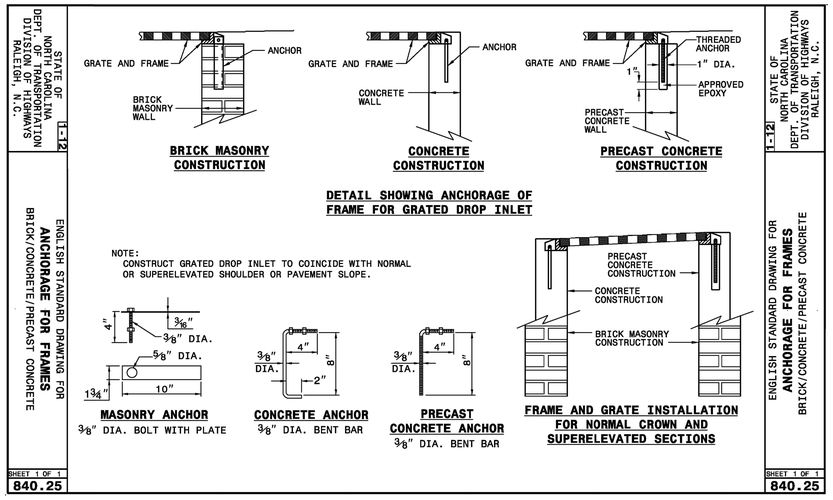

6 ANCHORAGE FOR FRAMES NTS

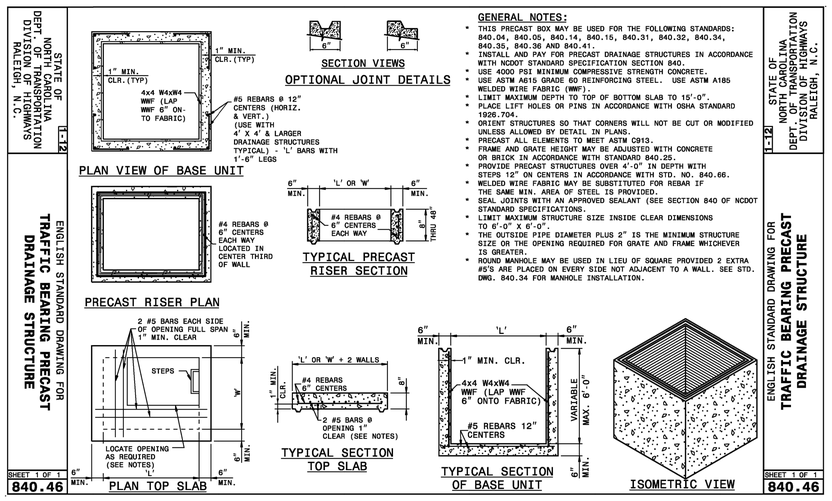

5 TRAFFIC BEAR PRECAST DRAINAGE STRUCTURE NTS

STORM DRAINAGE BEDDING NOTES

1. EXCAVATION FOR STORM DRAINAGE PIPE SHALL BE TO THE LINES AND GRADES AS SHOWN ON THE PLANS.
2. THE BEDDING SHALL BE SHAPED IN ACCORDANCE WITH CLASS "C" BEDDING.
3. THE BEDDING SHALL PROVIDE A FIRM FOUNDATION OF UNIFORM DENSITY ALONG THE ENTIRE LENGTH OF PIPE. RECESSES SHALL BE MADE TO ACCOMMODATE BELLS AND JOINTS.
4. WHERE UNSTABLE SOILS ARE ENCOUNTERED AS DETERMINED BY GEOTECHNICAL ENGINEER, A MINIMUM 4-INCH THICK BEDDING OF STONE SHALL BE PLACED.
5. THE STONE SHALL BE UNIFORMLY GRADED FROM 3/4 INCH TO NO. 4 IN ACCORDANCE WITH ASTM C-33. CARE SHALL BE TAKEN TO PREVENT UNDERCUTTING IN SUITABLE SOIL.
6. AREAS UNDERCUT SHALL BE FILLED WITH SUITABLE SOIL AND COMPACTED TO 95% OF MAXIMUM DENSITY AT OPTIMUM MOISTURE CONTENT AS DETERMINED BY ASTM D 1557 STANDARD TEST METHOD.

STORM DRAINAGE NOTES:

1. ALL PIPE BEDDING SHALL BE CLASS "C" UNLESS OTHERWISE DIRECTED BY THE ENGINEER.
2. ALL STORM DRAINAGE PIPES SHALL BE HDPE UNLESS OTHERWISE NOTED ON THE PLANS.
3. DO NOT PLANT TREES WITHIN UTILITY AND DRAINAGE EASEMENTS.
4. THE ENGINEER AND THE CONTRACTOR SHALL INSPECT ALL EXISTING PIPES USED IN THE FINAL DRAINAGE SYSTEM AND AGREE ON THE CONDITION OF THE PIPES PRIOR TO CONSTRUCTION. IF DAMAGE OCCURS TO THESE PIPES DURING CONSTRUCTION, THE CONTRACTOR SHALL BE RESPONSIBLE FOR THE REPAIR OR REPLACEMENT OF THE PIPE(S).
5. THE CONTRACTOR SHALL CONTACT NC 811 BEFORE COMMENCING ANY WORK. THE CONTRACTOR SHALL ALSO OBTAIN A UNCW DIG PERMIT. THE CONTRACTOR SHALL VERIFY THE LOCATION OF ALL UNDERGROUND UTILITIES WHETHER INDICATED ON THE DRAWINGS OR NOT. THE CONTRACTOR WILL ASSURE THE PRESENCE ONSITE OF A REPRESENTATIVE OF THE GAS COMPANY WHEN WORKING IN THE VICINITY OF ANY GAS MAINS.

2 STORM DRAINAGE NOTES NTS

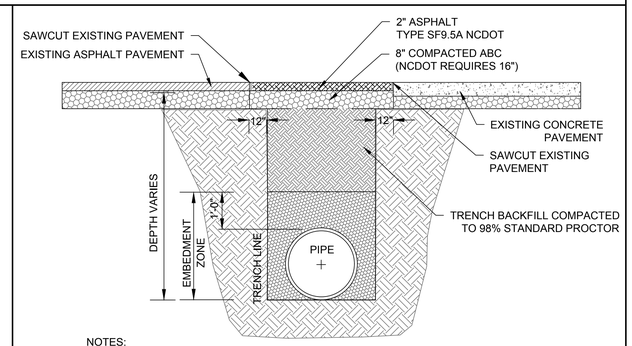

NOTES:

* BACKFILL TO BE INSTALLED IN 6" LIFTS (MAXIMUM) AND COMPACTED TO A MINIMUM DENSITY OF 95% AS DETERMINED BY THE MODIFIED A.A.S.H.T.O. STANDARD METHOD T-99
* CUT - BACK TO BE PREPARED AFTER TRENCH BACKFILLING AND COMPACTION

STANDARD SHOWING METHOD MAKING PAVEMENT REPAIRS WHERE PIPE IS INSTALLED

1 PAVEMENT REPAIR DETAIL NTS

UNCW
UNIVERSITY of NORTH CAROLINA WILMINGTON
601 S COLLEGE ROAD
WILMINGTON, NORTH CAROLINA 28403

PARKING DECK II AND SURFACE PARKING (DESIGN-BUILD)
SOUTH CAMPUS - 4965 RIEGEL ROAD

SCO ID NUMBER: 18-19226-01A
CODE: 441828
ITEM: 301

CONTRACTOR
Balfour Beatty Construction

DESIGNER

CLARKNEXSEN
1523 ELIZABETH AVENUE, SUITE 300
CHARLOTTE, NORTH CAROLINA 28204
704·377·8800
CLARK NEXSEN LICENSE NUMBER: C-1028

CONSULTANTS

WALKER CONSULTANTS
13860 Ballantyne Corporate Place
Suite 140
Charlotte, NC 28277
T: 704.247.6230
www.walkerconsultants.com
NC License No. F-0518

McKIM&CREED
CIVIL ENGINEER
243 NORTH FRONT STREET
WILMINGTON, NORTH CAROLINA
28401
910.343.1048

CORPORATE SEAL

PROFESSIONAL SEAL
NORTH CAROLINA PROFESSIONAL ENGINEER SEAL 22905 RICHARD M COLLINSON

SUBMITTAL
04/15/2019
CONSTRUCTION DOCUMENT SUBMITTAL 01

REVISIONS

KEY PLAN

SHEET
STORM DRAINAGE DETAILS

CG501

DESIGN: TRC
DRAWN: TRC
REVIEW: RMC

8/9/2018 4:16:18 PM
S:\4899\0016\80-Drawings\CC501_4999001б.dwg

STATE OF NORTH CAROLINA DEPT. OF TRANSPORTATION DIVISION OF HIGHWAYS RALEIGH, N.C.

1-12

ENGLISH STANDARD DRAWING FOR **CONCRETE CATCH BASIN** 12" THRU 54" PIPE

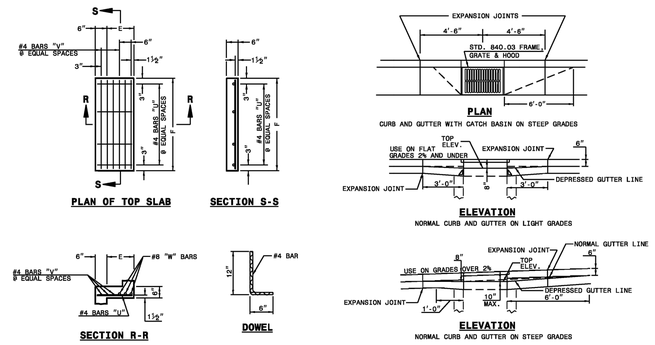

MINIMUM DIMENSIONS AND QUANTITIES FOR CONCRETE CATCH BASIN(BASED ON MIN. HEIGHT, H, WITH NO RISER) *

DIMENSIONS OF BOX AND PIPE						COVER DIMENSION		BARS-U		BARS-V		BARS-W		TOTAL LBS.	CU. YDS. CONC. IN BOX			DEDUCTIONS ONE PIPE	
PIPE D	SPAN A	WIDTH B	WIDTH C	SPAN G	MIN. HEIGHT H	E	F	NO.	LENGTH	NO.	LENGTH	NO.	LENGTH		TOP SLAB	BOTTOM SLAB	WT. CONC. IN WALL HIGH H	C.M.	R.C.
12"	3'-0"	2'-2"	--	--	2'-9"	--	--	--	--	--	--	--	--	--	0.235	0.772	0.015	0.026	
15"	3'-0"	2'-2"			3'-0"										0.235	0.829	0.023	0.036	
18"	3'-0"	2'-2"			3'-3"										0.235	0.887	0.033	0.049	
24"	3'-0"	2'-2"			3'-9"										0.235	1.001	0.059	0.085	
30"	3'-0"	2'-2"	3'-4"		4'-3"	1'-2"	4'-0"	4	1'-5"	2	3'-9"	3	3'-9"	39	0.123	0.931	1.433	0.092	0.127
36"	3'-0"	2'-2"	3'-10"		4'-9"	1'-8"	4'-0"	4	1'-11"	3	3'-9"	3	3'-9"	43	0.161	0.958	1.714	0.132	0.178
42"	3'-0"	2'-2"		4'-5"	5'-3"	1'-5"	3'-2"	4	1'-8"	2	2'-11"	3	2'-11"	32	0.112	0.318	1.738	0.180	0.243
48"	3'-0"	2'-2"		5'-0"	5'-9"	2'-0"	3'-2"	4	2'-3"	3	2'-11"	3	2'-11"	35	0.140	0.352	2.052	0.235	0.317
54"	3'-0"	2'-2"		5'-7"	6'-3"	2'-7"	3'-2"	4	2'-10"	5	2'-11"	3	2'-11"	41	0.160	0.386	2.387	0.297	0.401

* RISER HAS .228 CUBIC YAROS OF CONCRETE PER FOOT HEIGHT

SHEET 2 OF 2 — 840.02

STATE OF NORTH CAROLINA DEPT. OF TRANSPORTATION DIVISION OF HIGHWAYS RALEIGH, N.C.

1-12

ENGLISH STANDARD DRAWING FOR **CONCRETE CATCH BASIN** 12" THRU 54" PIPE

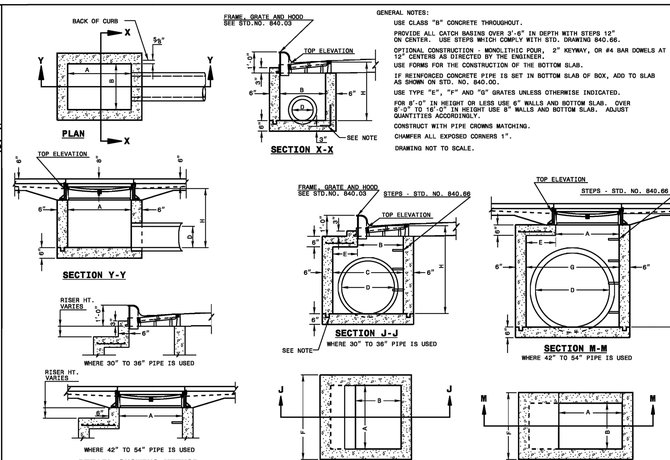

GENERAL NOTES:

USE CLASS "B" CONCRETE THROUGHOUT.

PROVIDE ALL CATCH BASINS OVER 3'-6" IN DEPTH WITH STEPS 12" ON CENTER. USE STEPS WHICH COMPLY WITH STD. DRAWING 840.66.

OPTIONAL CONSTRUCTION - MONOLITHIC FOUR, 2" KEYWAY, OR #4 BAR DOWELS AT 12" CENTERS AS DIRECTED BY THE ENGINEER.

USE FORMS FOR THE CONSTRUCTION OF THE BOTTOM SLAB.

IF REINFORCED CONCRETE PIPE IS SET IN BOTTOM SLAB OF BOX, ADD TO SLAB AS SHOWN ON STD. NO. 840.00.

USE TYPE "E", "F" AND "G" GRATES UNLESS OTHERWISE INDICATED.

FOR 5'-0" IN HEIGHT OR LESS USE 6" WALLS AND BOTTOM SLAB. OVER 5'-0" TO 16'-0" IN HEIGHT USE 8" WALLS AND BOTTOM SLAB. ADJUST QUANTITIES ACCORDINGLY.

CONSTRUCT WITH PIPE CROWNS MATCHING.

CHAMFER ALL EXPOSED CORNERS 1".

DRAWING NOT TO SCALE.

SHEET 1 OF 2 — 840.02

4 CONCRETE CATCH BASIN — NTS

STATE OF NORTH CAROLINA DEPT. OF TRANSPORTATION DIVISION OF HIGHWAYS RALEIGH, N.C.

1-12

ENGLISH STANDARD DRAWING FOR **FRAME, GRATES, AND HOOD** FOR USE ON STANDARD CATCH BASIN

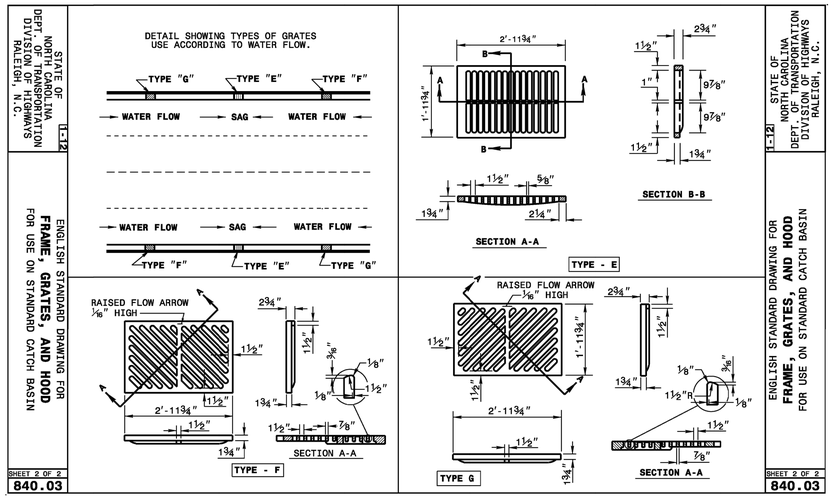

SHEET 2 OF 2 — 840.03

STATE OF NORTH CAROLINA DEPT. OF TRANSPORTATION DIVISION OF HIGHWAYS RALEIGH, N.C.

1-12

ENGLISH STANDARD DRAWING FOR **FRAME, GRATES, AND HOOD** FOR USE ON STANDARD CATCH BASIN

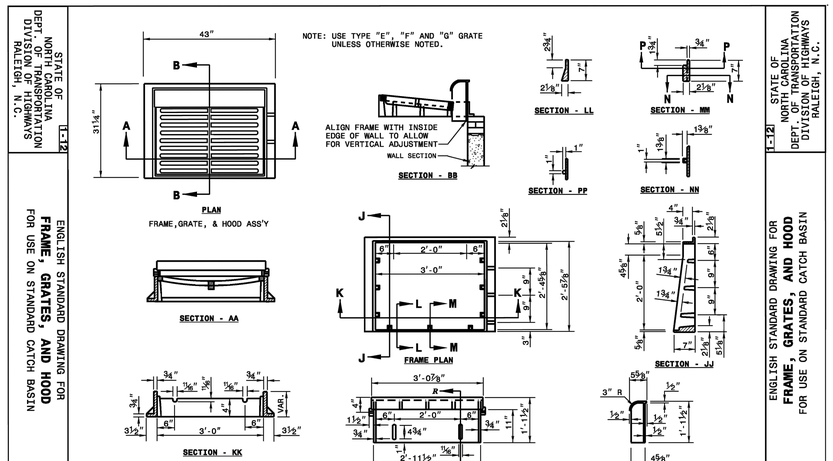

NOTE: USE TYPE "E", "F" AND "G" GRATE UNLESS OTHERWISE NOTED.

ALIGN FRAME WITH INSIDE EDGE OF WALL TO ALLOW FOR VERTICAL ADJUSTMENT

SHEET 1 OF 2 — 840.03

2 FRAME GRATES AND HOOD — NTS

STATE OF NORTH CAROLINA DEPT. OF TRANSPORTATION DIVISION OF HIGHWAYS RALEIGH, N.C.

1-12

ENGLISH STANDARD DRAWING FOR **CONCRETE DROP INLET** 12" THRU 30" PIPE

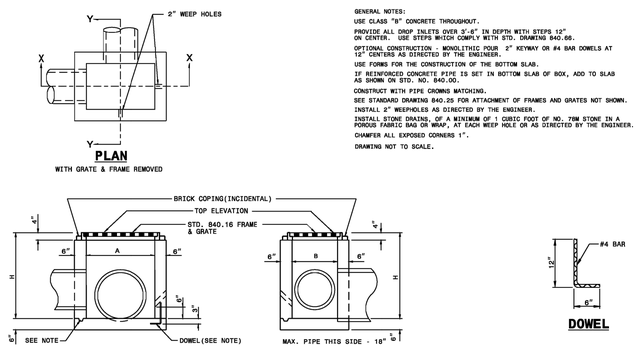

GENERAL NOTES:

USE CLASS "B" CONCRETE THROUGHOUT.

PROVIDE ALL DROP INLETS OVER 3'-6" IN DEPTH WITH STEPS 12" ON CENTER. USE STEPS WHICH COMPLY WITH STD. DRAWING 840.66.

OPTIONAL CONSTRUCTION - MONOLITHIC FOUR 2" KEYWAY OR #4 BAR DOWELS AT 12" CENTERS AS DIRECTED BY THE ENGINEER.

USE FORMS FOR THE CONSTRUCTION OF THE BOTTOM SLAB.

IF REINFORCED CONCRETE PIPE IS SET IN BOTTOM SLAB OF BOX, ADD TO SLAB AS SHOWN ON STD. NO. 840.00.

CONSTRUCT WITH PIPE CROWNS MATCHING.

SEE STANDARD DRAWING 840.25 FOR ATTACHMENT OF FRAMES AND GRATES NOT SHOWN.

INSTALL 2" WEEPHOLES AS DIRECTED BY THE ENGINEER.

INSTALL STONE DRAINS, OF A MINIMUM OF 1 CUBIC FOOT OF NO. 78M STONE IN A POROUS FABRIC BAG OR WRAP, AT EACH WEEP HOLE OR AS DIRECTED BY THE ENGINEER.

CHAMFER ALL EXPOSED CORNERS 1".

DRAWING NOT TO SCALE.

DIMENSIONS AND QUANTITIES FOR DROP INLET(BASED ON MIN. HEIGHT, H)

DIMENSIONS OF BOX & PIPE				CUBIC YARDS CONC. IN BOX			DEDUCTIONS FOR ONE PIPE	
PIPE D	SPAN A	WIDTH B	MIN. HEIGHT H	BOTTOM SLAB	WALL PER FT. HT.	TOTAL WITH MIN. HEIGHT H	C.M.	R.C.
12"	3'-0"	2'-0"	2'-0"	0.222	0.222	0.592	0.015	0.026
15"	/	/	2'-3"			0.648	0.023	0.036
18"	/	/	2'-6"			0.703	0.033	0.049
24"	/	/	3'-0"	/	/	0.814	0.059	0.085
30"	3'-0"	2'-0"	3'-6"	0.222	0.222	0.925	0.092	0.127

SHEET 1 OF 1 — 840.14

1 CONCRETE DROP INLET — NTS

STATE OF NORTH CAROLINA DEPT. OF TRANSPORTATION DIVISION OF HIGHWAYS RALEIGH, N.C.

ENGLISH STANDARD DRAWING FOR **FLARED END SECTION OUTLET**

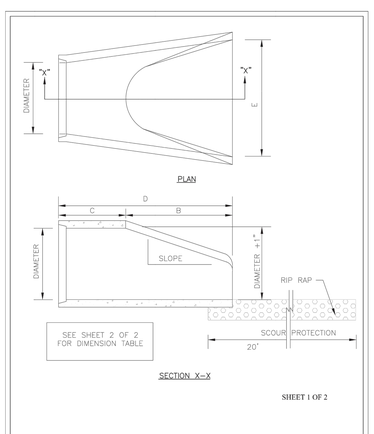

SHEET 1 OF 2

STANDARD DETAIL — FLARED END SECTION OUTLET

DATE: 2001 — DRAWN BY: JSR/CMR — CHECKED BY: B.P., P.E. — SCALE: NOT TO SCALE

CITY OF WILMINGTON ENGINEERING OFFICE 305 CHESTNUT STREET PO. BOX 1810 WILMINGTON N.C. 28402 (910) 341-7807 — SD 1-17

NOTE:

1. STRUCTURAL DESIGN OF END SECTION SHALL CONFORM WITH THAT OF STANDARD REINFORCED CONCRETE.

PIPE DIAMETER	WALL THICKNESS	SLOPE	B	C	D	E	UNIT WEIGHT
12	2 1/4	3:1	24	49	73	24	730
15	2 1/4	3:1	27	46	73	30	910
18	2 1/2	3:1	27	46	73	36	1190
21	2 3/4	3:1	36	37	73	42	1370
24	3	3:1	42	31 1/2	73 1/2	48	1770
27	3 1/4	3:1	48	25 1/2	73 1/2	54	2130
30	3 1/2	3:1	54	19 3/4	73 3/4	60	2380
33	3 3/4	3:1	60	36	96	66	3870
36	4	3:1	63	34 3/4	97 3/4	72	5320
42	4 1/2	3:1	63	35	98	78	5920
48	5	3:1	72	26	98	84	7470
54	5 1/2	2.4:1	66	34	100	90	8810
60	6	2:1	60	39	99	96	11180
72	7	2:1	78	21	99	108	13980

DIMENSIONS IN INCHES WEIGHTS IN POUNDS

SHEET 2 OF 2

STANDARD DETAIL — FLARED END SECTION OUTLET DIMENSION TABLE

DATE: 2001 — DRAWN BY: JSR/CMR — CHECKED BY: B.P., P.E. — SCALE: NOT TO SCALE

CITY OF WILMINGTON ENGINEERING OFFICE PO BOX 1810 WILMINGTON, NC 28402 (910) 341-7807 — SD 1-17

3 FLARED END SECTION — NTS

8/9/2018 4:16:18 PM
S:\4999900180\Drawings\CG501_49990016.dwg

UNCW
UNIVERSITY of NORTH CAROLINA WILMINGTON
601 S COLLEGE ROAD
WILMINGTON, NORTH CAROLINA 28403

PARKING DECK II AND SURFACE PARKING (DESIGN-BUILD)
SOUTH CAMPUS - 4965 RIEGEL ROAD

SCO ID NUMBER: 18-19226-01A
CODE: 441828
ITEM: 301

CONTRACTOR
Balfour Beatty Construction

DESIGNER

CLARKNEXSEN
1523 ELIZABETH AVENUE, SUITE 300
CHARLOTTE, NORTH CAROLINA 28204
704-377-8800
CLARK NEXSEN LICENSE NUMBER: C-1028

CONSULTANTS

WALKER CONSULTANTS
13860 Ballantyne Corporate Place
Suite 140
Charlotte, NC 28277
T: 704.247.6230
www.walkerconsultants.com
NC License No. F-0518

McKIM&CREED
CIVIL ENGINEER
243 NORTH FRONT STREET
WILMINGTON, NORTH CAROLINA
28401
910.343.1048

CORPORATE SEAL

PROFESSIONAL SEAL
NORTH CAROLINA PROFESSIONAL SEAL 22013 ENGINEER RICHARD M COLLIER

SUBMITTAL
04/15/2019
CONSTRUCTION DOCUMENT SUBMITTAL 01

REVISIONS

KEY PLAN

SHEET
STORM DRAINAGE DETAILS

CG502

DESIGN: TRC
DRAWN: TRC
REVIEW: RMC

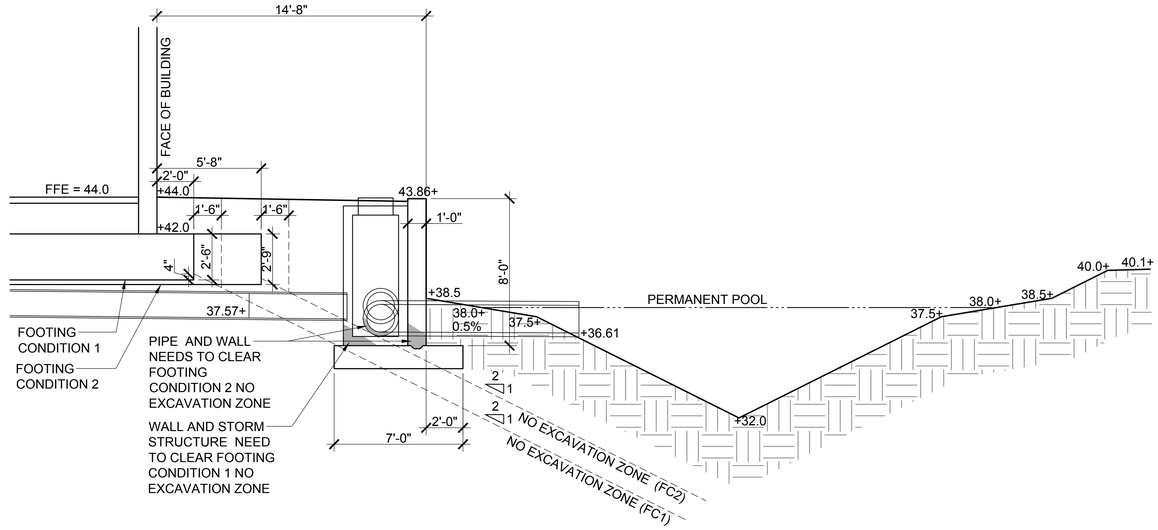

3 STORMWATER CONNECTION TO POND WITH SITE WALL NTS

NOTE:
CONTROL JOINTS SHALL BE 15' O.C. MAX., AND SHALL BE 2" IN DEPTH. EXPANSIONS JOINTS SHALL BE 45' O.C. MAX. AND SHALL EXTEND THE FULL DEPTH OF THE LEVEL SPREADER. THE MATERIAL SHALL BE PRE-MOLDED, ASPHALT IMPREGNATED, NON-EXTRUDING WITH A 1/2" THICKNESS.

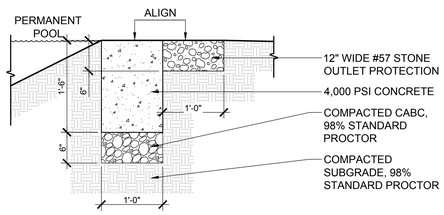

6 LEVEL SPREADER NTS

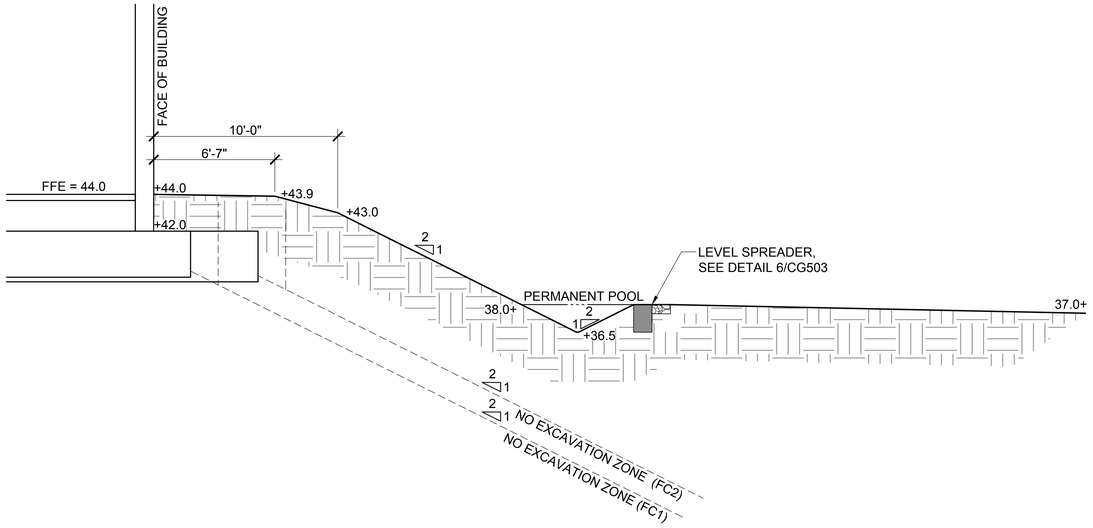

2 BLIND SWALE WITH LEVEL SPREADER OUTLET NTS

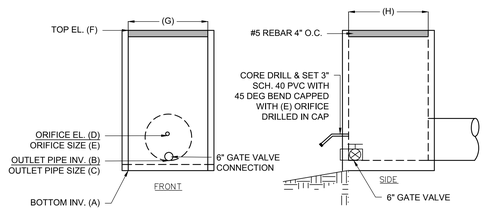

WET POND OUTLET STRUCTURE	
	WET POND 1
A	36.9 (EL. FT)
B	37.5 (EL. FT)
C	15 (IN)
D	38 (EL. FT)
E	1.25 (IN)
F	39.3 (EL. FT)
G	4.0 (FT)
H	4.0 (FT)

5 WET POND OUTLET STRUCTURE NTS

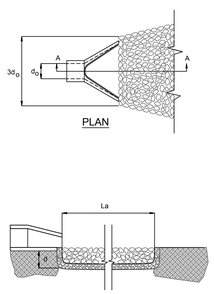

NOTES:
1. La IS THE LENGTH OF THE RIPRAP APRON.
2. d = 1.5 TIMES THE MAXIMUM STONE DIAMETER BUT NOT LESS THAN 6".
3. IN A WELL - DEFINED CHANNEL EXTEND THE APRONUP THE CHANNEL BANKS TO AN ELEVATION OF 6" ABOVE THE MAXIMUM TAILWATER DEPTH OR TO THE TOP OF THE BANK, WHICHEVER IS LESS.
4. A FILTER BLANKET OR FILTER FABRIC SHOULD BE INSTALLED BETWEEN THE RIPRAP AND SOIL FOUNDATION.

OUTLET PROTECTION	
OUTLET PIPE DIA.	24"
OUTLET FLOW RATE	3.80 CFS
OUTLET VELOCITY	5.22 FT/S
MATERIAL	CLASS A
LENGTH	8'
WIDTH	6'
STONE DIA.	3"
THICKNESS	9"

4 PIPE OUTLET PROTECTION NTS

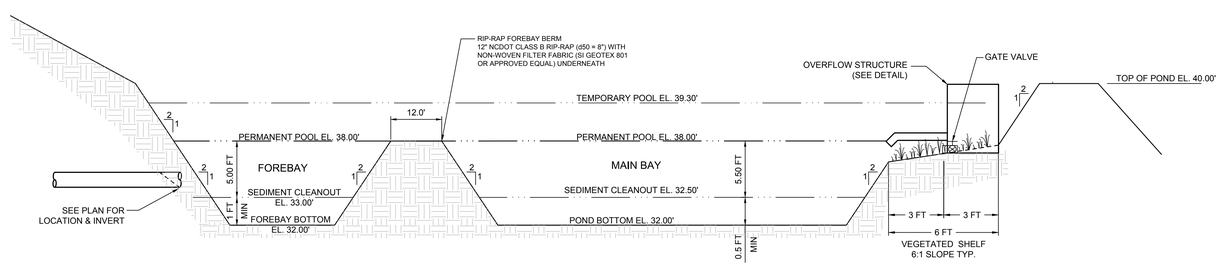

1 FOREBAY AND STORAGE POND SECTION NTS

UNCW
UNIVERSITY of NORTH CAROLINA WILMINGTON
601 S COLLEGE ROAD
WILMINGTON, NORTH CAROLINA 28403

PARKING DECK II AND SURFACE PARKING (DESIGN-BUILD)
SOUTH CAMPUS - 4965 RIEGEL ROAD

SCO ID NUMBER: 18-19226-01A
CODE: 441828
ITEM: 301

CONTRACTOR
Balfour Beatty Construction

DESIGNER

CLARKNEXSEN
1523 ELIZABETH AVENUE, SUITE 300
CHARLOTTE, NORTH CAROLINA 28204
704·377·8800
CLARK NEXSEN LICENSE NUMBER: C-1028

CONSULTANTS

WALKER CONSULTANTS
13860 Ballantyne Corporate Place
Suite 140
Charlotte, NC 28277
T: 704.247.6230
www.walkerconsultants.com
NC License No. F-0518

McKIM&CREED
CIVIL ENGINEER
243 NORTH FRONT STREET
WILMINGTON, NORTH CAROLINA
28401
910.343.1048

CORPORATE SEAL

PROFESSIONAL SEAL
NOT FOR CONSTRUCTION
NORTH CAROLINA PROFESSIONAL SEAL 22913 ENGINEER RICHARD M. COLLISON

SUBMITTAL
04/15/2019
CONSTRUCTION DOCUMENT SUBMITTAL 01

REVISIONS

KEY PLAN

SHEET
STORM DRAINAGE DETAILS

CG503

DESIGN: TRC
DRAWN: TRC
REVIEW: RMC

8/9/2018 4:16:18 PM
S:\49990016\90-Drawings\CG501_49990016.dwg

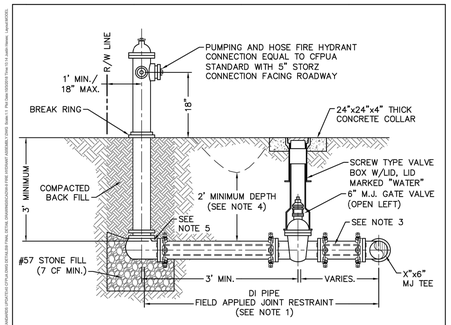

NOTES
1. JOINT RESTRAINT SYSTEMS SHALL BE WEDGE ACTION STYLE FOR DI.
2. WHEN HYDRANT LEGS REQUIRE FULL LENGTH PIPE SECTIONS, OVER BELL RESTRAINT SYSTEM SHALL HAVE 316 STAINLESS STEEL HARNESS AND FASTENERS.
3. CONTINUOUS 316 STAINLESS STEEL RODS (TEE TO VALVE AND VALVE TO HYDRANT) MAY BE USED WITH COR-BLUE MJ T-BOLT AND GASKET KITS, AS AN ALTERNATIVE.
4. HYDRANT AND VALVE SHALL BE PLACED OUTSIDE DITCH LIMITS.
5. WEEP HOLES OPEN AND UNBLOCKED TO DRAIN.
6. MJ TEE SHALL BE RESTRAINED ON EACH SIDE OF MAIN PLUS MAIN VALVES, FITTING, OR JOINTS WITHIN 10-FEET OF MJ TEE.
7. TRACING WIRE SHALL EXTEND ALONG HYDRANT LATERAL AND UP TO FINISHED GRADE WITH 2-FEET EXTENDED ABOVE THE BREAK RING OF HYDRANT.

DETAIL: FIRE HYDRANT ASSEMBLY	CAPE FEAR PUBLIC UTILITY AUTHORITY 235 GOVERNMENT CENTER DRIVE WILMINGTON, NC 28403 OFFICE: (910)332-6560	DETAIL NO: W-9
SCALE: NOT TO SCALE / CFPUA DETAIL DATE: 01/01/19	Stewardship. Sustainability. Service.	SHEET NO: -
CFPUA REV. No: 1		

6 FIRE HYDRANT ASSEMBLY NTS

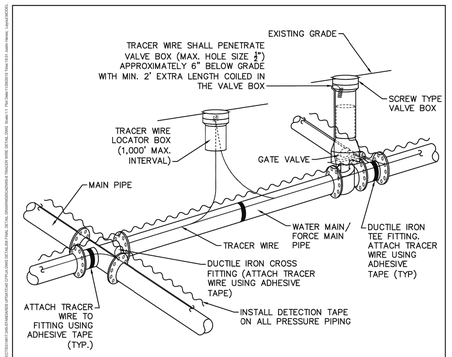

NOTES:
1. TRACER WIRE SHALL BE #10 COPPER SOLID CORE COPPER WIRE WITH GAS AND OIL RESISTANT INSULATION AND DIRECT BURY RATING.
2. WIRE SHALL BE STRAPPED TO ALL PVC PIPING WITH ADHESIVE TAPE AT 12 FOOT INTERVALS.
3. SECURE WIRE TO ALL TEE AND CROSS FITTINGS WITH ADHESIVE TAPE.
4. ALL SPLICES IN THE WIRE SHALL BE MADE WITH 3M DBR DIRECT BURY SPLICE KITS.

DETAIL: TRACER WIRE DETAIL	CAPE FEAR PUBLIC UTILITY AUTHORITY 235 GOVERNMENT CENTER DRIVE WILMINGTON, NC 28403 OFFICE: (910)332-6560	DETAIL NO: WS-6
SCALE: NOT TO SCALE / CFPUA DETAIL DATE: 01/01/19	Stewardship. Sustainability. Service.	SHEET NO: -
CFPUA REV. No: 1		

4 TRACER WIRE DETAIL NTS

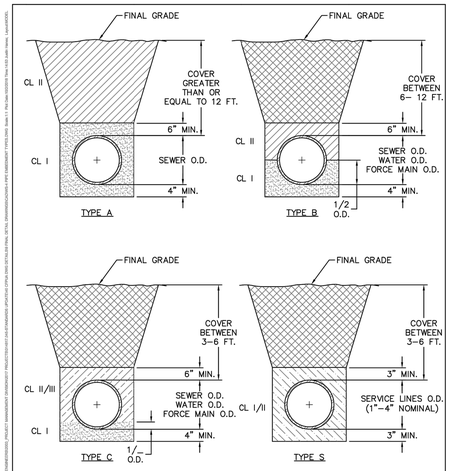

COMPACTION NOTES:
1. ALL ZONES: 95% STD EFFORT PER ASTM D698, EXCEPT AS STATED IN COMPACTION NOTE 2.
2. 12" SUBGRADE UNDER PAVEMENT: 98% STD EFFORT PER ASTM D698.

DETAIL: PIPE EMBEDMENT TYPES	CAPE FEAR PUBLIC UTILITY AUTHORITY 235 GOVERNMENT CENTER DRIVE WILMINGTON, NC 28403 OFFICE: (910)332-6560	DETAIL NO: WS-4
SCALE: NOT TO SCALE / CFPUA DETAIL DATE: 01/01/19	Stewardship. Sustainability. Service.	SHEET NO: -
CFPUA REV. No: 1		

2 PIPE EMBEDMENT TYPES NTS

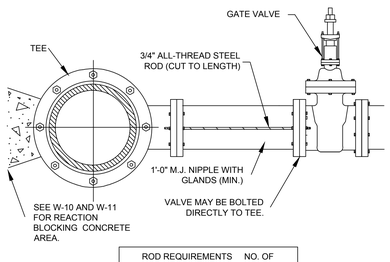

ROD REQUIREMENTS	NO. OF
RODS	BRANCH SIZE
4"	2
6"	2
8"	4
12"	4
16"	6
24"	6
30"	8
36"	8

NOTES: 1. STEEL RODS AND BOLTS SHALL BE 3/4" HOT DIPPED GALVANIZED. 2. SEE STANDARD THRUST BLOCK. TABLES W-10 AND W-11 FOR CONCRETE. 3. CONCRETE SHALL NOT CONTACT BOLTS OR ENDS OF MECHANICAL FITTINGS. 4. THIS RODDING REQUIREMENT DOES NOT APPLY TO FIRE HYDRANTS.

7 VALVE RESTRAINT AT TEES AND CROSSES FOR LINES (4"-24") NTS

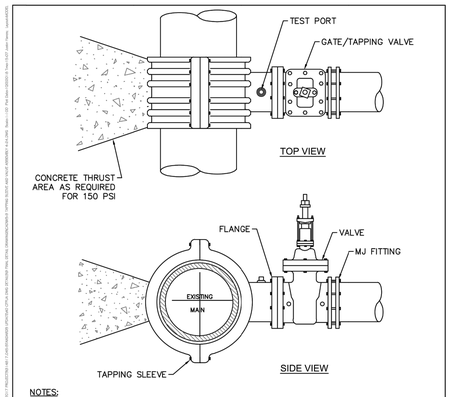

NOTES:
1. CONCRETE SHALL NOT CONTACT BOLTS OR ENDS OF MECHANICAL JOINT FITTINGS.
2. TEST PRESSURE SHALL NOT BE APPLIED FOR A MINIMUM OF 7 DAYS AFTER THRUST BLOCK PLACEMENT.
3. BRANCH SHALL NOT EQUAL RUN DIAMETER UNLESS APPROVED BY CFPUA ENGINEERING.
4. TAPPING SLEEVE & VALVE TO BE HYDROSTATICALLY TESTED AT 150 PSI FOR 15 MINUTES WITH ZERO PRESSURE LOSS.

DETAIL: TAPPING SLEEVE AND VALVE ASSEMBLY (4"-24")	CAPE FEAR PUBLIC UTILITY AUTHORITY 235 GOVERNMENT CENTER DRIVE WILMINGTON, NC 28403 OFFICE: (910)332-6560	DETAIL NO: WS-9
SCALE: NOT TO SCALE / CFPUA DETAIL DATE: 01/01/19	Stewardship. Sustainability. Service.	SHEET NO: -
CFPUA REV. No: 1		

5 TAPPING SLEEVE AND VALVE ASSEMBLY (4"-24") NTS

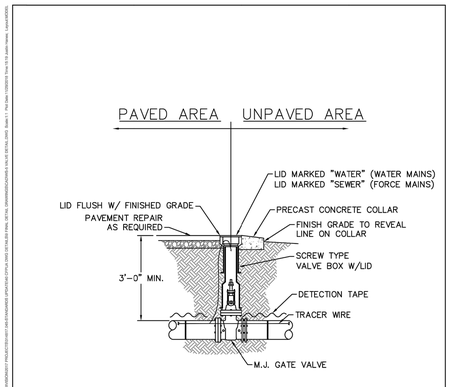

NOTES:
1. TRACER WIRE SHALL PENETRATE VALVE BOX THROUGH DRILLED HOLE APPROX. 6" BELOW GRADE WITH MINIMUM 2-FEET EXTRA LENGTH COILED IN THE VALVE BOX. SEE WS-6.

DETAIL: VALVE DETAIL	CAPE FEAR PUBLIC UTILITY AUTHORITY 235 GOVERNMENT CENTER DRIVE WILMINGTON, NC 28403 OFFICE: (910)332-6560	DETAIL NO: WS-5
SCALE: NOT TO SCALE / CFPUA DETAIL DATE: 01/01/19	Stewardship. Sustainability. Service.	SHEET NO: -
CFPUA REV. No: 1		

3 VALVE DETAIL NTS

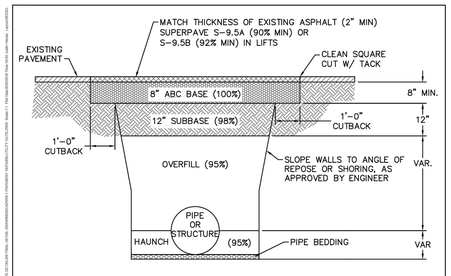

NOTES:
1. CONTRACTOR SHALL ENSURE BOTTOM OF TRENCH IS SUITABLE FOR INSTALLATION AND DOES NOT REQUIRE FOUNDATION CONDITIONING STONE.
2. FILL SHALL BE SUITABLE MATERIAL THAT IS FREE FROM HEAVY CLAY, GUMBOS, DEBRIS, ORGANICS AND LITTLE TO NO EXCESSIVE MOISTURE.
3. SELECT BACKFILL MAY BE SUBSTITUTED OR REQUIRED BY CITY TO ACHIEVE COMPACTION, (I.E. #57 STONE, ABC, CRUSHED LIMESTONE, CLEAN SAND, FLOWABLE FILL, ETC).
4. SOIL SHALL BE INSTALLED IN 6"-8" LIFTS AND COMPACTED BY A MECHANIZED TAMPER (I.E. JUMPING JACK). HOWEVER, VIBRATORY ROLLERS > 18" WIDTH MAY BE USED FOR LARGER EXCAVATIONS. THE PLATE TAMP METHOD SHALL NOT BE USED.
5. ALL APPROVED CASTINGS SHALL BE SET FLUSH TO GRADE AND SUPPORTED IF APPLICABLE.
6. COMPACT MATERIALS TO MINIMUM % DENSITY SHOWN IN DIAGRAM AS DETERMINED BY THE STANDARD PROCTOR METHOD ASTM D-698-A FOR SOILS, AND ASTM D-698-C FOR ABC STONE, AND BY NUCLEAR GAGE OR CORE SAMPLE FOR ASPHALT.
7. CUTBACKS OF ASPHALT SHALL BE PREPARED ON EDGE OF EXCAVATION OVER TOP OF UNDISTURBED SOIL.

(FOR PRIVATE ROADS AND PAVED AREAS; CONTRACTOR TO MEET MINIMUM REQUIREMENTS AS DEFINED BY RIGHT-OF-WAY OWNER FOR PUBLIC ROAD REPAIRS)

DETAIL: CITY OF WILMINGTON PAVEMENT REPAIRS-UTILITY CUTS	CAPE FEAR PUBLIC UTILITY AUTHORITY 235 GOVERNMENT CENTER DRIVE WILMINGTON, NC 28403 OFFICE: (910)332-6560	DETAIL NO: WS-1
SCALE: NOT TO SCALE / CFPUA DETAIL DATE: 01/01/19	Stewardship. Sustainability. Service.	SHEET NO: -
CFPUA REV. No: 1		

1 PAVEMENT REPAIRS-UTILITY CUTS NTS

UNCW
UNIVERSITY of NORTH CAROLINA WILMINGTON
601 S COLLEGE ROAD
WILMINGTON, NORTH CAROLINA 28403

PARKING DECK II AND SURFACE PARKING (DESIGN-BUILD)
SOUTH CAMPUS - 4965 RIEGEL ROAD

SCO ID NUMBER: 18-19226-01A
CODE: 441828
ITEM: 301

CONTRACTOR
Balfour Beatty Construction

DESIGNER

CLARKNEXSEN
1523 ELIZABETH AVENUE, SUITE 300
CHARLOTTE, NORTH CAROLINA 28204
704·377·8800
CLARK NEXSEN LICENSE NUMBER: C-1028

CONSULTANTS

WALKER CONSULTANTS
13860 Ballantyne Corporate Place
Suite 140
Charlotte, NC 28277
T: 704.247.6230
www.walkerconsultants.com
NC License No. F-0518

McKIM&CREED
CIVIL ENGINEER
243 NORTH FRONT STREET
WILMINGTON, NORTH CAROLINA
28401
910.343.1048

CORPORATE SEAL

PROFESSIONAL SEAL
NOT FOR CONSTRUCTION
NORTH CAROLINA PROFESSIONAL SEAL 22210 ENGINEER RICHARD M. COLLINS
04/15/2019

SUBMITTAL
CONSTRUCTION DOCUMENT SUBMITTAL 01

REVISIONS

KEY PLAN

SHEET
PUBLIC WATER DETAILS

CU501

DESIGN: TRC
DRAWN: TRC
REVIEW: RMC

8/9/2018 4:16:18 PM
S:\49990016\80\Drawings\CU501_49990016.dwg

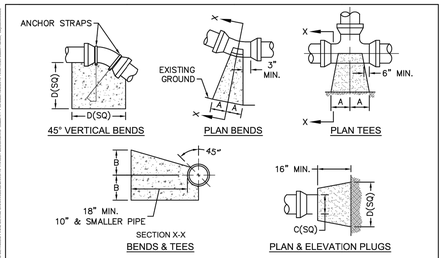

SIZE	90 BENDS A	90 BENDS B	45 BENDS A	45 BENDS B	22-1/2 BENDS A	22-1/2 BENDS B	TEES/PLUGS A	TEES/PLUGS B	45 VERT. BENDS
3"	8"	6"	5"	6"	3"	7"	6"	8"	27"
4"	8"	9"	5"	8"	3"	11"	6"	9"	28"
6"	14"	11"	9"	9"	8"	8"	12"	9"	36"
8"	16"	16"	12"	12"	10"	13"	14"	13"	42"
10"	18"	22"	15"	14"	14"	16"	18"	15"	50"
12"	20"	28"	18"	17"	16"	16"	22"	18"	62"
14"	26"	29"	21"	19"	18"	18"	26"	20"	72"
16"	33"	29"	25"	21"	20"	21"	32"	21"	83"
18"	40"	30"	28"	24"	22"	23"	36"	24"	88"

NOTES:
1. THRUST BLOCKING IS NOT PERMITTED EXCEPT IN SPECIAL INSTALLATIONS WHERE DESIGNED BY ENGINEER AND APPROVED BY CFPUA.
2. ALLOW 7-DAY MINIMUM CONCRETE CURE TIME BEFORE PLACING LOAD ON THRUST BLOCK
3. BASED ON 160 PSI TEST PRESSURE AND 2,000 PSF SOIL BEARING CAPACITY.
4. ALL BEARING SURFACES TO BE CARRIED TO UNDISTURBED GROUND.
5. PIPE & FITTINGS TO BE WRAPPED IN 10 MIL PLASTIC PRIOR TO THRUST BLOCK BEING POURED.

DETAIL: THRUST BLOCK
SCALE: NOT TO SCALE | CFPUA DETAIL DATE: 01/01/19
CFPUA REV. No: 1
CAPE FEAR PUBLIC UTILITY AUTHORITY
235 GOVERNMENT CENTER DRIVE
WILMINGTON, NC 28403
OFFICE: (910)332-6560
Stewardship. Sustainability. Service.
DETAIL NO: WS-13
SHEET NO: -

2 THRUST BLOCK NTS

CAPE FEAR PUBLIC UTILITY AUTHORITY STANDARD NOTES:

1. ALL PROPOSED ADDITIONS TO THE CAPE FEAR PUBLIC UTILITY AUTHORITY (CFPUA) WATER DISTRIBUTION AND SANITARY SEWER COLLECTION SYSTEMS, AS SHOWN AND SPECIFIED HEREIN, SHALL BE DESIGNED AND CONSTRUCTED TO CONFORM TO STATE RULES AND THE CFPUA'S MINIMUM TECHNICAL STANDARDS. THE CFPUA MINIMUM TECHNICAL STANDARDS ARE CONTAINED IN THE CURRENT DESIGN GUIDANCE MANUAL, MATERIAL SPECIFICATION MANUAL, TECHNICAL SPECIFICATIONS FOR CONSTRUCTION, AND STANDARD DRAWING DETAILS.
2. SEWER GUARDS REQUIRED AT ALL MANHOLES. STAINLESS STEEL SEWER GUARDS REQUIRED AT MANHOLES LOCATED IN TRAFFIC AREAS.
3. WATER AND SEWER SERVICES SHALL BE PERPENDICULAR TO MAIN AND TERMINATE 18" INSIDE RIGHT-OF-WAY LINE. SEWER SERVICES IN CUL-DE-SACS ARE REQUIRED TO BE PERPENDICULAR, OR MUST ORIGINATE IN END OF LINE MANHOLE AND TERMINATE 18" INSIDE RIGHT-OF-WAY LINE.
4. ALL SEWER SERVICES CONNECTING INTO DUCTILE IRON MAINS SHALL ALSO BE CONSTRUCTED OF DIP.
5. MINIMUM 10' UTILITIES EASEMENT PROVIDED ALONG THE FRONTAGE OF ALL LOTS AND AS SHOWN FOR NEW DEVELOPMENTS.
6. NO FLEXIBLE COUPLINGS SHALL BE USED.
7. ALL STAINLESS STEEL FASTENERS SHALL BE TYPE 316.
8. CLEANOUTS SHALL BE LOCATED A MINIMUM OF 12 FEET FROM ALL PROPERTY CORNERS.
9. WATER METER BOXES ARE TO BE A MINIMUM OF 5 FEET FROM THE PROPERTY CORNER.
10. UNUSED SERVICES SHALL BE ABANDONED. ABANDONED WATER SERVICES SHALL BE DISCONNECTED FROM MAIN.
11. A MINIMUM OF 10' OF MAIN LINE SHALL BE REPLACED FOR NEW CONNECTIONS TO EXISTING CLAY GRAVITY SEWER MAINS.

DETAIL: STANDARD NOTES (REQUIRED ON ALL PLAN AND PROFILE SHEETS)
SCALE: NOT TO SCALE | CFPUA DETAIL DATE: 01/02/19
CFPUA REV. No: 2
CAPE FEAR PUBLIC UTILITY AUTHORITY
235 GOVERNMENT CENTER DRIVE
WILMINGTON, NC 28403
OFFICE: (910)332-6560
Stewardship. Sustainability. Service.
DETAIL NO: WS-14
SHEET NO: -

3 STANDARD NOTES NTS

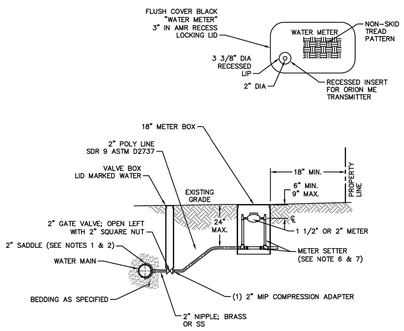

NOTES:
1. WATER SERVICES SHALL BE INSTALLED PERPENDICULAR TO MAIN AND TERMINATE 18" INSIDE THE RIGHT-OF-WAY LINE.
2. SERVICE SADDLES ON PVC MAINS SHALL BE WIDE BAND BRASS BODY.
3. METER BOXES SUSCEPTIBLE TO TRAFFIC SHALL CONFORM TO ASTM A48, CLASS 30B AND AASHTO H20 LOAD RATING STANDARDS.
4. NON-TRAFFIC METER BOXES SHALL BE PER CFPUA STANDARD MATERIAL.
5. 3" CLEAN FILL REQUIRED ALL AROUND 2" POLY SERVICE LINE.
6. 1 1/2" METER - NL METER SETTER SHALL BE PER CFPUA STANDARD MATERIAL.
7. 2" METER - NL METER SETTER SHALL BE PER CFPUA STANDARD MATERIAL.
8. WATER METER BOXES ARE TO BE A MINIMUM OF 5 FEET FROM THE PROPERTY CORNERS.
9. SERVICE PIPING AND METER SETTER TO BE CENTERED IN THE METER BOX.

DETAIL: COMMERCIAL WATER SERVICE - 1 1/2 OR 2-INCH METERS
SCALE: NOT TO SCALE | CFPUA DETAIL DATE: 01/01/19
CFPUA REV. No: 1
CAPE FEAR PUBLIC UTILITY AUTHORITY
235 GOVERNMENT CENTER DRIVE
WILMINGTON, NC 28403
OFFICE: (910)332-6560
Stewardship. Sustainability. Service.
DETAIL NO: W-3
SHEET NO: -

1 COMMERCIAL WATER SERVICE- 1 1/2 OR 2-INCH METERS NTS

UNIVERSITY of NORTH CAROLINA WILMINGTON
601 S COLLEGE ROAD
WILMINGTON, NORTH CAROLINA 28403

PARKING DECK II AND SURFACE PARKING (DESIGN-BUILD)
SOUTH CAMPUS - 4965 RIEGEL ROAD

SCO ID NUMBER: 18-19226-01A
CODE: 441828
ITEM: 301

CONTRACTOR
Balfour Beatty Construction

DESIGNER

CLARKNEXSEN
1523 ELIZABETH AVENUE, SUITE 300
CHARLOTTE, NORTH CAROLINA 28204
704·377·8800
CLARK NEXSEN LICENSE NUMBER: C-1028

CONSULTANTS

WALKER CONSULTANTS
13860 Ballantyne Corporate Place
Suite 140
Charlotte, NC 28277
T: 704.247.6230
www.walkerconsultants.com
NC License No. F-0518

McKIM&CREED
CIVIL ENGINEER
243 NORTH FRONT STREET
WILMINGTON, NORTH CAROLINA
28401
910.343.1048

CORPORATE SEAL

PROFESSIONAL SEAL
NORTH CAROLINA PROFESSIONAL SEAL 22931 ENGINEER RICHARD M COLLINSON

SUBMITTAL
04/15/2019
CONSTRUCTION DOCUMENT SUBMITTAL 01

REVISIONS

KEY PLAN

SHEET
PUBLIC WATER DETAILS

CU502

DESIGN: TRC
DRAWN: TRC
REVIEW: RMC

8/9/2018 4:16:18 PM
S:\499\001618\0-Drawings\CU501_49990016.dwg

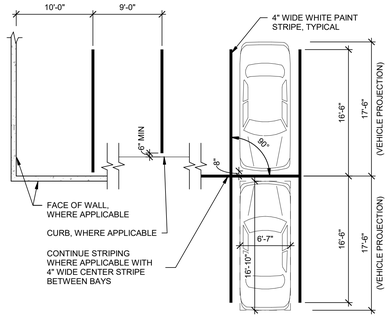

5 90° STRIPING DETAIL
1/8" = 1'-0"

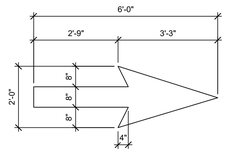

NOTE: PAINT ARROWS SOLID YELLOW, UNLESS NOTED OTHERWISE.

4 TYPICAL ARROW DETAIL
1/2" = 1'-0"

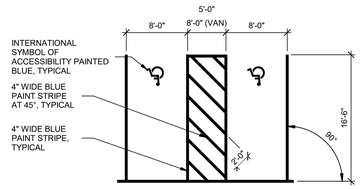

3 90° STRIPING DETAIL
1/8" = 1'-0"

A-PARKING SCHEDULE - OVERALL				
TIER	STANDARD	ACCESSIBLE CAR	ACCESSIBLE VAN	TOTAL
	0	0	0	0
LEVEL 1	144	5	4	153
LEVEL 2	206	4	0	210
LEVEL 3	206	4	0	210
LEVEL 4	206	4	0	210
LEVEL 5	203	0	0	203
	965	17	4	986

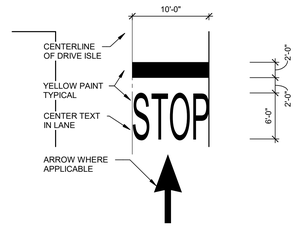

2 STOP LINE
1/8" = 1'-0"

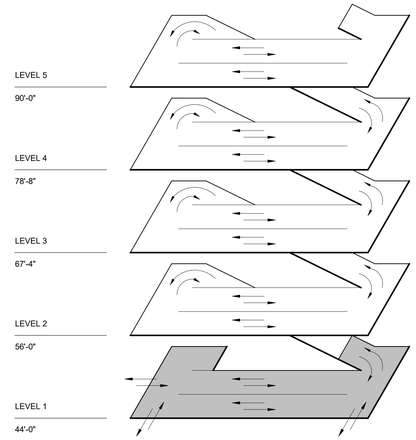

ISOMETRIC

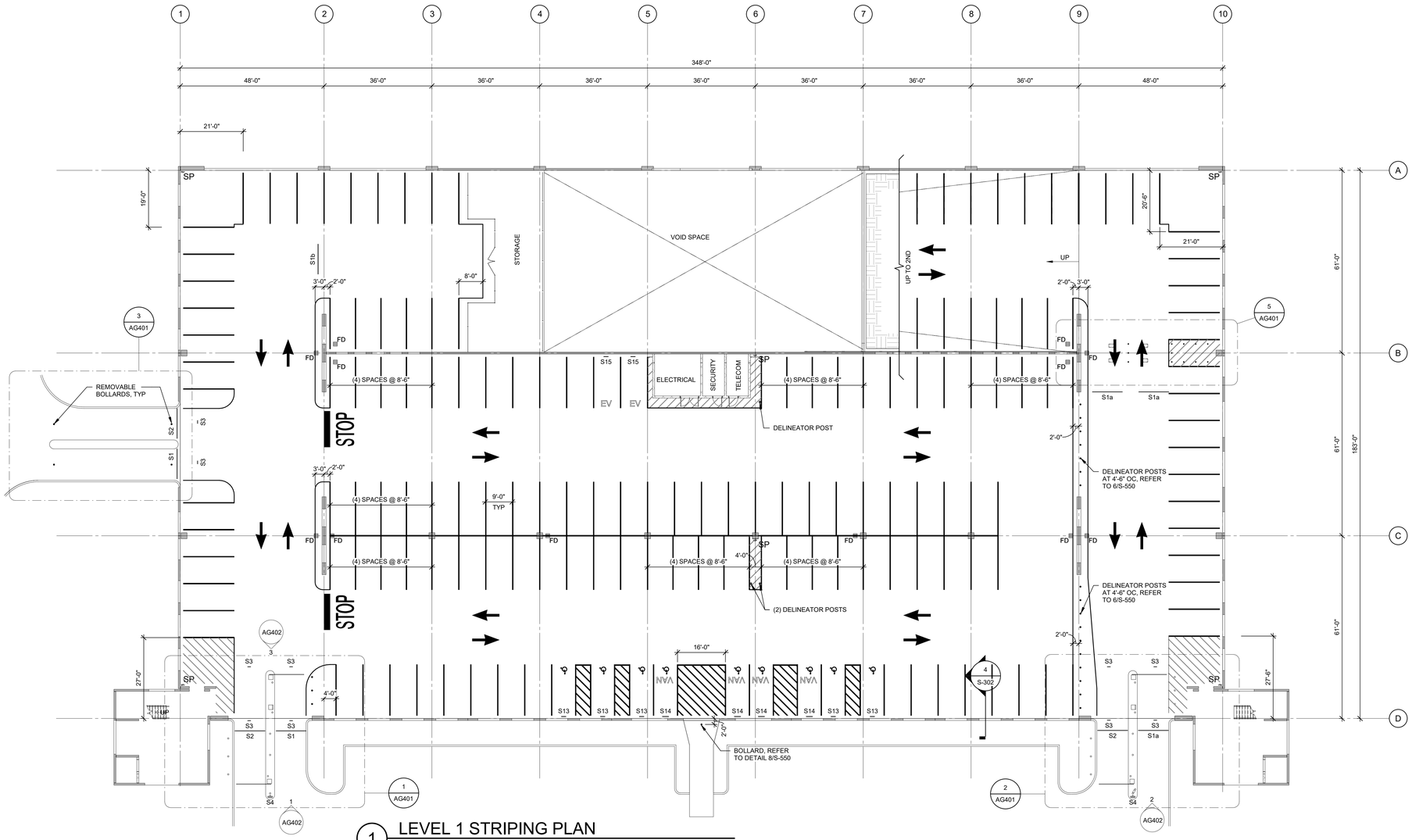

1 LEVEL 1 STRIPING PLAN
1/16" = 1'-0"

NOTE:
FOR SIGN SCHEDULE, NOTES, AND MOUNTING DETAILS, SEE AG600 SERIES SHEETS

SIGN KEY

SHEET NOTES

1. FOR TYPICAL STRIPING DETAILS AND FLOOR ARROWS SEE THIS SHEET AND SHEET AG102.
2. ALL DIMENSIONS FOR STRIPING ARE FROM FACE OF COLUMN OR INSIDE FACE OF WALL, UNO.
3. FOR FLOOR ELEVATIONS SEE "S-100" SERIES DRAWINGS.
4. FOR ENLARGED STAIR / ELEVATOR PLANS & ELEVATIONS SEE "S-400 & A-400" SERIES DRAWINGS.
5. FOR BUILDING ELEVATIONS SEE "A-200" SERIES DRAWINGS.
6. REFER TO ARCHITECTURAL SHEET AE601 FOR ADDITIONAL SIGNAGE

GENERAL PARKING STRIPING COLORS:

1. WHITE
   A. PARKING SPACE STRIPE
2. YELLOW
   A. NON-PARKING DIAGONAL CROSS HATCHING
   B. DIRECTIONAL ARROWS
   C. STOP BAR
   D. DRIVE AISLE LINE AT SHEAR WALLS
   E. CURBS
3. BLUE
   A. ADA SPACE STRIPES AND ACCESS AISLES
4. RED
   A. STANDPIPE ACCESS AISLES.

UNCW
UNIVERSITY of NORTH CAROLINA WILMINGTON
601 S COLLEGE ROAD
WILMINGTON, NORTH CAROLINA 28403

PARKING DECK II AND SURFACE PARKING (DESIGN-BUILD)
SOUTH CAMPUS - 4965 RIEGEL ROAD

SCO ID NUMBER: 18-19226-01A
CODE: 41828
ITEM: 301

CONTRACTOR
Balfour Beatty Construction

DESIGNER
CLARKNEXSEN
1523 ELIZABETH AVENUE, SUITE 300
CHARLOTTE, NORTH CAROLINA 28204
704.377.8800
CLARK NEXSEN LICENSE NUMBER: C-1028

WALKER CONSULTANTS
13860 Ballantyne Corporate Place
Suite 140
Charlotte, NC 28277
T: 704.247.6230
www.walkerconsultants.com
NC License No. F-0518

McKIM&CREED
CIVIL ENGINEER
243 NORTH FRONT STREET
WILMINGTON, NORTH CAROLINA
28401
910.343.1048

PROFESSIONAL SEAL
NOT FOR CONSTRUCTION
NORTH CAROLINA PROFESSIONAL SEAL 028007 ENGINEER JOEY D. ROWLAND

SUBMITTAL
04/15/2019
CONSTRUCTION DOCUMENT SUBMITTAL 01

REVISIONS

KEY PLAN

SHEET
LEVEL 1 STRIPING PLAN

AG101

DESIGN: Designer
DRAWN: Author
REVIEW: Checker

CN PROJECT NUMBER

4/15/2019 5:34:22 PM
C:\Revit Projects\UNC Wilmington Deck II_r17_roy.grantham.rvt

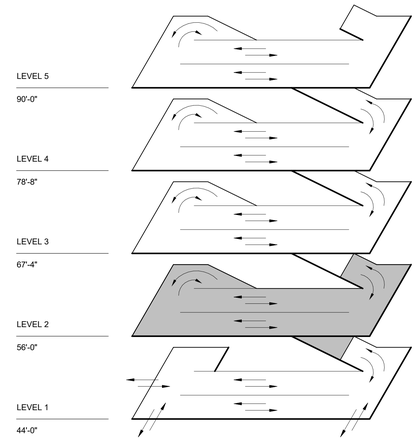

ISOMETRIC

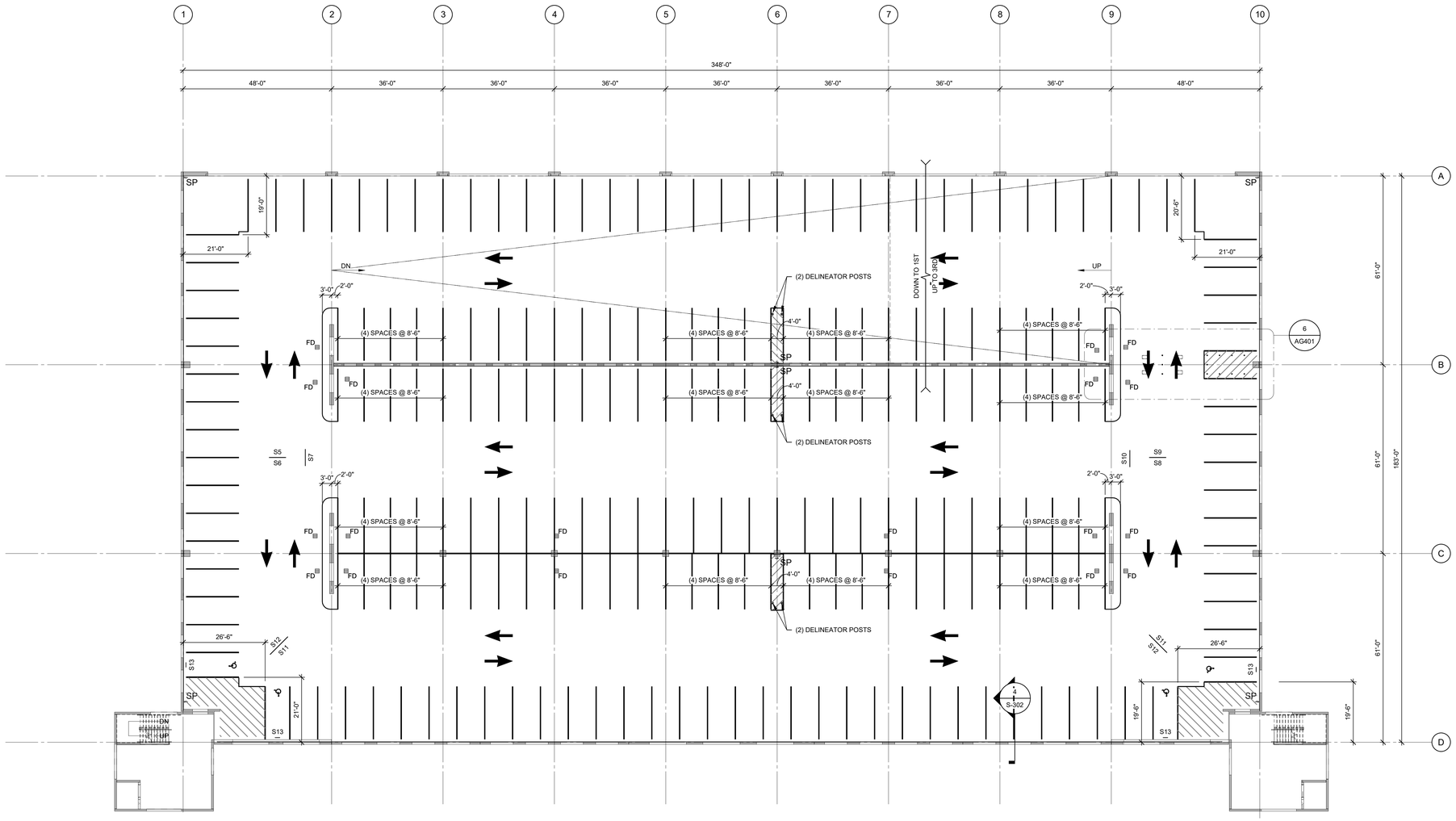

1 LEVEL 2 STRIPING PLAN

1/16" = 1'-0"

SHEET NOTES

1. REFER TO SHEET AG101 FOR GENERAL NOTES.

UNCW

UNIVERSITY of NORTH CAROLINA WILMINGTON
601 S COLLEGE ROAD
WILMINGTON, NORTH CAROLINA 28403

PARKING DECK II AND SURFACE PARKING (DESIGN-BUILD)
SOUTH CAMPUS - 4965 RIEGEL ROAD

SCO ID NUMBER: 18-19226-01A
CODE: 41828
ITEM: 301

CONTRACTOR
Balfour Beatty Construction

DESIGNER
CLARKNEXSEN
1523 ELIZABETH AVENUE, SUITE 300
CHARLOTTE, NORTH CAROLINA 28204
704.377.8800

CLARK NEXSEN LICENSE NUMBER: C-1028

WALKER CONSULTANTS
13860 Ballantyne Corporate Place
Suite 140
Charlotte, NC 28277
T: 704.247.6230
www.walkerconsultants.com
NC License No. F-0518

McKIM&CREED
CIVIL ENGINEER
243 NORTH FRONT STREET
WILMINGTON, NORTH CAROLINA
28401
910.343.1048

PROFESSIONAL SEAL
NOT FOR CONSTRUCTION
NORTH CAROLINA PROFESSIONAL SEAL 028007 ENGINEER JOEY D. ROWLAND

SUBMITTAL
04/15/2019
CONSTRUCTION DOCUMENT SUBMITTAL 01

REVISIONS

KEY PLAN

SHEET
LEVEL 2 STRIPING PLAN

AG102

DESIGN: Designer
DRAWN: Author
REVIEW: Checker

CN PROJECT NUMBER

4/15/2019 5:34:24 PM
C:\Revit Projects\UNC Wilmington Deck II_r17_ory.grantham.rvt

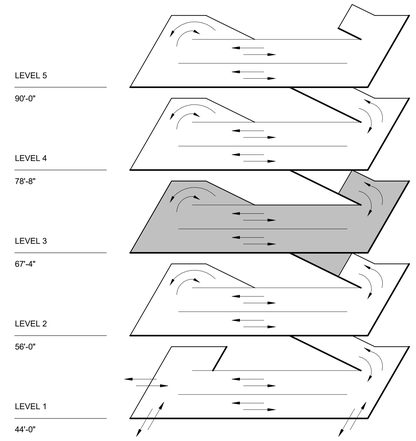

ISOMETRIC

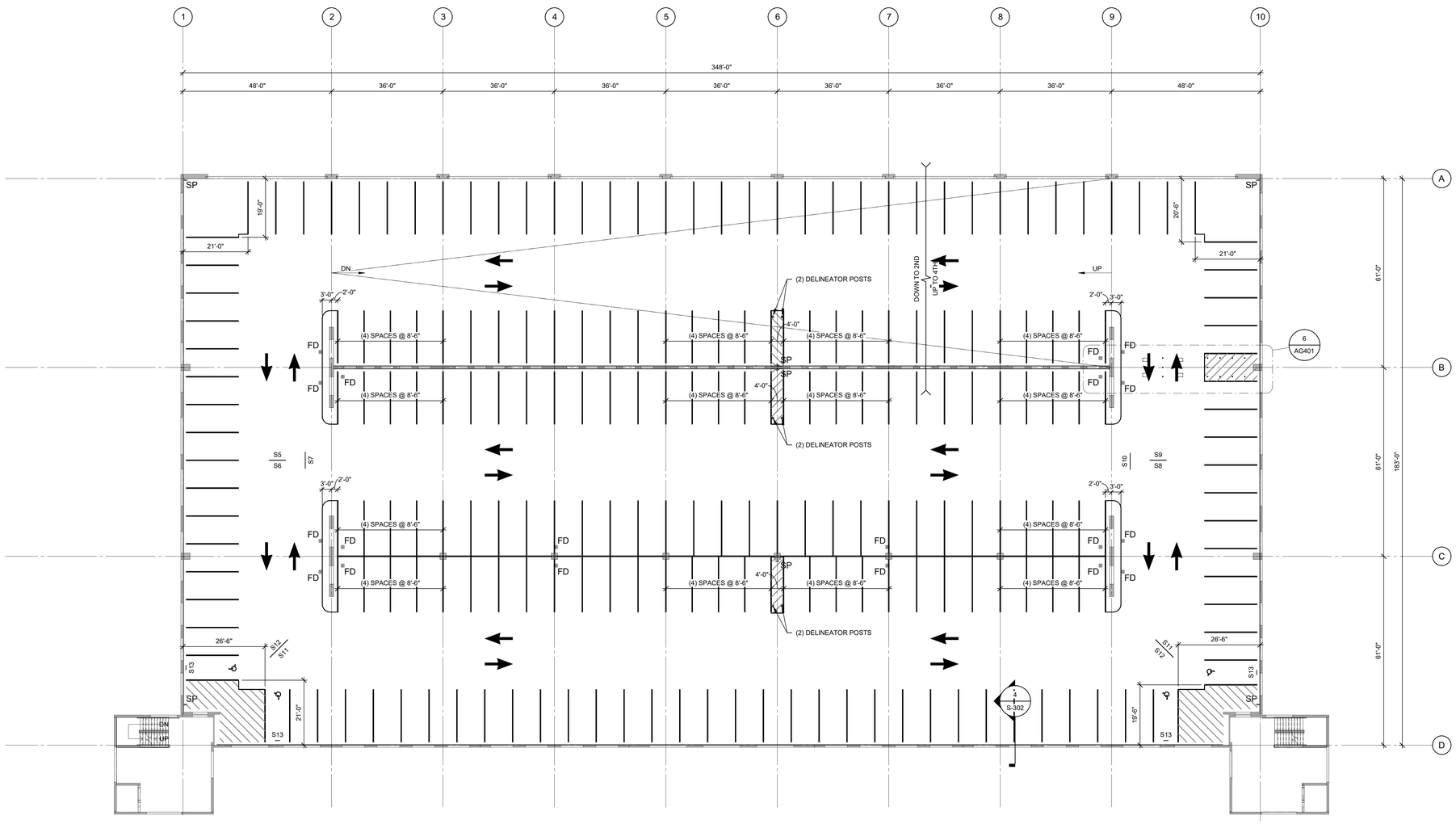

1 LEVEL 3 STRIPING PLAN

1/16" = 1'-0"

SHEET NOTES

1. REFER TO SHEET AG101 FOR GENERAL NOTES.

UNIVERSITY of NORTH CAROLINA WILMINGTON
601 S COLLEGE ROAD
WILMINGTON, NORTH CAROLINA 28403

PARKING DECK II AND SURFACE PARKING (DESIGN-BUILD)
SOUTH CAMPUS - 4965 RIEGEL ROAD

SCO ID NUMBER: 18-19226-01A
CODE: 41828
ITEM: 301

CONTRACTOR
Balfour Beatty Construction

DESIGNER
CLARKNEXSEN
1523 ELIZABETH AVENUE, SUITE 300
CHARLOTTE, NORTH CAROLINA 28204
704·377·8800

CLARK NEXSEN LICENSE NUMBER: C-1028

WALKER CONSULTANTS
13860 Ballantyne Corporate Place
Suite 140
Charlotte, NC 28277
T: 704.247.6230
www.walkerconsultants.com
NC License No. F-0518

McKIM&CREED
CIVIL ENGINEER
243 NORTH FRONT STREET
WILMINGTON, NORTH CAROLINA
28401
910.343.1048

PROFESSIONAL SEAL
NOT FOR CONSTRUCTION
NORTH CAROLINA PROFESSIONAL SEAL 028007 ENGINEER JOEY D. ROWLAND

SUBMITTAL
04/15/2019
CONSTRUCTION DOCUMENT SUBMITTAL 01

REVISIONS

KEY PLAN

SHEET
LEVEL 3 STRIPING PLAN

AG103

DESIGN: Designer
DRAWN: Author
REVIEW: Checker

CN PROJECT NUMBER

4/15/2019 9:34:33 PM
C:\Revit Projects\UNC Wilmington Deck II_r17_cory.grantham.rvt

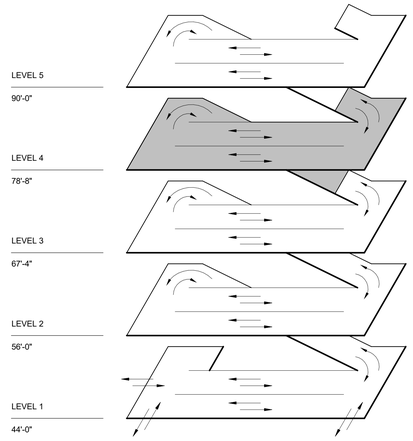

ISOMETRIC

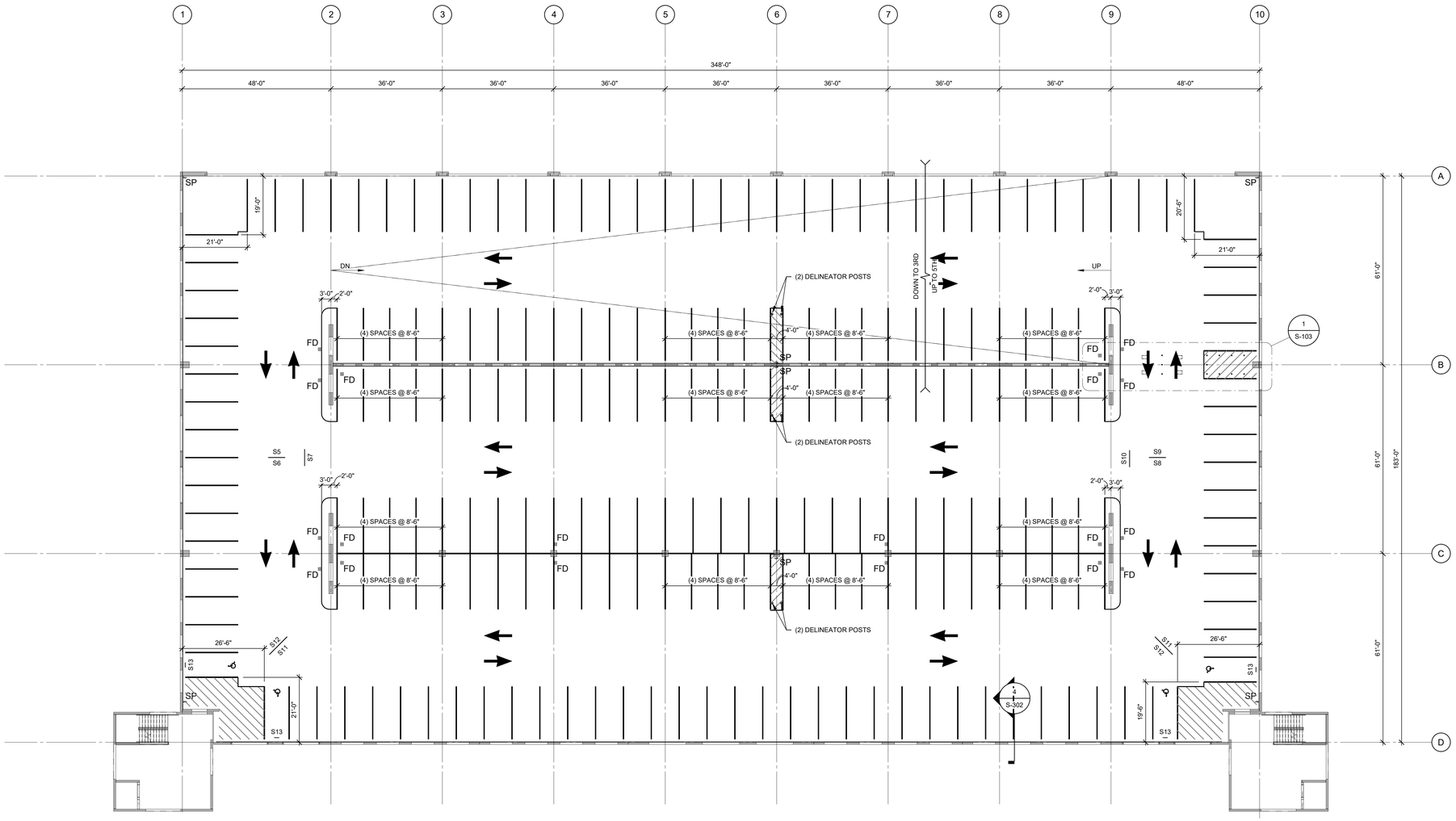

1 LEVEL 4 STRIPING PLAN

1/16" = 1'-0"

SHEET NOTES

1. REFER TO SHEET AG101 FOR GENERAL NOTES.

UNCW

UNIVERSITY of NORTH CAROLINA WILMINGTON
601 S COLLEGE ROAD
WILMINGTON, NORTH CAROLINA 28403

PARKING DECK II AND SURFACE PARKING (DESIGN-BUILD)
SOUTH CAMPUS - 4965 RIEGEL ROAD

SCO ID NUMBER: 18-19226-01A
CODE: 41828
ITEM: 301

CONTRACTOR
Balfour Beatty Construction

DESIGNER
CLARKNEXSEN
1523 ELIZABETH AVENUE, SUITE 300
CHARLOTTE, NORTH CAROLINA 28204
704·377·8800

CLARK NEXSEN LICENSE NUMBER: C-1028

WALKER CONSULTANTS
13860 Ballantyne Corporate Place
Suite 140
Charlotte, NC 28277
T: 704.247.6230
www.walkerconsultants.com
NC License No. F-0518

McKIM&CREED
CIVIL ENGINEER
243 NORTH FRONT STREET
WILMINGTON, NORTH CAROLINA
28401
910.343.1048

PROFESSIONAL SEAL
NOT FOR CONSTRUCTION
NORTH CAROLINA PROFESSIONAL SEAL 028007 ENGINEER JOEY D. ROWLAND

SUBMITTAL
04/15/2019
CONSTRUCTION DOCUMENT SUBMITTAL 01

REVISIONS

KEY PLAN

SHEET
LEVEL 4 STRIPING PLAN

AG104

DESIGN: Designer
DRAWN: Author
REVIEW: Checker

CN PROJECT NUMBER

4/15/2019 5:34:28 PM
C:\Revit Projects\UNC Wilmington Deck II_r17_roy.grantham.rvt

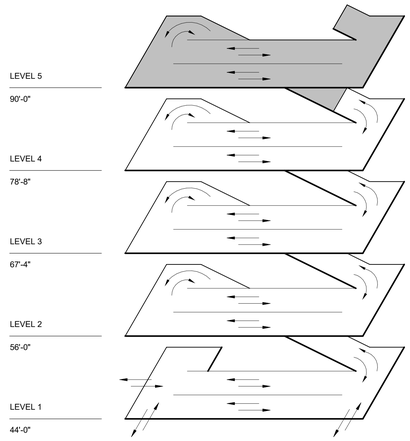

ISOMETRIC

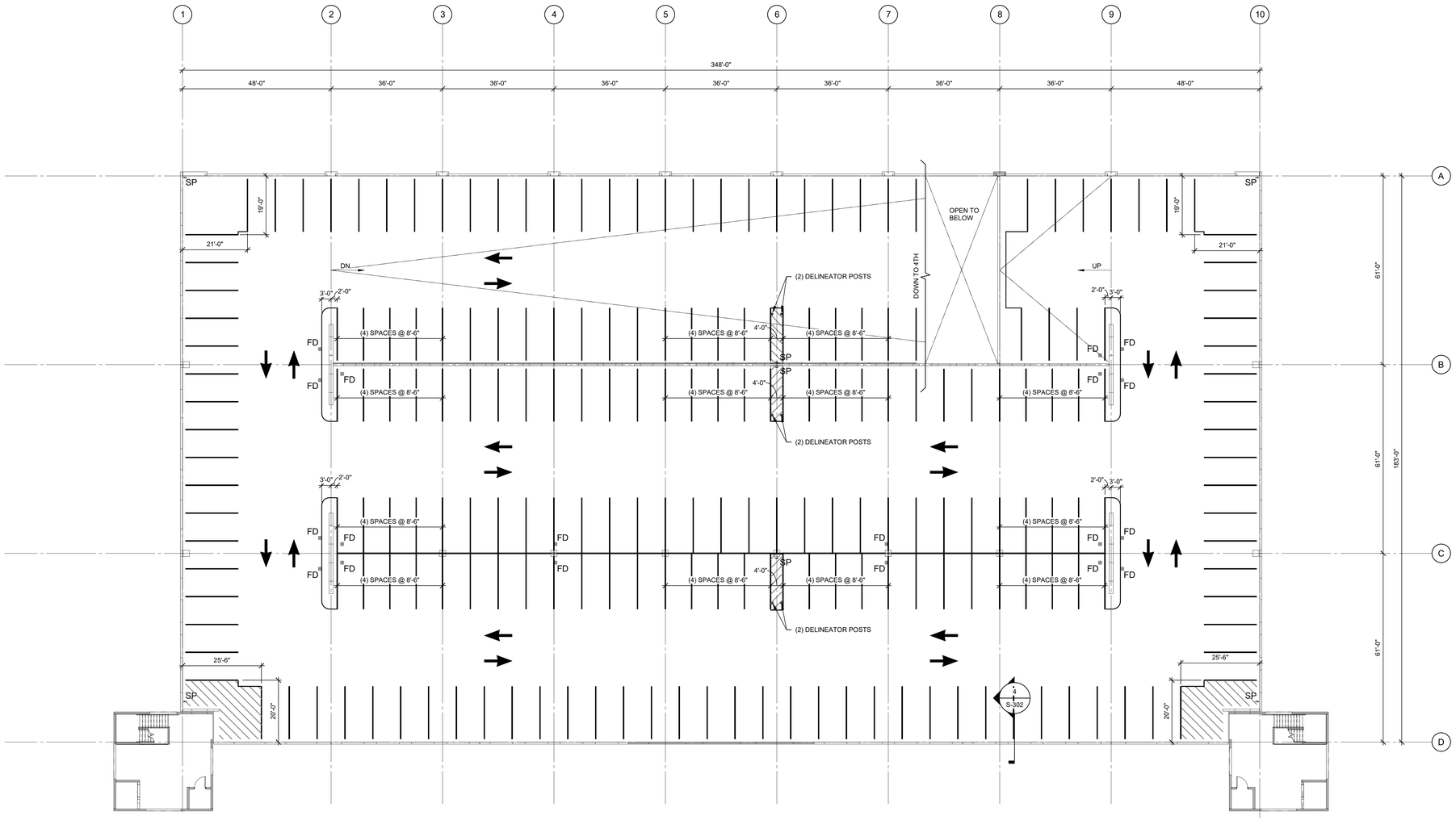

1 LEVEL 5 STRIPING PLAN

1/16" = 1'-0"

SHEET NOTES

1. REFER TO SHEET AG101 FOR GENERAL NOTES.

UNIVERSITY of NORTH CAROLINA WILMINGTON
601 S COLLEGE ROAD
WILMINGTON, NORTH CAROLINA 28403

PARKING DECK II AND SURFACE PARKING (DESIGN-BUILD)
SOUTH CAMPUS - 4965 RIEGEL ROAD

SCO ID NUMBER: 18-19226-01A
CODE: 41828
ITEM: 301

CONTRACTOR
Balfour Beatty Construction

DESIGNER
CLARKNEXSEN
1523 ELIZABETH AVENUE, SUITE 300
CHARLOTTE, NORTH CAROLINA 28204
704·377·8800

CLARK NEXSEN LICENSE NUMBER: C-1028

WALKER CONSULTANTS
13860 Ballantyne Corporate Place
Suite 140
Charlotte, NC 28277
T: 704.247.6230
www.walkerconsultants.com
NC License No. F-0518

McKIM&CREED
CIVIL ENGINEER
243 NORTH FRONT STREET
WILMINGTON, NORTH CAROLINA
28401
910.343.1048

PROFESSIONAL SEAL
NOT FOR CONSTRUCTION
NORTH CAROLINA PROFESSIONAL SEAL 028007 ENGINEER JOEY D. ROWLAND

SUBMITTAL
04/15/2019
CONSTRUCTION DOCUMENT SUBMITTAL 01

REVISIONS

KEY PLAN

SHEET
LEVEL 5 STRIPING PLAN

AG105

DESIGN: Designer
DRAWN: Author
REVIEW: Checker

CN PROJECT NUMBER

4/15/2019 5:34:29 PM
C:\Revit Projects\UNC Wilmington Deck II_r17_roy grantham.rvt

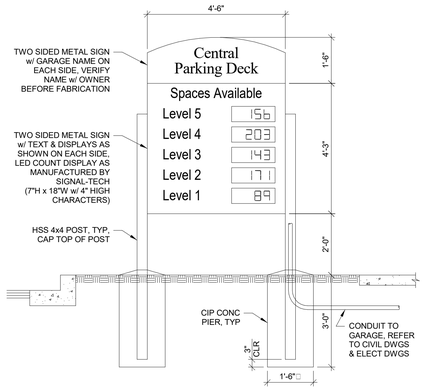

SIGN LOCATED ALONG RIEGEL ROAD

4 ELEVATION
1/2" = 1'-0"

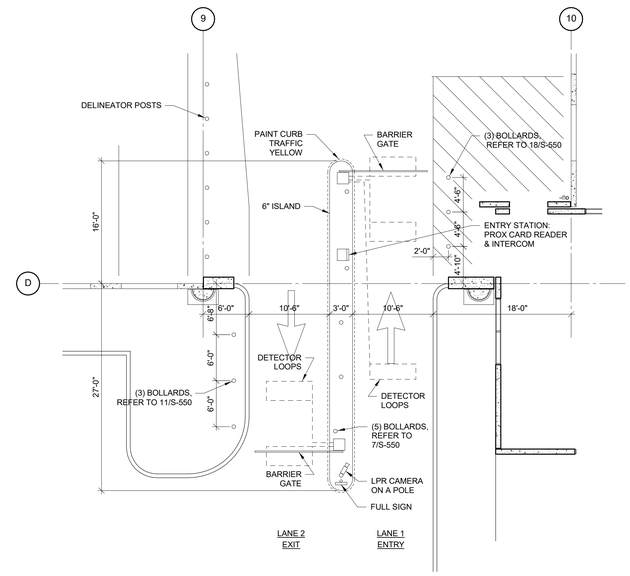

2 ENLARGED PLAN
1/8" = 1'-0"

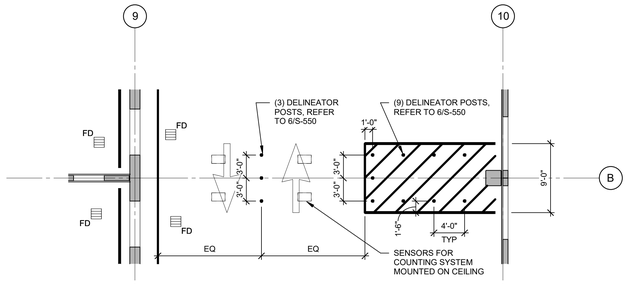

6 ENLARGED PLAN - LEVELS 2,3,4
1/8" = 1'-0"

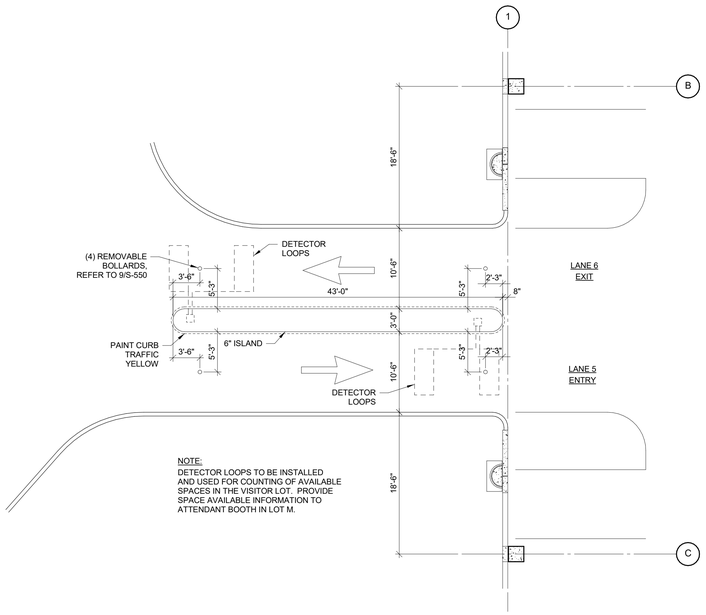

NOTE:
DETECTOR LOOPS TO BE INSTALLED AND USED FOR COUNTING OF AVAILABLE SPACES IN THE VISITOR LOT. PROVIDE SPACE AVAILABLE INFORMATION TO ATTENDANT BOOTH IN LOT M.

3 ENLARGED PLAN
1/8" = 1'-0"

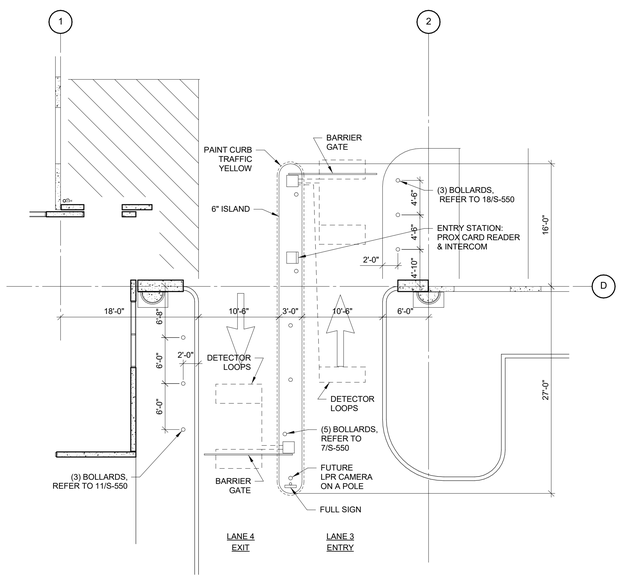

1 ENLARGED PLAN
1/8" = 1'-0"

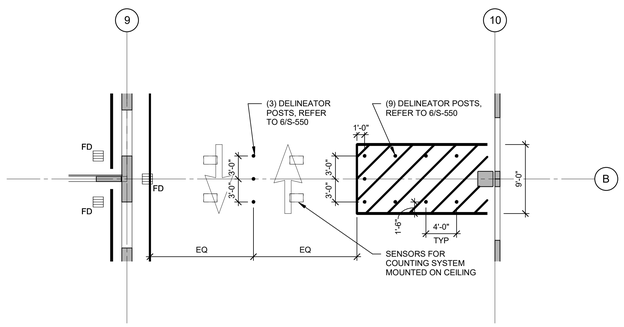

5 ENLARGED PLAN
1/8" = 1'-0"

UNCW
UNIVERSITY of NORTH CAROLINA WILMINGTON
601 S COLLEGE ROAD
WILMINGTON, NORTH CAROLINA 28403

PARKING DECK II AND SURFACE PARKING (DESIGN-BUILD)
SOUTH CAMPUS - 4965 RIEGEL ROAD

SCO ID NUMBER: 18-19226-01A
CODE: 41828
ITEM: 301

CONTRACTOR
Balfour Beatty Construction

DESIGNER

CLARKNEXSEN
1523 ELIZABETH AVENUE, SUITE 300
CHARLOTTE, NORTH CAROLINA 28204
704·377·8800
CLARK NEXSEN LICENSE NUMBER: C-1028

WALKER CONSULTANTS
13860 Ballantyne Corporate Place
Suite 140
Charlotte, NC 28277
T: 704.247.6230
www.walkerconsultants.com
NC License No. F-0518

McKIM&CREED
CIVIL ENGINEER
243 NORTH FRONT STREET
WILMINGTON, NORTH CAROLINA
28401
910.343.1048

PROFESSIONAL SEAL
NORTH CAROLINA PROFESSIONAL SEAL 028007 ENGINEER JOEY D. ROWLAND
NOT FOR CONSTRUCTION

SUBMITTAL
04/15/2019
CONSTRUCTION DOCUMENT SUBMITTAL 01

REVISIONS

KEY PLAN

SHEET
ENTRANCE / EXIT PLANS

AG401

DESIGN: Designer
DRAWN: Author
REVIEW: Checker

CN PROJECT NUMBER

4/15/2019 5:34:30 PM
C:\Revit Projects\UNC Wilmington Deck II_r17_rsy.grantham.rvt

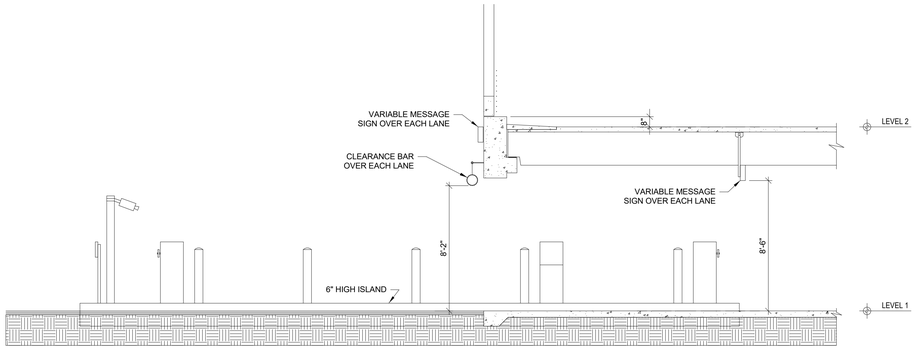

7 SECTION
1/4" = 1'-0"

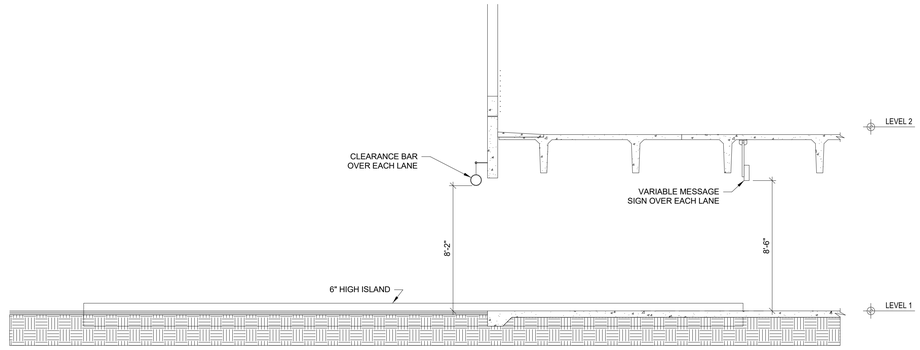

8 SECTION
1/4" = 1'-0"

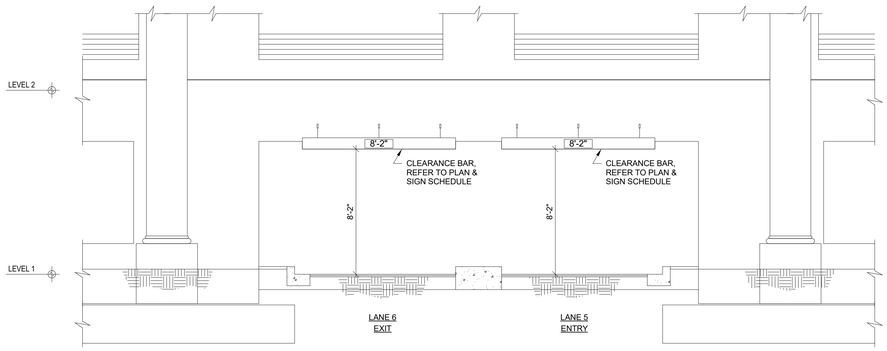

5 ELEVATION
1/4" = 1'-0"

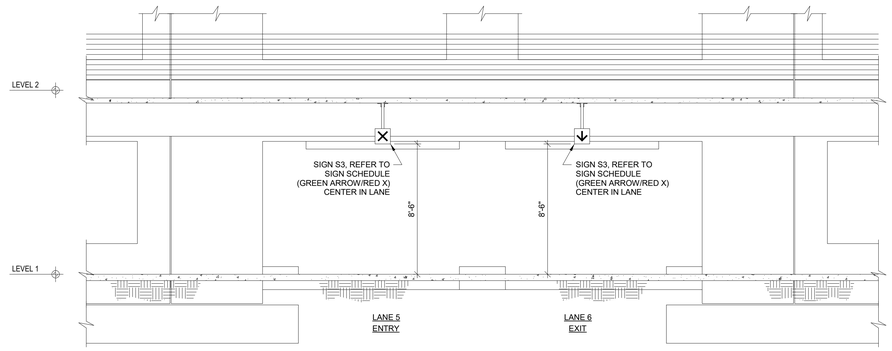

6 ELEVATION
1/4" = 1'-0"

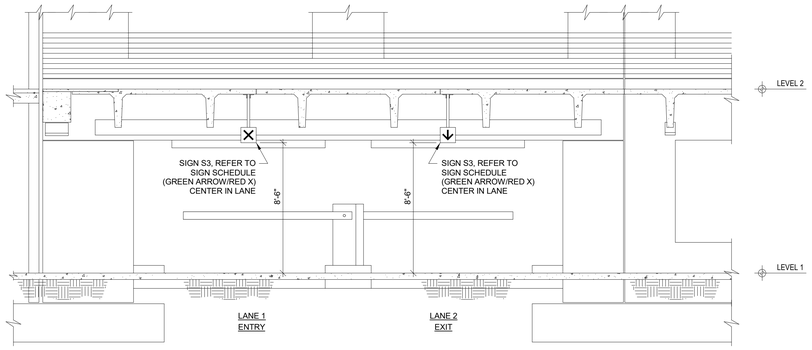

3 ELEVATION
1/4" = 1'-0"

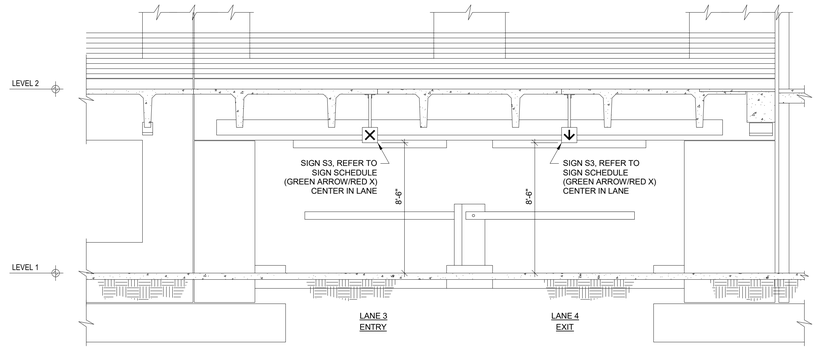

4 ELEVATION
1/4" = 1'-0"

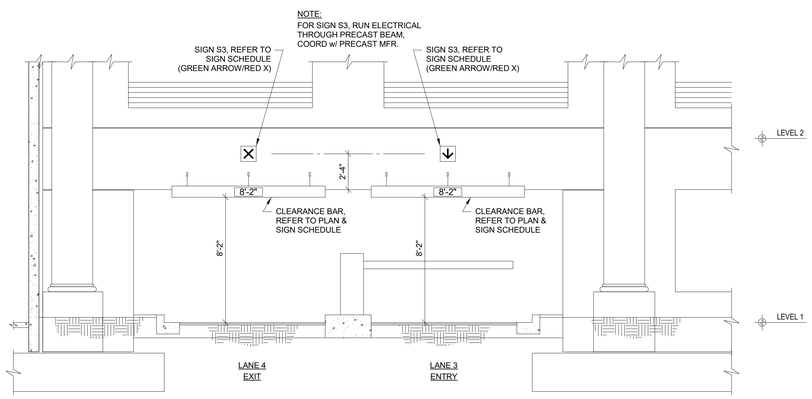

1 ELEVATION
1/4" = 1'-0"

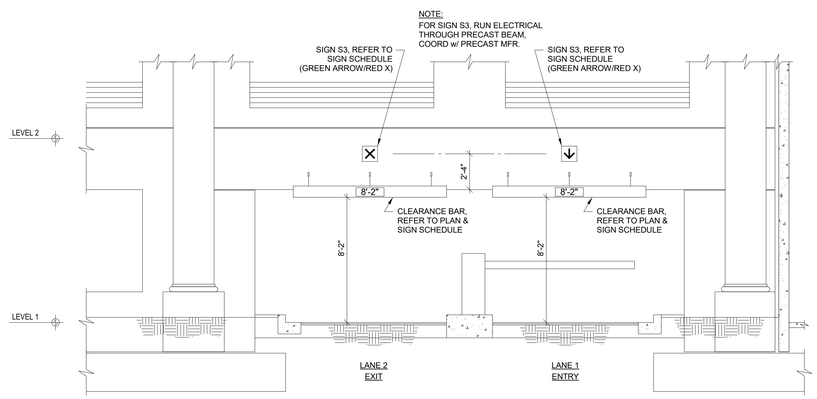

2 ELEVATION
1/4" = 1'-0"

UNCW
UNIVERSITY of NORTH CAROLINA WILMINGTON
601 S COLLEGE ROAD
WILMINGTON, NORTH CAROLINA 28403

PARKING DECK II AND SURFACE PARKING (DESIGN-BUILD)
SOUTH CAMPUS - 4965 RIEGEL ROAD

SCO ID NUMBER: 18-19226-01A
CODE: 41828
ITEM: 301

CONTRACTOR
Balfour Beatty Construction

DESIGNER
CLARKNEXSEN
1523 ELIZABETH AVENUE, SUITE 300
CHARLOTTE, NORTH CAROLINA 28204
704.377.8800

CLARK NEXSEN LICENSE NUMBER: C-1028

WALKER CONSULTANTS
13860 Ballantyne Corporate Place
Suite 140
Charlotte, NC 28277
T: 704.247.6230
www.walkerconsultants.com
NC License No. F-0518

McKIM&CREED
CIVIL ENGINEER
243 NORTH FRONT STREET
WILMINGTON, NORTH CAROLINA
28401
910.343.1048

PROFESSIONAL SEAL
NOT FOR CONSTRUCTION
NORTH CAROLINA PROFESSIONAL SEAL 028007 ENGINEER JOEY D. ROWLAND

SUBMITTAL
04/15/2019
CONSTRUCTION DOCUMENT SUBMITTAL 01

REVISIONS

KEY PLAN

SHEET
ELEVATIONS

AG402

DESIGN: Designer
DRAWN: Author
REVIEW: Checker

CN PROJECT NUMBER

4/15/2019 5:34:31 PM
C:\Revit Projects\UNC Wilmington Deck II_r17_ory.grantham.rvt

AG-SIGN SCHEDULE

MARK	WIDTH	LENGTH	TYPE	BACKGROUND COLOR	LETTER HEIGHT	LETTER COLOR	SIGN DETAIL	MOUNTING DETAIL	MOUNTING HEIGHT	REMARKS
S1	8"	10' - 0"	PVC	BLACK / YELLOW	3" / 2"	BLACK	1/AG601	1,2/AG602	8' - 2"	
S1a	8"	10' - 0"	PVC	BLACK / YELLOW	3" / 2"	BLACK	1A/AG601	1,2/AG602	7' - 4"	
S1b	8"	10' - 0"	PVC	BLACK / YELLOW	3" / 2"	BLACK	1B/AG601	1,2/AG602	7' - 0"	
S2	8"	10' - 0"	PVC	BLACK	6"	WHITE	2/AG601	1,2/AG602	VARIES	MATCH MOUNTING HEIGHT OF ADJACENT CLEARANCE BAR
S3	1' - 0"	1' - 0"	V				3/AG601	5,6/AG602	8' - 6"	
S4	7"	1' - 6"	V				4/AG601	8/AG602	3' - 0"	
S5	1' - 0"	5' - 4"	V	BLACK	6"	WHITE	5/AG601	5,6/AG602	7' - 6"	
S6	1' - 0"	5' - 4"	V	BLACK	6"	WHITE	6/AG601	5,6/AG602	7' - 6"	
S7	1' - 0"	5' - 4"	V	BLACK	6"	WHITE	7/AG601	5,6/AG602	7' - 6"	
S8	1' - 0"	5' - 4"	V	BLACK	6"	WHITE	8/AG601	5,6/AG602	7' - 6"	
S9	1' - 0"	5' - 4"	V	BLACK	6"	WHITE	9/AG601	5,6/AG602	7' - 6"	
S10	1' - 0"	5' - 4"	V	BLACK	6"	WHITE	10/AG601	5,6/AG602	7' - 6"	
S11	1' - 0"	8' - 0"	V	BLACK	6"	WHITE	11/AG601	5,6/AG602	7' - 6"	
S12	1' - 0"	8' - 0"	V	BLACK	6"	WHITE	12/AG601	5,6/AG602	7' - 6"	
S13	1' - 0"	SEE DETAIL	R				13/AG601	3,4,10/AG602	5' - 0"	MUST COMPLY WITH ADA AND NCSBC
S14	1' - 0"	SEE DETAIL	R				14/AG601	3,4,10/AG602	5' - 0"	MUST COMPLY WITH ADA AND NCSBC
S15	1' - 0"	1' - 6"	V	GREEN		WHITE	15/AG602	5,6,7,9/AG602	5' - 0"	

SIGN GENERAL NOTES:
1. HANGING SIGN SIGN HEIGHT TO BE 2" ABOVE BOTTOM OF BEAMS ON EACH LEVEL, UNLESS NOTED OTHERWISE.
2. SIGN CONTRACTOR SHALL REVIEW SIGN LOCATIONS PRIOR TO INSTALLATION WITH ENGINEER TO COORDINATE LIGHTING SYSTEM.
3. SIGNS SHALL BE MOUNTED LEVEL AND PLUMB, UNLESS NOTED OTHERWISE.
4. WHERE (2) TWO SIGNS ARE MOUNTED BACK TO BACK, SMALLEST SIGN SHALL INCREASE TO MATCH LARGER SIGN DIMENSIONS.
5. MAXIMUM BOLT INSERT EMBEDMENT LENGTH 1-1/4", UNLESS NOTED OTHERWISE.
6. DO NOT SCALE DRAWINGS.
7. BACKS AND EDGES OF ALL ALUMINUM SIGNS MOUNTED DIRECTLY TO STRUCTURE SHALL BE PAINTED (SIGN BACKGROUND COLOR) TO PREVENT CATHODIC REACTION.
8. SEE ARCHITECTURAL GRAPHICS PLANS FOR SIGN LOCATIONS.
9. ILLUMINATED SIGNS TO BE U.L. LISTED OR APPROVED EQUIVALENT.
10. ALL FONTS TO BE HELVETICA, OR APPROVED EQUAL.

SIGN TYPE LEGEND
V - VEHICULAR (RETROREFLECTIVE TEXT)
R - REGULATORY (RETROREFLECTIVE)
PVC - PVC CLEARANCE PIPE
PS - PEDESTRIAN SUPERGRAPHICS
PP - PEDESTRIAN PANEL
A - ADA BRAILLE

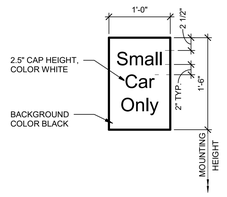

16 SIGN DETAIL S18
1" = 1'-0"

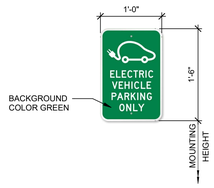

15 SIGN DETAIL S17
1" = 1'-0"

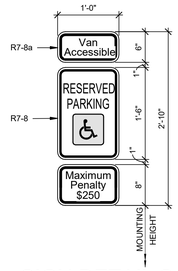

14 SIGN DETAIL S14
1" = 1'-0"

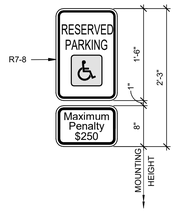

13 SIGN DETAIL S13
1" = 1'-0"

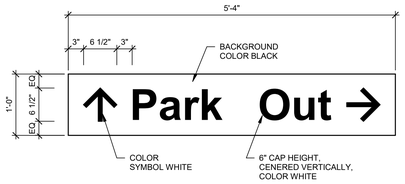

9 SIGN DETAIL S9
1" = 1'-0"

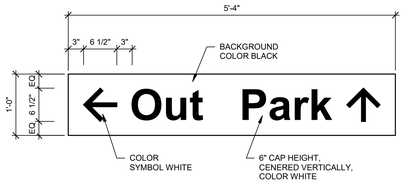

8 SIGN DETAIL S8
1" = 1'-0"

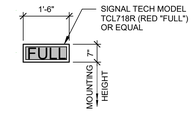

4 SIGN DETAIL S4
1/2" = 1'-0"

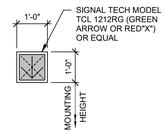

3 SIGN DETAIL S3
1/2" = 1'-0"

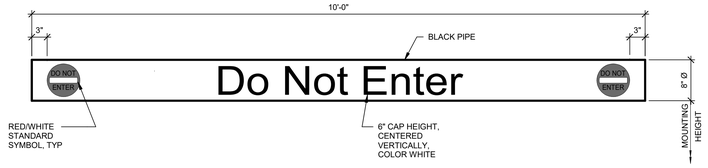

2 SIGN DETAIL S2
1" = 1'-0"

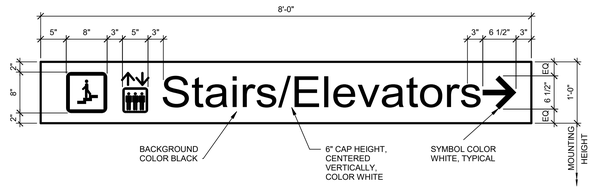

12 SIGN DETAIL S12
1" = 1'-0"

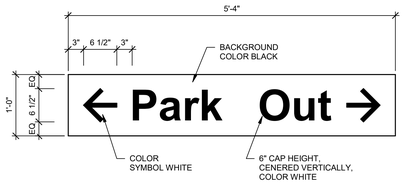

7 SIGN DETAIL S7
1" = 1'-0"

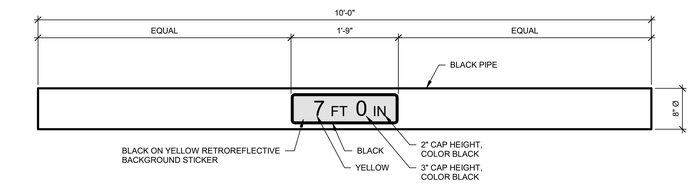

1B SIGN DETAIL S1B
1" = 1'-0"

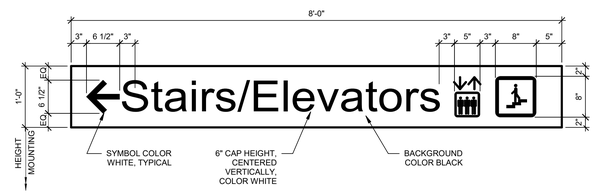

11 SIGN DETAIL S11
1" = 1'-0"

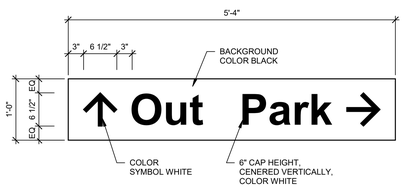

6 SIGN DETAIL S6
1" = 1'-0"

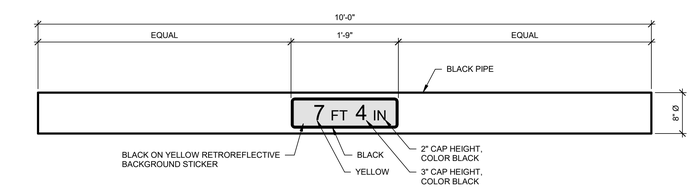

1A SIGN DETAIL S1A
1" = 1'-0"

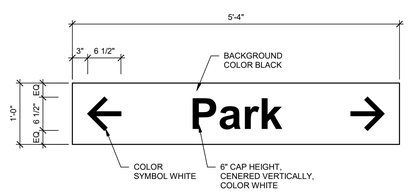

10 SIGN DETAIL S10
1" = 1'-0"

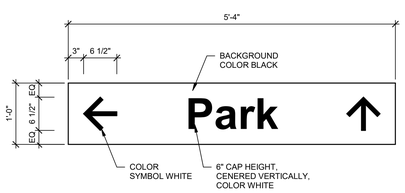

5 SIGN DETAIL S5
1" = 1'-0"

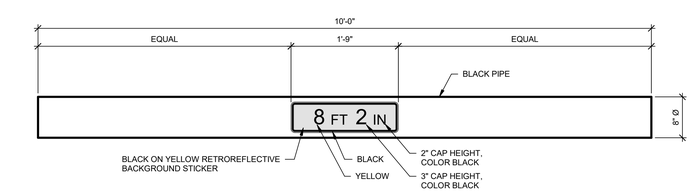

1 SIGN DETAIL S1
1" = 1'-0"

UNCW
UNIVERSITY of NORTH CAROLINA WILMINGTON
601 S COLLEGE ROAD
WILMINGTON, NORTH CAROLINA 28403

PARKING DECK II AND SURFACE PARKING (DESIGN-BUILD)
SOUTH CAMPUS - 4965 RIEGEL ROAD

SCO ID NUMBER: 18-19226-01A
CODE: 41828
ITEM: 301

CONTRACTOR
Balfour Beatty Construction

DESIGNER

CLARKNEXSEN
1523 ELIZABETH AVENUE, SUITE 300
CHARLOTTE, NORTH CAROLINA 28204
704.377.8800
CLARK NEXSEN LICENSE NUMBER: C-1028

WALKER CONSULTANTS
13860 Ballantyne Corporate Place
Suite 140
Charlotte, NC 28277
T: 704.247.6230
www.walkerconsultants.com
NC License No. F-0518

McKIM&CREED
CIVIL ENGINEER
243 NORTH FRONT STREET
WILMINGTON, NORTH CAROLINA
28401
910.343.1048

PROFESSIONAL SEAL
NOT FOR CONSTRUCTION
NORTH CAROLINA PROFESSIONAL SEAL 028007 ENGINEER JOEY D. ROWLAND

SUBMITTAL
04/15/2019
CONSTRUCTION DOCUMENT SUBMITTAL 01

REVISIONS

KEY PLAN

SHEET
SIGN & PACS NOTES

AG601

DESIGN: Designer
DRAWN: Author
REVIEW: Checker

CN PROJECT NUMBER

4/15/2019 5:34:34 PM
C:\Revit Projects\UNC Wilmington Deck II_r17_crsy.grantham.rvt

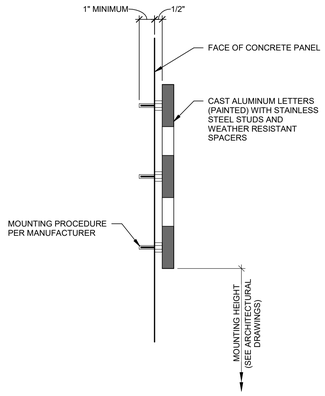

11 SIGN MOUNTING DETAIL
3" = 1'-0"

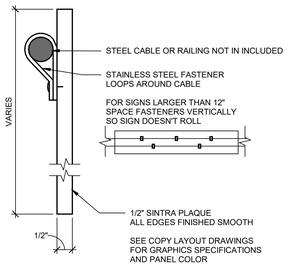

10 SIGN MOUNTING DETAIL
6" = 1'-0"

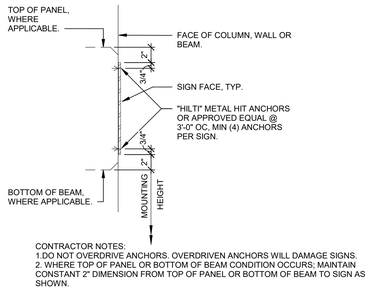

CONTRACTOR NOTES:
1.DO NOT OVERDRIVE ANCHORS. OVERDRIVEN ANCHORS WILL DAMAGE SIGNS.
2. WHERE TOP OF PANEL OR BOTTOM OF BEAM CONDITION OCCURS; MAINTAIN CONSTANT 2" DIMENSION FROM TOP OF PANEL OR BOTTOM OF BEAM TO SIGN AS SHOWN.

9 SIGN MOUNTING DETAIL
1 1/2" = 1'-0"

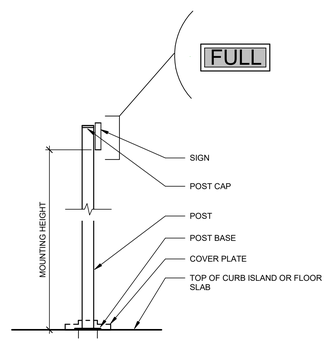

NOTES:
1. POST, MOUNTING HARDWARE AND ANCHORS TO BE BY SIGN MANUFACTURER
2. POST TO BE SHIMMED TO VERTICAL. SIGN BOX, HOOD, POST, AND ALL EXPOSED HARDWARE TO BE PAINTED TO MATCH PARKING EQUIPMENT.
3. SIGN CONTRACTOR TO COORGINATE INSTALLATION WITH PARKING EQUIPMENT CONTRACTOR.

8 SIGN MOUNTING DETAIL
3/4" = 1'-0"

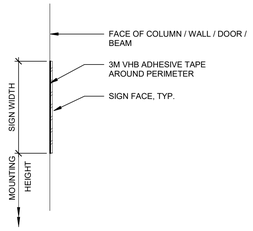

7 SIGN MOUNTING DETAIL
1 1/2" = 1'-0"

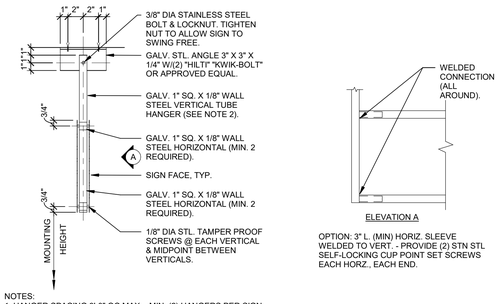

OPTION: 3" L. (MIN) HORIZ. SLEEVE WELDED TO VERT. - PROVIDE (2) STN STL SELF-LOCKING CUP POINT SET SCREWS EACH HORZ., EACH END.

NOTES:
1. HANGER SPACING 3'-0" OC MAX. - MIN. (2) HANGERS PER SIGN.
2. OPTIONAL HANGER CONNECTION - 3/8" STAINLESS STEEL CLEVIS PIN W/ HAIRPIN COTTER.
3. MAX SIGN CANTILEVER 1'-0".

6 SIGN MOUNTING DETAIL
1 1/2" = 1'-0"

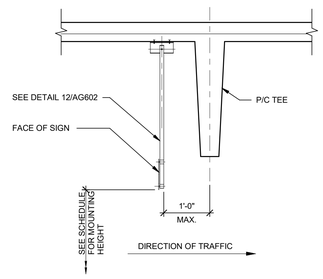

5 SIGN MOUNTING DETAIL
3/4" = 1'-0"

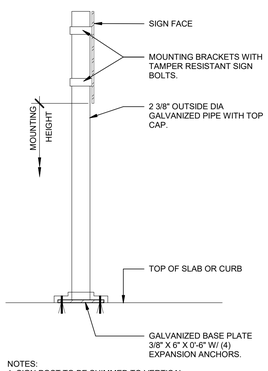

NOTES:
1. SIGN POST TO BE SHIMMED TO VERTICAL.

4 SIGN MOUNTING DETAIL
1 1/2" = 1'-0"

PACS GENERAL NOTES:
1. DRAWINGS ARE SCHEMATIC. PACS CONTRACTOR TO COORDINATE FINAL CONDUIT QUANTITIES, SIZES, LOCATION OF CONDUIT STUB UPS, PROTECTIVE BOLLARDS, AND EQUIPMENT MOUNTING LOCATIONS.

PACS ELECTRICAL NOTES:
1. ALL EXPOSED CONDUIT TO BE RIGID HOT DIPPED GALVANIZED.
2. SEE EQUIPMENT LEGEND FOR POWER REQUIREMENTS.
3. COORDINATE WITH CIVIL AND ELECTRICAL DRAWINGS FOR POWER SUPPLY AND DATA LINE INTERFACES.
4. POWER AND COMMUNICATIONS SHALL BE LESS THAT 3%. CONDUITS AND CONDUCTORS SHALL BE SIZED PER THE NATIONAL ELECTRICAL CODE REQUIREMENTS. CONSULT ELECTRICAL ENGINEER FOR DETAILS.

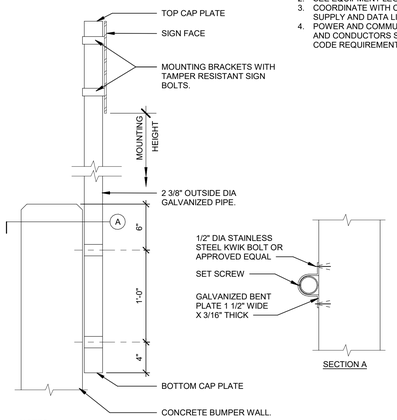

NOTES:
1. SIGN POST TO BE VERTICAL.
2. LOCATE REINFORCEMENT PRIOR TO INSTALLATION OF BENT PLATE BRACKETS.

3 SIGN MOUNTING DETAIL
1 1/2" = 1'-0"

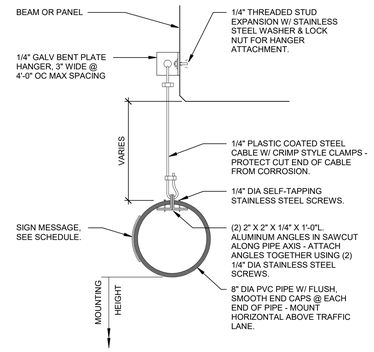

2 SIGN MOUNTING DETAIL
1 1/2" = 1'-0"

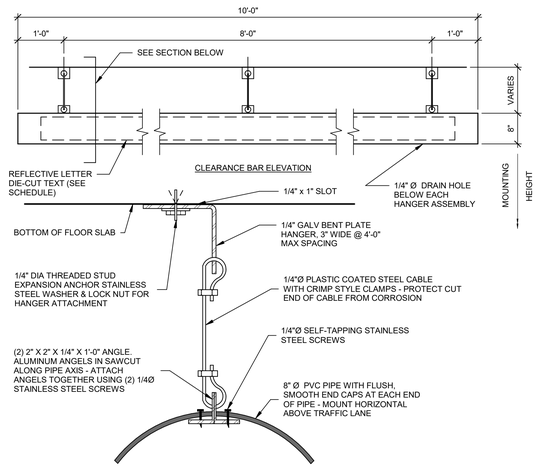

1 SIGN MOUNTING DETAIL
3/4" = 1'-0"

UNCW
UNIVERSITY of NORTH CAROLINA WILMINGTON
601 S COLLEGE ROAD
WILMINGTON, NORTH CAROLINA 28403

PARKING DECK II AND SURFACE PARKING (DESIGN-BUILD)
SOUTH CAMPUS - 4965 RIEGEL ROAD

SCO ID NUMBER: 18-19226-01A
CODE: 41828
ITEM: 301

CONTRACTOR
Balfour Beatty Construction

DESIGNER
CLARKNEXSEN
1523 ELIZABETH AVENUE, SUITE 300
CHARLOTTE, NORTH CAROLINA 28204
704 377 8800
CLARK NEXSEN LICENSE NUMBER: C-1028

WALKER CONSULTANTS
13860 Ballantyne Corporate Place
Suite 140
Charlotte, NC 28277
T: 704.247.6230
www.walkerconsultants.com
NC License No. F-0518

McKIM&CREED
CIVIL ENGINEER
243 NORTH FRONT STREET
WILMINGTON, NORTH CAROLINA
28401
910.343.1048

PROFESSIONAL SEAL

NOT FOR CONSTRUCTION
NORTH CAROLINA PROFESSIONAL SEAL 028007 ENGINEER JOEY D. ROWLAND

SUBMITTAL
04/15/2019
CONSTRUCTION DOCUMENT SUBMITTAL 01

REVISIONS

KEY PLAN

SHEET
SIGNS & MOUNTING DETAILS

AG602

DESIGN: Designer
DRAWN: Author
REVIEW: Checker

CN PROJECT NUMBER

4/15/2019 5:34:36 PM
C:\Revit Projects\UNC Wilmington Deck II_r17_roy grantham.rvt

I. GENERAL

A. CONSTRUCTION

1. Construction shall be in accordance with all applicable Federal, State of North Carolina, and City of Wilmington codes and ordinances (2018 North Carolina Building Code) including fire codes.
2. This structure is classified as an open parking structure, occupancy Group S-2, and as construction Type IB, Unprotected, Non-Combustible.
3. Contractor shall check all plans, sections, and details drawn on Structural Drawings for compatibility with Architectural Drawings. Structural Drawings show only structural elements of parking structure. Discrepancies, if any, shall be reported to Engineer for clarification or adjustments before proceeding with work.

B. DESIGN LOADS (All loads are service loads unless noted)

Description		Load
1. Dead Loads		
a. Floor system and framing		Self-Weight
b. Mechanical, Electrical, Plumbing		3 psf
2. Live Loads		
a. Roof (Stair / Elevator Towers)		20 psf
b. Supported parking and drive areas	Tees, Beams	40 psf unreduced
	Columns	32 psf reduced
c. Concentrated wheel load (on 4.5" x 4.5" area)		3,000 lbs
d. Bumper impact, on 1-ft sq, 18" & 27" (not concurrently) above finished floor		6,000 lbs
e. Slabs on grade		40 psf
f. Stairs, landings, and lobbies		100 psf
g. Elevator mechanical room		100 psf
3. Snow loads		
a. Ground snow load (P_g)		10 psf
b. Flat roof snow load (P_f)		8.4 psf
c. Minimum Snow load ($P_{f,min}$)		10 psf
d. Snow exposure factor (C_e)		1.0
e. Snow load importance factor (I_S)		1.0
f. Roof thermal factor (C_t)		1.2
g. Rain-On-Snow surcharge		5 psf
4. Wind Design Criteria		
a. Basic wind speed (3-second gust)		150 mph (ultimate)
b. Wind load importance factor(I_W)		1.0
c. Wind exposure		B
d. Internal pressure coefficient		±0.18
e. Components and cladding		See Specifications
5. Seismic Design Criteria		
a. Seismic importance factor (I_E)		1.0
b. Spectral response acceleration for short period (S_S)		0.213g
c. Spectral response acceleration for 1-second period (S_1)		0.090g
d. Site class		D
e. Design spectral response acceleration for short period (S_{DS})		0.228g
f. Design spectral response acceleration for 1-second period (S_{D1})		0.144g
g. Seismic design category		C
h. Resisting system in east-west direction		
1. Basic structural system		A.5) Bearing Wall System - Intermediate Precast Shear Walls
2. Design base shear (V)		1930k ultimate
3. Seismic response coefficient (C_S)		0.058
4. Response modification factor (R)		4
5. Deflection amplification factor (C_d)		4
6. Analysis procedure		Equivalent Lateral Force
i. Resisting System in north-south direction		
1. Basic structural system		A.5) Bearing Wall System - Intermediate Precast Shear Walls
2. Design base shear (V)		1930k ultimate
3. Seismic response coefficient (C_S)		0.058
4. Response modification factor (R)		4
5. Deflection amplification factor (C_d)		4
6. Analysis procedure		Equivalent Lateral Force
6. Thermal & Volume Change Design Criteria: Per PCI Design Handbook (7th Edition)		
a. Design temperature differential		50° F
b. Annual average ambient relative humidity		80%

C. MISCELLANEOUS

1. Fire ratings, conforming to MNL-124-89 and STM E119 are as follows: OR one hour.

Structural Element	Hours Provided	Hours Required
a. Precast concrete tees or hollow core units	1	1
b. Precast Concrete beams	1	1
c. Concrete columns	2	2
d. Concrete walls	2	2
e. Stair/ elevator towers	2	2
f. Bridges	2	2

2. Future Expansion
   a. This parking facility is not designed for future expansion.
3. Existing Construction
   a. Field verify all existing elevations, dimensions, and conditions shown on drawings before any material fabrication and erection or concrete placement for new construction. Immediately report all discrepancies to Engineer.

II. FOUNDATION WORK

A. Foundations, retaining walls, basement walls, foundation drainage and slabs on grade have been designed in accordance with recommendations of ECS Southeast Report Number 22:27313R2, dated February 5, 2019. For more information see sections of Specification Division 31.

B. Foundation Design (assuming rigid inclusions)

Description	Allowable Load	Settlement	Differential Total
1. Spread footings	net 6,000 psf	1 1/2"	1"
2. Strip footing	net 6,000 psf	1 1/2"	1"

C. Retaining Wall Design

1. Design equivalent fluid pressure behind basement type walls laterally supported top and bottom. p= (59 x h + K_o x q**)
2. Design equivalent fluid pressure behind cantilevered retaining walls p= (39 x h + K_a x q**)
3. Coefficient of sliding friction tan (delta) = 0.40

   p = pressure (psf); h=height (ft);
   K_o = coefficient of at-rest earth pressure = 0.47
   K_a = coefficient of active earth pressure = 0.31
   q = surcharge (psf)** = 40 psf @ interior, 100 psf @exterior

D. See Specifications Section of Division 31 for excavation, dewatering and compaction.

E. Footings shall be on Rigid Inclusions. Rigid Inclusions shall be a delegated design by a licensed design professional.

F. Foundation shall extend below finished grade 30" (minimum)

G. Before placement of granular fill below slab-on-grade, entire surface shall be proofrolled and observed by testing agency for soft or unstable material. Remove unacceptable material and replace with approved granular fill. Subgrade shall be compacted to 98% maximum dry density per ASTM D698.

H. Grain drainage layer material shall consist of: Gravel (GP, GW, GP-SM, GW-SM), Sand (SP, SW, SP-SM, SW-SM). Material should have less than 20 percent fines, and can consist of No. 57 stone, No. 67 stone, ABC, or screenings (ACI 302.1R-15). Between the gravel or stone and the subgrade, provide a layer of non-woven geotextile (Mirafi 140N or equivalent).

I. Foundation drains shall be provided behind all retaining walls. The system shall consist of a 4-inch perforated, closed joint drain line surrounded by a minimum of 6 inches of AASHTO Size No. 57 Stone wrapped with non-woven geotextile (Mirafi 140N or equivalent).

III. CONCRETE

A. Material Properties - Concrete:

	F'c psi at 28 day	Max W/C Ratio	Max Slump Inches	Total Air Content (±1.5%)	Max. Nom Aggregate Size
1. Cast-in-place concrete					
a. Footings	4,000	0.45	4	No Test	2"
b. Column piers	5,000	0.45	4	5	3/4"
c. Tee toppings, pour strips	5,000	0.40	3*	7	3/4"
d. Walls	4,000	0.45	3*	5	3/4"
e. Slab on grade	4,000	0.45	4	6	1
f. Stairs, landings, lobbies	4,000	0.45	4	7	3/4"
g. All other	4,000	0.45	4	5	3/4"
2. Precast concrete					
a. Columns	6,000	0.40	**	5 1/2	3/4"
b. Tees	6,000	0.40	**	5 1/2	3/4"
c. Beams	6,000	0.40	**	5 1/2	3/4"
d. Hollow core units	6,000	0.40	**	5 1/2	3/4"
e. Solid slabs	6,000	0.40	**	5 1/2	3/4"
f. Wall panels	6,000	0.40	**	5 1/2	3/4"
3. Other Concrete					
a. Columns base drypack	8,000	N/A	0	No Test	No. 4
b. Hollow core units keyway grout	3,000	N/A	8	6	3/8"
c. Masonry wall grout fill	3,000	N/A	8-10	No Test	3/8"
d. NSNS grout	8,000	N/A	0	No Test	No. 4

*Prior to adding water reducer.
**No slump requirement.

4. For additional information regarding Air Entrainment, see Specification Section 033000.
5. All concrete is Normal Weight 145 pcf.

B. Material Properties - Reinforcing and Connection Steel:

		Fy, psi	ASTM
1. Welded bars		60,000	A615*
	OR	60,000	A706
2. All bars, UN		60,000	A615
3. Welded wire reinforcement (smooth)		65,000	A185
4. Prestressing strand		270,000 (fpu)	A416
5. Coil bolts and coil rods		65,000 U.N.	
6. Welding for steel reinf.			AWS D1.4-11
7. Deformed bar anchors		70,000	A496
8. Headed anchor studs		60,000 (fs)	A108
9. Headed/terminator bars		60,000	A970

*with proper reheat per AWS standards.

C. General Notes for Cast-in-Place and Precast Concrete:

1. Column reinforcing shall be continuous, or shall be spliced according to ACI 318-14, Section 25.5.
2. Welded wire reinforcement shall be spliced per ACI 318-14, Section 25.5.4.
3. Provide extra reinforcing around all openings, including door openings: two #5 bars all four sides of each opening and extend 2 feet beyond corners of opening. Add two #5 bars 4 feet long as diagonal bars at each corner.
4. Where shown hooked, provide standard 90 degree bar hooks unless noted.
5. When reinforcement is lap spliced, provide Class B splice typical, unless noted. See details for splice locations.
6. Slab-on-grade reinforcement shall be #3 @ 18 in. o.c., ew, placed 2 in. clear from top of slab.
7. Provide a 3/4 inch chamfer on all exposed corners of concrete. Top edges of walls may be tooled.
8. Provide control/construction joints as shown on Drawings. For more information, see Specification Section 033000.
9. All inserts and coil rods shall be Galvanized. See Specifications Section 033000 for more information.
10. PIC embed shop drawings must be approved and embedded items installed where required prior to placing concrete.
11. Stripping of forms shall be in accordance with Specification Section 033000.

D. Additional Note for Precast Concrete:

1. Parking Structure contract Drawings are based on performance type design for precast superstructure. An integral part of this Project is preparation of final Design Drawings, Design Calculations, and Shop Drawings necessary for fabrication and construction of all precast concrete pieces and required accessories in accordance with all code and design requirements. See Specification Section 034100 for more requirements.
2. Provide all openings, reveals, drips, blockouts, inserts, etc., cast into precast according to Architectural, Mechanical and Electrical Drawings. Coordinate exact sizes and locations with respective Contractor.
3. Provide 2 #4 L bars minimum (3'-0" legs) at each corner of precast panels.
4. See Drawings for protection of embedded metals.
5. Bending requirements for reinforcing bars to be hot-dip galvanized vary slightly from ACI 318. Refer to ASTM A767 referenced in Specification Section 034100.
6. When erecting Precast structure, guy and plumb structure for stability. Guying and bracing shall remain until final stability is achieved. See Specification Section 034100 for information on plumbness.
7. Structure is designed for its final service condition. Contractor shall be responsible for piece design to withstand handling and erection forces, erection sequence, guying, staying, and shoring as required to assure structural stability during construction.
8. For exterior columns, no outward out-of-plumbness tolerance is permitted.
9. Install expansion joints after all guying and bracing has been removed and column plumbness has been measured to be within tolerance.
10. Minimum additional load factor of 1.2 shall be used for design of all superstructure connections unless superseded by seismic requirements of applicable building code. See specifications section 034100 for more information.
11. Floor drainage layout is based on a maximum double tee camber of 1". Design of P/C double tees shall be such that final in-service camber does not exceed this value. Precast Contractor shall review floor drainage layout and notify Engineer of any discrepancies or constructability issues prior to fabrication.
12. Steel connections providing gravity support either directly or indirectly (such as torsion connections) shall be fireproofed to meet fire rating requirement of supported structural element.

E. Concrete Protection for Reinforcement:

1. Specified concrete protection for reinforcement shall be per ACI 318-14, Section 20.6.
2. For prestressed and non-prestressed reinforcement in prestressed/precast concrete members, specified concrete protection at top members shall be 1-1/2 inches consistent with ACI 362.1R-12, "Guide for the Design of Durable Parking Structures."
3. For reinforcement in cast-in-place concrete, specified concrete protection shall be as follows:

	Concrete Cover (Inches)
a. Footing top reinforcement	2
b. Footing bottom and side reinforcement	3
c. Wall reinforcement #5 bar and smaller	1 1/2
d. Wall reinforcement #6 bar and large	2

F. Saw Cutting of Control Joints for Cast-In-Place Concrete Slabs:

1. The specifications specify that the concrete slab-on-grade control joints are to be tooled joints. Tooled joints provide the best performance for crack control due to the early creation of the joint with respect to the hardening timeline of the concrete
2. The Contractor may opt to use the process of saw cutting the slab-on-grade provided the following procedure is strictly followed.
3. The procedure consists of an initial saw cut as soon as possible after the concrete pour and a secondary beveled cut along the initial cut within 24 hours to form the complete slab-on-grade control joint.
4. The procedure references the following equipment:
   a. Initial cut made from a saw with a 1/8" wide blade creating a 1/2" deep cut.
   b. A handheld saw for completing the initial and secondary cuts at walls and columns.
   c. Secondary cut made from a decorative saw with a 5/8" beveled blade.
5. The procedure is as follows:
   a. Pour and finish slab-on-grade.
   b. Make tooled joints at locations where saw cutting may be difficult such as joints at washes where slab is sloping.
   c. Make initial saw cut as soon as the broom finish will not be damaged by the saw operating on the slab. Run the saw cut across full length of the slab and complete the cuts at the ends near walls and columns with a handheld saw.
   d. Use a vacuum or a blower to remove saw cut concrete dust so as to not affect the curing of the concrete slab.
   e. Protect all joint intersections with a "joint saver" to keep joint spalling to a minimum.
   f. Make secondary cut no later than 24 hours after the initial cut. The saw with the beveled blade shall use a guide to ride in the initial cut to create a clean joint.

IV. CONCRETE MASONRY

A. Material Properties:

1. Compressive strength of masonry, f'm = 2000 psi.
2. Mortar type "M" or "S".

B. General Concrete Masonry Notes:

1. Provide dowels between foundations and walls equal to size and spacing of vertical wall reinforcing, unless noted otherwise.
2. Minimum reinforcement for masonry wall subject to bumper loads shall be #5 @ 8 in. o.c. for a height of 2 feet 8 inches above floor and grout all block cores solid up to 2 feet 8 inches above floor. Minimum reinforcement for masonry walls not subject to bumper loads shall be #4 @ 48" o.c. plus one #4 verticals at corners, edges of openings, and ends of walls. Grout block cells with reinforcement full.
3. In masonry walls, provide 8-in.-wide bond beam lintels reinforced with two #5 bars continuous unless shown otherwise on Drawings. Concrete block for three courses directly below bond beam bearing and extending out at an angle of 45 degrees shall be solid block or shall be grouted solid, unless noted otherwise.
4. Provide control joints in masonry walls at 20 ft. on center maximum or as noted on Drawings.

V. STRUCTURAL STEEL

	Fy, psi	ASTM
A. Structural Shapes		
1. W-shapes	50,000	A992
2. M-shapes, S-shapes, HP-shapes, channels, angles	36,000	A36
B. Hollow Structural Sections		
1. All shapes	50,000	A1085
C. Steel Pipes	35,000	A53 GR. B
D. Structural Plates and Bars	36,000	A36
E. Bolts		
1. 1/2" dia. to 1" dia., UN	92,000	A325
2. 1-1/8" dia. to 1-1/2" dia. UN	81,000	A325
F. Anchor Rods	36,000	F1554 GR. 36
G. Welding Electrodes	E70XX	AWS D1.1-11

H. General Structural Steel Notes
1. Lintel shall have a minimum end bearing on masonry of 8 inches, but not less than 1 inch of such bearing for each foot of opening.

VI. MISCELLANEOUS

A. For exact sizes and locations of mechanical and electrical items and openings, consult respective subcontractors.

B. See specifications for additional information.

C. Inserts called out on Drawings shall be as designated below for diameters indicated. Nomenclature is for Dayton/Richmond Concrete Accessories.

1. 1/2 inch diameter,	Type B-16	
2. 3/4 inch diameter,	Type F-56,	2 Strut
3. 1 inch diameter,	Type F-56,	2 Strut
4. 1-1/4 inch diameter,	Type F-58	4 Strut

5. Provide coil bolts and rods with necessary penetration into inserts to develop full strength per manufacturer's recommendations.

D. Post-Installed Anchors or Reinforcing Bars

1. Post-installed anchors shall only be used where shown on Construction Documents. Contractor shall obtain approval from Engineer-of-Record prior to installing post-installed anchors or reinforcing bars in place of missing or misplaced cast-in-place anchors or reinforcing bars. Care shall be taken in placing post-installed anchors or reinforcing bars to avoid conflicts with existing rebar. Holes shall be drilled and cleaned in accordance with manufacturer's written instructions. Substitution request for installation other than those shown shall be submitted by Contractor to Engineer-of-Record along with calculations that are prepared and sealed by a registered professional engineer. Calculations shall demonstrate that substituted product is capable of achieving pertinent equivalent performance values (minimum) of specified product using appropriate design procedure and/or standard(s) as required by building code. See Specification Section 033000.
   a. Concrete Anchors
      1. Mechanical anchors for use in cracked and uncracked concrete shall have been tested and qualified for use in accordance with ACI 355.2 and ICC-ES AC193.
      2. Adhesive anchors for use in cracked and uncracked concrete shall have been tested and qualified for use in accordance with ACI 355.4 as modified by ICC-ES AC308.
   b. Masonry Anchors
      1. Anchorage to Solid-Grouted Concrete Masonry
         a. Mechanical and concrete screw anchors for use in solid-grouted concrete masonry shall have been tested and qualified for use in accordance with ICC-ES AC01 or AC106, respectively.
         b. Adhesive anchors for use in solid-grouted concrete masonry shall have been tested and qualified for use in accordance with ICC-ES AC58.
      2. Anchorage to Hollow Concrete Masonry/Unreinforced Clay Brick Masonry
         a. Screw anchors for use in hollow concrete masonry shall have been tested and qualified in accordance with ICC-ES AC106.
         b. Adhesive anchors with screen tubes shall be tested and qualified in accordance with ICC-ES AC58 or AC60, as appropriate. Appropriate screen tube shall be used as recommended by adhesive manufacturer.

E. Abbreviations - See Sheet S-002

F. DO NOT SCALE THE DRAWINGS

VII. DEFERRED SUBMITTALS

A. Following items will have a design that is performed and submitted by a specialty contractor during construction phase of project. For information, see appropriate Specification Sections related to these items.

1. Rigid Inclusions
2. Precast concrete elements
3. Light gage framing
4. Barrier Strand System

B. Engineer of Record shall review deferred submittal drawings and calculations prepared by Contractor and forward them to Building Official with notation indicating deferred submittal documents have been reviewed and found to be in general conformance with design requirements. Deferred submittal items shall not be installed until design and submittal documents have been approved by Building Official.

VIII. CONNECTION COMPONENT COORDINATION

A. Following specifies subcontractor responsible for providing connection components. Where connections occur between two different trades, Construction Manager shall coordinate between the two subcontractors as required to locate and install these items. Refer to specifications for additional information.

B. Embedded plates in precast concrete elements shall be provided by precast contractor. CM shall coordinate between precast contractor and appropriate subcontractor to locate embedded plates as necessary.

C. Precast-to-precast steel connection and bearing components, including angles, tubes and other steel shapes as required by design, shall be provided by precast contractor. Where coating is removed or damaged during installation, precast contractor shall repair coating in field.

D. Structural steel-to-precast connection components shall be provided by structural steel contractor. Embedded plates (where required) in precast for connection shall be provided by precast contractor. Where coating is removed or damaged during installation, structural steel contractor shall repair coating in field.

E. Precast concrete-to-cast-in-place concrete connection components, including angles, shall be provided by precast contractor. Where coating is removed or damaged during installation, precast contractor shall repair coating in field.

F. Clip angles, plates, and connection components for CMU wall to concrete elements shall be provided by miscellaneous metals contractor. General Contractor shall coordinate connections between miscellaneous metals contractor and CIP or P/C contractor as appropriate. Where coating is removed or damaged during installation, miscellaneous metals contractor shall repair coating in field.

IX. TESTING & INSPECTION NOTES

A. Following test and inspections shall be performed by an independent testing and inspection agency employed by design/build contractor and approved by Engineer and Building Official. Test and inspection reports shall be submitted for approval to Engineer and Building Official. Conform to requirements of IBC section 109 and 1704.

SPECIAL INSPECTIONS SCHEDULE

		REQUIRED VERIFICATION & INSPECTION	CONT	PERIODIC
A. CONCRETE CONSTRUCTION				
1.		Inspection of reinforcing steel, including prestressing tendons, and placing		X
2.		Inspection of reinforcing steel welding:		
	a.	Verification of weldability of reinforcing steel other than ASTM A706		X
	b.	Reinforcing steel resisting flexural and axial forces in intermediate and special moment frames, and boundary elements of special reinforced concrete shear walls	X	
	c.	Shear reinforcement	X	
	d.	Other reinforcing steel		X
	e.	Bumper wall reinforcing	X	
3.		Inspection of bolts to be installed in concrete prior to and during placement of concrete where allowable loads have been increased or where strength design is used	X	
4.		Inspection of anchors installed in hardened concrete		X
5.		Verifying use of required design mix		X
6.		Perform sampling and testing of concrete according to specifications	X	
7.		Inspection of concrete and shotcrete placement for proper application techniques	X	
8.		Inspection for maintenance of specified curing temperature and techniques		X
9.		Verification of in-situ concrete strength, prior to stressing of tendons in post-tensioned concrete and prior to removal of shores and forms from beams and structural slabs		X
10.		Inspect formwork for shape, location and dimensions of concrete member being formed		X
11.		Verify finish of concrete slabs and floors (see specification section 033000)		X
12.		Verify location and construction of pour strips and joints in concrete slabs and floors (see specification section 033000 and structural drawings)		X
B. PRECAST CONCRETE				
1.		Erection of precast concrete members		X
2.		Verification of precast member connections in accordance with structural drawings and precast construction (shop) drawings		X
C. STEEL CONSTRUCTION				
1.		Material verification of high-strength bolts, nuts, and washers:		
	a.	Identification markings to conform to ASTM standards specified in construction documents		X
	b.	Manufacturer's certificate of compliance required		X
2.		Inspection of high-strength bolting:		
	a.	Bearing-type connections		X
	b.	Slip-critical connections (see IBC 1704.3.3)	X	X
3.		Material verification of structural steel:		
	a.	Identification markings to conform to ASTM standards in approved construction documents		X
	b.	Manufacturer's certified mill test reports		X
4.		Material verification of weld filler materials:		
	a.	Identification markings to conform to AWS specification in approved construction documents		X
	b.	Manufacturer's certificate of compliance required		X
5.		Inspection of structural steel welding:		
	a.	Complete and partial penetration groove welds	X	
	b.	Multi-pass fillet welds	X	
	c.	Single-pass fillet welds > 5/16"	X	
	d.	Single-pass fillet welds ≤ 5/16"		X
	e.	Floor and deck welds		X
6.		Inspection of steel frame joint details for compliance with construction documents:		
	a.	Details such as bracing and stiffening		X
	b.	Member locations		X
	c.	Application of joint details at each connection		X
D. MASONRY CONSTRUCTION (SEE IBC SECTION 1704.5.2)				
1.		Verification of slump flow and VSI as delivered to the site for self-consolidating grout	X	
2.		Verification of masonry construction		
	a.	Proportions of site-prepared mortar		X
	b.	Construction of mortar joints		X
	c.	Location of reinforcement, connectors, and anchorages		X
3.		During construction the inspection program shall verify:		
	a.	Size and location of structural elements		X
	b.	Type, size, and location of anchors, including other details of anchorage of masonry to structural members, frames, or other construction		X
	c.	Specified size, grade, and type of reinforcement, anchor bolts, and anchorages		X
	d.	Preparation, construction and protection of masonry during cold weather (temperature below 40°F) or hot weather (temperature above 90°F)		X
4.		Prior to grouting, the following shall be verified to ensure compliance:		
	a.	Grout space is clean		X
	b.	Placement of reinforcement and connectors, and anchorages		X
	c.	Construction of mortar joints		X
5.		Preparation of any required grout specimens, mortar specimens and/or prisms shall be observed		X
E. SOILS				
1.		Verify materials below footings are adequate to achieve design bearing capacity		X
2.		Verify excavations are extended to proper depth and have reached proper material		X
3.		Perform classification and testing of controlled fill materials		X
4.		Verify use of proper materials, densities, and lift thicknesses during placement and compaction of controlled fill	X	
5.		Prior to placement of controlled fill, observe subgrade and verify that site has been prepared properly		X
F. RIGID INCLUSIONS				
1.		Verify element materials, sizes, and lengths comply with requirements.	X	
2.		Determine capacities of test elements and conduct additional load tests as required.	X	
3.		Observe driving operations and maintain complete and accurate records for each element.	X	
4.		Verify placement locations and plumbness, confirm type and size of hammer, record number of blows per foot of penetration, determine required penetrations to achieve design capacity, record tip and butt elevations, and document any damage to foundation element.	X	
G. GUARDRAIL STRANDS				
1.		Material verification of guardrail strands (see specification section 051617)		X
2.		Inspect placement of guardrail strands		X
3.		Verification of backstress to seat wedges at non-stressing ends.	X	
4.		Verification of specified stressing forces and backstress at stressing ends	X	
5.		Restoration of corrosion protection after back stressing		X
6.		Sealing of sleeves in column		X
H. MISCELLANEOUS ITEMS				
1.		Verify installation of expansion joints, traffic topping membranes, and joint sealants		X
2.		Verify attachment and/or bracing of miscellaneous items such as pipes, equipment, signs, bollards, etc.		X
3.		Verify fire retardant paint on telecom plywood.		X

UNCW
UNIVERSITY of NORTH CAROLINA WILMINGTON
601 S COLLEGE ROAD
WILMINGTON, NORTH CAROLINA 28403

PARKING DECK II AND SURFACE PARKING (DESIGN-BUILD)
SOUTH CAMPUS - 4965 RIEGEL ROAD

SCO ID NUMBER: 18-19226-01A
CODE: 41828
ITEM: 301

CONTRACTOR
Balfour Beatty Construction

DESIGNER
CLARKNEXSEN
1523 ELIZABETH AVENUE, SUITE 300
CHARLOTTE, NORTH CAROLINA 28204
704.377.8800
CLARK NEXSEN LICENSE NUMBER: C-1028

WALKER CONSULTANTS
13860 Ballantyne Corporate Place
Suite 140
Charlotte, NC 28277
T: 704.247.6230
www.walkerconsultants.com
NC License No. F-0518

McKIM&CREED
CIVIL ENGINEER
243 NORTH FRONT STREET
WILMINGTON, NORTH CAROLINA
28401
910.343.1048

PROFESSIONAL SEAL

NOT FOR CONSTRUCTION
NORTH CAROLINA PROFESSIONAL SEAL 028007 ENGINEER JOEY D. ROWLAND

SUBMITTAL
04/15/2019
CONSTRUCTION DOCUMENT SUBMITTAL 01

REVISIONS

KEY PLAN

SHEET
STRUCTURAL GENERAL NOTES

S-001

DESIGN: Designer
DRAWN: Author
REVIEW: Checker

CN PROJECT NUMBER

4/15/2019 5:34:39 PM
C:\Revit Projects\UNC Wilmington Deck II_r17_roy.grantham.rvt

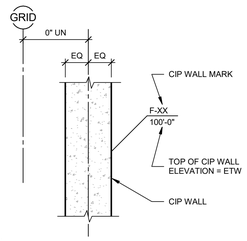

NOTE:
1. SEE CAST-IN-PLACE WALL SCHEDULE AND CAST-IN-PLACE WALL NOTES FOR ADDITIONAL INFORMATION

1 STRUCTURAL CIP WALL LEGEND

3/4" = 1'-0"

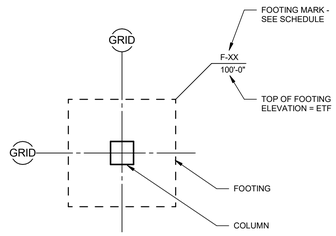

2 SPREAD FOOTING LEGEND

3/4" = 1'-0"

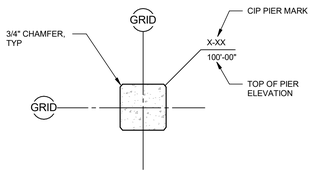

NOTE:
1. SEE CIP PIER SCHEDULE AND CIP PIER NOTES FOR ADDTIONAL INFORMATION.

3 STRUCTURAL FOUNDATION LEGEND FOR CIP PIER

3/4" = 1'-0"

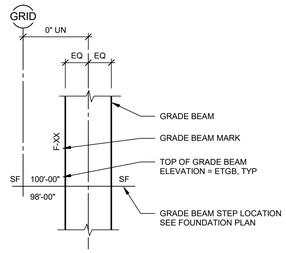

NOTE:
1. SEE GRADE BEAM SCHEDULE AND GRADE BEAM NOTES FOR ADDITIONAL INFORMATION.

4 STRUCTURAL GRADE BEAM LEGEND

3/4" = 1'-0"

ABBREVIATIONS

ABBRV	TERM
A/E	ARCHITECT/ENGINEER
AB	ANCHOR BOLT
ABBRV	ABBREVIATION
ACI	AMERICAN CONCRETE INSTITUTE
ADDM	ADDENDUM
AISC	AMERICAN INSTITUTE OF STEEL CONSTRUCTION
ALT	ALTERNATE
ALUM	ALUMINUM
ANSI	AMERICAN NATIONAL STANDARDS INSTITUTE
APPROX	APPROXIMATE
ARCH	ARCHITECT
ASCE	AMERICAN SOCIETY OF CIVIL ENGINEERS
ASI	ARCHITECT'S SUPPLEMENTAL INSTRUCTION
ASTM	AMERICAN SOCIETY FOR TESTING AND MATERIALS
AVG	AVERAGE
AWS	AMERICAN WELDING SOCIETY
B	BEAM
B PL	BASE PLATE
BC	BACK OF CURB
BC	BOLT CIRCLE
BLDG	BUILDING
BOS	BOTTOM OF STEEL
BOT	BOTTOM
BRG	BEARING
BRG PL	BEARING PLATE
BS	BOTH SIDES
BTWN	BETWEEN
C	C SHAPE
C TO C	CENTER TO CENTER
CAM	CAMBER
CANTIL	CANTILEVER
CD	CONSTRUCTION DOCUMENTS
CERT	CERTIFY
CG	CENTER OF GRAVITY
CHFR	CHAMFER
CIP	CAST-IN-PLACE
CJ	CONSTRUCTION JOINT
CJ	CONTROL JOINT
CL	CENTER LINE
CLR	CLEAR
CMU	CONCRETE MASONRY UNIT
COL	COLUMN
CONC	CONCRETE
CONN	CONNECT
CONN	CONNECTION
CONSTR	CONSTRUCTION
CONT	CONTINUE
CONT	CONTINUOUS
CONTR	CONTRACTOR
COORD	COORDINATE
CP	CONCRETE PIER
CRSI	CONCRETE REINFORCING STEEL INSTITUTE
CTR	CENTER
CU YD	CUBIC YARD
D	DEEP
D	DEPTH
DAT	DATUM
DBA	DEFORMED BAR ANCHOR
DD	DESIGN DEVELOPMENT
DEG	DEGREE
DET	DETAIL
DEV	DEVELOPMENT
DIA	DIAMETER
DIAG	DIAGONAL
DL	DEAD LOAD
DOC	DOCUMENT
DP	DRILLED PIER
DWG	DRAWING
E	MODULUS OF ELASTICITY
EA	EACH
EE	EACH END
EF	EACH FACE
EJ	EXPANSION JOINT
EL	ELEVATION
ELEV	ELEVATOR
ENGR	ENGINEER
EOS	EDGE OF SLAB
EQ	EQUAL
EQ	SEISMIC
EQUIP	EQUIPMENT
EQUIV	EQUIVALENT
ETC	AND SO FORTH
EW	EACH WAY
EW EF	EACH WAY EACH FACE
EWP	ELEVATION WORKING POINT
EXIST	EXISTING
EXP	EXPANSION
EXT	EXTERIOR
F	FAHRENHEIT
FD	FLOOR DRAIN
FDTN	FOUNDATION
FF	FAR FACE
FIN	FINISH
FIN FLR	FINISH FLOOR
FLG	FLANGE
FLR	FLOOR
FO	FINISHED OPENING
FS	FAR SIDE
FT	FEET
FT	FOOT
FT-K	FOOT-KIPS
FT-LB	FOOT-POUNDS
FUT	FUTURE
G	GIRDER
GA	GAGE
GALV	GALVANIZED
GALV STL	GALVANIZED STEEL
GC	GENERAL CONTRACTOR
GFRC	GLASS-FIBER-REINFORCED CONCRETE
GR	GRADE
GR BM	GRADE BEAM
H	HIGH
HC	HOLLOW CORE
HORIZ	HORIZONTAL
HP	HP-STEEL SECTION
HSS	HOLLOW STRUCTURAL STEEL SECTION
HST	HOIST
HT	HEIGHT
HVAC	HEATING, VENTILATING, AND AIR CONDITIONING
I	MOMENT OF INERTIA
IBC	INTERNATIONAL BUILDING CODE
ID	INSIDE DIAMETER
IF	INSIDE FACE
IN-K	INCH-KIPS
IN-LB	INCH-POUND
INFO	INFORMATION
INT	INTERIOR
INV	INVERT
INV EL	INVERT ELEVATION
ISO	ISOMETRIC
K	KIP(S)
KLF	KIPS PER LINEAL FOOT
KSF	KIPS PER SQUARE FOOT
KSI	KIPS PER SQUARE INCH
KWY	KEYWAY

ABBREVIATIONS

ABBRV	TERM
L	ANGLE
LAT	LATITUDE
LBS	POUND
LF	LINEAR FEET (FOOT)
LL	LIVE LOAD
LLH	LONG LEG HORIZONTAL
LLV	LONG LEG VERTICAL
LONG	LONGITUDINAL
LP	LIGHT POLE
LT GA	LIGHT GAGE
LT WT	LIGHTWEIGHT
LYR	LAYER
M	M-STEEL SHAPE
M	MOMENT
MAX	MAXIMUM
MECH	MECHANICAL
MECH RM	MECHANICAL ROOM
MFR	MANUFACTURER
MH	MANHOLE
MID	MIDDLE
MIN	MINIMUM
MISC	MISCELLANEOUS
MO	MASONRY OPENING
MT	MT-STEEL SHAPE
N	NORTH
NA	NOT APPLICABLE
NF	NEAR FACE
NIC	NOT IN CONTRACT
NO	NUMBER
NOM	NOMINAL
NS	NEAR SIDE
NSNM	NON-SHRINK NON-METALLIC
NTS	NOT TO SCALE
O/O	OUT TO OUT
OC	ON CENTER
OD	OUTSIDE DIAMETER
OF	OUTSIDE FACE
OPH	OPPOSITE HAND
OPNG	OPENING
OPP	OPPOSITE
ORIG	ORIGINAL
P	AXIAL LOAD
P/C	PRECAST
P/T	POST TENSIONED
PC	PILE CAP
PCF	POUNDS PER CUBIC FOOT
PCI	PRECAST/PRESTRESSED CONCRETE INSTITUTE
PL	PROPERTY LINE
PLF	POUNDS PER LINEAR FOOT
PRCST	PRECAST
R	RADIUS
RC	REINFORCED CONCRETE
RD	ROOF DRAIN
REBAR	REINFORCING STEEL BARS
REF	REFERENCE
REINF	REINFORCEMENT
REM	REMAINDER
REM	REMAINING
REQD	REQUIRED
REV	REVISION
RO	ROUGH OPENING
ROW	RIGHT OF WAY
S	SECTION MODULUS
SCHED	SCHEDULE
SDI	STEEL DECK INSTITUTE
SE	STRUCTURAL ENGINEER
SECT	SECTION
SF	SQUARE FOOT (FEET)
SF	STEP FOOTING
SHT	SHEET
SIM	SIMILAR
SJI	STEEL JOIST INSTITUTE
SOG	SLAB ON GROUND
SPEC	SPECIFICATION
STAG	STAGGERED
STD	STANDARD
STIF	STIFFENER
STIR	STIRRUP
STL PL	STEEL PLATE
STN STL	STAINLESS STEEL
STRUCT	STRUCTURAL
SYM	SYMMETRICAL
SYS	SYSTEM
T	TORSION
T&B	TOP AND BOTTOM
TD	TRENCH DRAIN
TEMP	TEMPORARY
TFF	TOP OF FINISH FLOOR
THRU	THROUGH
TO CP	TOP OF CONCRETE PIER
TO DP	TOP OF DRILLED PIER
TO FDTN	TOP OF FOUNDATION
TO P/C	TOP OF PRECAST
TO PC	TOP OF PILE CAP
TOB	TOP OF BEAM
TOC	TOP OF CONCRETE
TOF	TOP OF FOOTING
TOF	TOP OF FOUNDATION
TOS	TOP OF SLAB
TOS	TOP OF STEEL
TOW	TOP OF WALL
TRANS	TRANSVERSE
TS	TUBE STEEL
TYP	TYPICAL
UL	UNDERWRITERS LABORATORIES
ULT	ULTIMATE
UN	UNLESS NOTED
UNIF	UNIFORM
UNO	UNLESS NOTED OTHERWISE
V	SHEAR
VAR	VARIES
VERT	VERTICAL
VIF	VERIFY IN FIELD
VRFY	VERIFY
W	W-STEEL SHAPE
W	WIDE
W/	WITH
W/O	WITHOUT
WF	WIDE FLANGE
WL	WIND LOAD
WP	WORKING POINT
WT	WEIGHT
WT	WT-STEEL SHAPE
WWR	WELDED WIRE REINFORCEMENT
X BRACE	CROSS BRACE
YD	YARD
Z	MODULUS OF SECTION

STRUCTURAL GENERAL LEGEND

- CIP
- CIP (PLAN CUT)
- PRECAST CONCRETE
- CMU
- CONCRETE WASH ON PRECAST CONCRETE
- CIP POUR STRIP
- TRAFFIC TOPPING
- (1) SHEET NOTE

UNIVERSITY of NORTH CAROLINA WILMINGTON
601 S COLLEGE ROAD
WILMINGTON, NORTH CAROLINA 28403

PARKING DECK II AND SURFACE PARKING (DESIGN-BUILD)
SOUTH CAMPUS - 4965 RIEGEL ROAD

SCO ID NUMBER: 18-19226-01A
CODE: 41828
ITEM: 301

CONTRACTOR
Balfour Beatty Construction

DESIGNER
CLARKNEXSEN
1523 ELIZABETH AVENUE, SUITE 300
CHARLOTTE, NORTH CAROLINA 28204
704.377.8800
CLARK NEXSEN LICENSE NUMBER: C-1028

WALKER CONSULTANTS
13860 Ballantyne Corporate Place
Suite 140
Charlotte, NC 28277
T: 704.247.6230
www.walkerconsultants.com
NC License No. F-0518

McKIM&CREED
CIVIL ENGINEER
243 NORTH FRONT STREET
WILMINGTON, NORTH CAROLINA
28401
910.343.1048

PROFESSIONAL SEAL
NOT FOR CONSTRUCTION
NORTH CAROLINA PROFESSIONAL SEAL 028007 ENGINEER JOEY D. ROWLAND

SUBMITTAL
04/15/2019
CONSTRUCTION DOCUMENT SUBMITTAL 01

REVISIONS

KEY PLAN

SHEET
ABBREVIATIONS AND LEGENDS

S-002

DESIGN: Designer
DRAWN: Author
REVIEW: Checker

CN PROJECT NUMBER

4/15/2019 5:34:42 PM
C:\Revit Projects\UNC Wilmington Deck II_r17_roy.grantham.rvt

SPREAD FOOTING SCHEDULE								
	SIZE			REINFORCING				
				LONGITUDINAL		TRANSVERSE		
MARK	LENGTH	WIDTH	DEPTH	BOTTOM	TOP	BOTTOM	TOP	REMARKS
F1	16' - 6"	11' - 6"	2' - 6"	(12) - #10		(17) - #10		
F2	13' - 6"	13' - 6"	2' - 9"	(14) - #9		(14) - #9		
F3	12' - 6"	12' - 6"	2' - 6"	(13) - #9		(13) - #9		
F4	14' - 6"	14' - 6"	2' - 9"	(15) - #10		(15) - #10		
F5	16' - 6"	16' - 6"	3' - 8"	(17) - #10		(17) - #9		
F6	17' - 6"	8' - 0"	2' - 0"	(7) - #9		(18) - #9		
F7	36' - 6"	18' - 6"	2' - 6"	(19) - #11	(19) - #5	(37) - #11	(37) - #5	
F8	39' - 6"	20' - 9"	3' - 0"	(28) - #9	(28) - #5	(53) - #9	(53) - #5	
F9	SEE PLAN	SEE PLAN	2' - 6"	#10 @ 8" OC	#10 @ 8" OC	#10 @ 8" OC	#10 @ 8" OC	

SPREAD FOOTING SCHEDULE NOTES:

1. ALL REINFORCEMENT SHALL BE PLACED AT EVEN SPACING UNO.
2. FOOTINGS ARE CENTERED ON GRID LINES UNO.
3. MINIMUM SOIL ALLOWABL BEARING PRESSURE SHALL BE 6000 PSF AS VERIFIED BY TESTING AGENCY. IF REQUIRED BY GEOTECHNICAL ENGINEER, UNDERCUT SUBGRADE AND REPLACE WITH STRUCTURAL FILL OR LEAN CONCRETE.
4. PLACE LONGITUDINAL BARS BELOW TRANSVERSE BARS FOR BOTTOM BARS.

STRIP FOOTING SCHEDULE							
SIZE			REINFORCING				
			LONGITUDINAL		TRANSVERSE		
MARK	WIDTH	DEPTH	BOTTOM	TOP	BOTTOM	TOP	REMARKS
SF-1	6' - 6"	2' - 0"	(7) - #5	(7) - #5	#7 @ 12" OC	#7 @ 12" OC	
SF-2	5' - 8"	2' - 0"	(6) - #5	(6) - #5	#5 @ 12" OC	#5 @ 12" OC	
SF-3	2' - 8"	1' - 6"	(4) - #5		#5 @ 12" OC		

STRIP FOOTING SCHEDULE NOTES:

1. ALL REINFORCEMENT SHALL BE PLACED AT EVEN SPACING UNO.
2. SEE S/S-510 FOR STRIP FOOTING CONSTRUCTION JOINT.
3. MINIMUM SOIL BEARING CAPACITY SHALL BE 6000 PSF AS VERIFIED BY TESTING AGENCY. IF REQUIRED BY GEOTECHNICAL ENGINEER, UNDERCUT SUBGRADE AND REPLACE WITH STRUCTURAL FILL OR LEAN CONCRETE. CMU FOOTINGS ARE NON-LOAD BEARING AND ARE NOT REQUIRED TO HAVE A 6000 PSF MINIMUM SOIL BEARING CAPACITY.
4. FULLY DEVELOP STRIP FOOTINGS INTO ADJACENT FOOTINGS. SEE S-690 FOR DEVELOPMENT LENGTHS.
5. PLACE LONGITUDINAL BARS BELOW TRANSVERSE BARS FOR BOTTOM BARS.
6. SEE 2/S-510 FOR STEP FOOTING DETAIL.

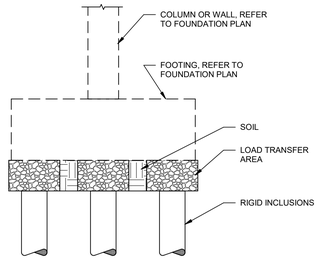

NOTE:
1. RIGID INCLUSIONS SYSTEM TO BE A DELEGATED DESIGN BY THE GROUND IMPROVEMENT SUBCONTRACTOR.
2. RIGID INCLUSIONS SYSTEM TO PROVIDE 6000 PSF MIN BEARING FOR FOOTINGS. FOR BIDDING PURPOSES ASSUME ALL LOAD BEARING FOOTINGS REQUIRE 6000 PSF UNDER ENTIRE FOOTING
3. DIAMETER OF LOAD TRANSFER AREA AROUND EACH RIGID INCLUSION SHALL BE AT LEAST 2'DIA. OF THE ASSOCIATED RIGID INCLUSION.

2 SOIL IMPROVEMENT DETAIL

1/2" = 1'-0"

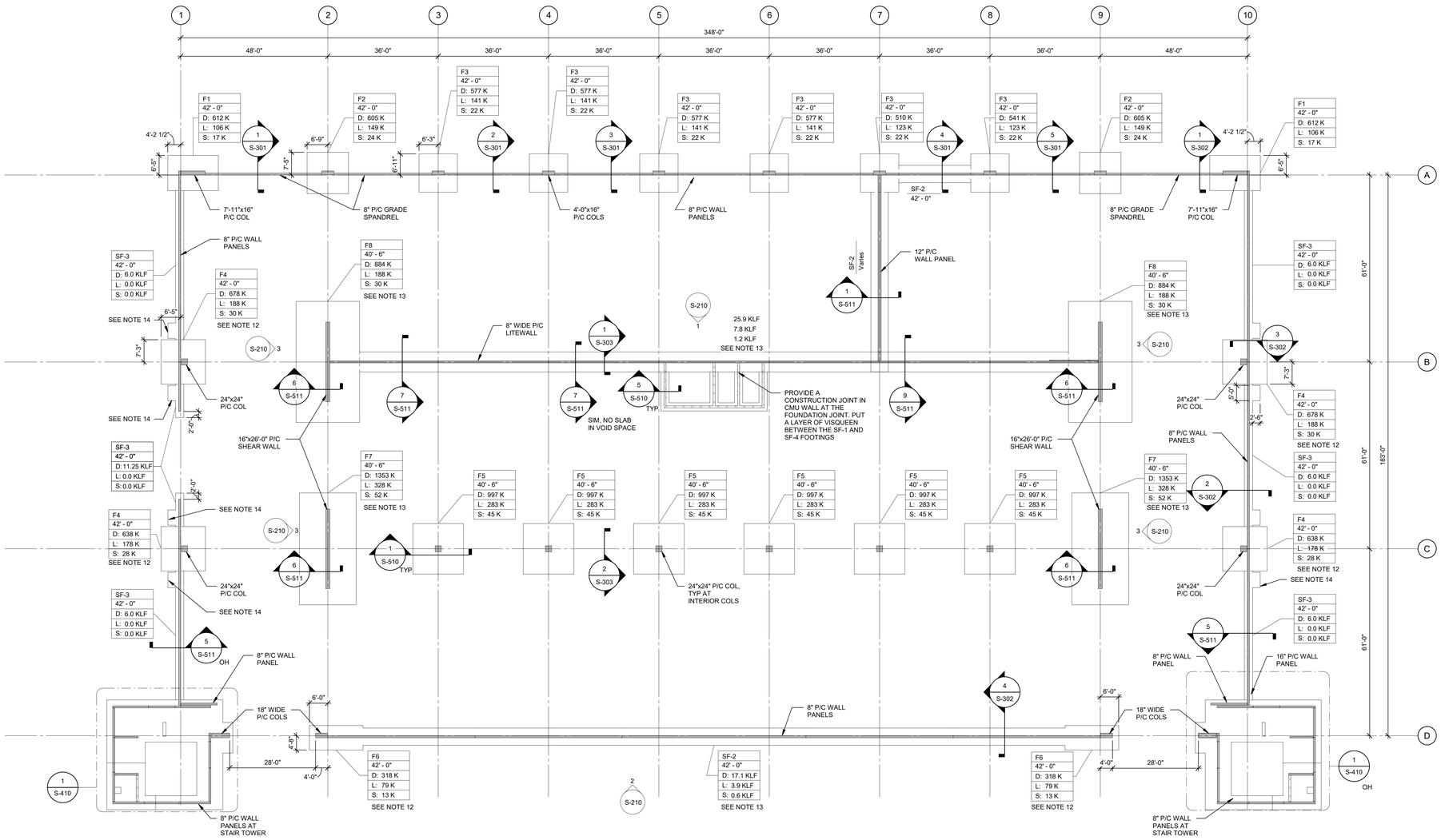

1 FOUNDATION PLAN

1/16" = 1'-0"

SHEET NOTES

REFERENCES:

1. GENERAL NOTES S-001
2. PRECAST COLUMN SCHEDULE S-100
3. TYPICAL DETAILS S-501
4. ENLARGED PLANS S-400 SERIES
5. FOUNDATION DETAILS S-510
6. CIP FOOTING TYPICAL DETAILS S-510
7. LAP SPLICE SCHEDULE S-650

8. REFER TO GENERAL NOTES FOR FOUNDATION INFORMATION AND SUB-GRADE PREPARATION AND DRAINS BEHIND RETAINING WALLS.

NOTES:

1. PROVIDE 3" CLEAR COVER FOR ALL BOTTOM REINFORCEMENT AND 2" CLEAR COVER FOR ALL TOP REINFORCEMENT, UNLESS NOTED.
2. AT LOCATIONS WHERE PRECAST WALLS ARE SUPPORTED ON FOUNDATIONS, PROVIDE EMBEDDED PLATES IN FOUNDATIONS, COORDINATE WITH PRECAST SUPPLIER. SEE S-524.
3. ANCHOR BOLTS, PLATES WITH WELDED ANCHORS, REINFORCING BAR CAGES WITH NMB SPLICES (OR SIMILAR) OR ANY OTHER CONNECTION MATERIALS THAT CONNECT THE PRECAST CONCRETE MEMBERS TO THE CIP CONCRETE FOUNDATIONS ARE TO BE SUPPLIED BY THE PRECAST SUPPLIER AND INSTALLED BY THE GENERAL CONTRACTOR. WARNING TO GENERAL CONTRACTOR: COORDINATE WITH PRECAST SUPPLIER TO FULLY UNDERSTAND THE LARGE MAGNITUDE OF THE EMBEDS TO BE INSTALLED AND THE VERY TIGHT TOLERANCES REQUIRED!
4. THE GENERAL CONTRACTOR IS RESPONSIBLE FOR THE DESIGN AND CONSTRUCTION OF ALL TEMPORARY EXCAVATION BRACING, SHEETING AND SHORING.
5. COORDINATE PENETRATIONS IN CAST-IN-PLACE & PRECAST MEMBERS WITH MEP AND CIVIL DRAWINGS, SHOW PENETRATIONS ON ALL SHOP DRAWINGS. SEE DETAILS
6. FOR UTIL11/S-501AR FOUNDATIONS, SEE
7. SEE CIVIL DRAWINGS FOR EXTERIOR GRA4/S-510 UTILITIES, ADJACENT STRUCTURES AND PROPERTY LINES. NOTIFY ENGINEER IN WRITING OF ANY CONFLICTS IMMEDIATELY.
8. VERIFY ALL DIMENSIONS WITH ARCHITECTURAL DRAWINGS.
9. SEE DRAWING S-101 FOR GRADE SLAB AND SLAB SUBGRADE INFORMATION.
10. FOR ANCHOR BOLT REQUIREMENTS, SEE & 1/S-525
11. 0/S-525ACTOR TO PROTECT SUBGRADE FROM DAMAGE DUE TO WEATHER.
12. LOADS SHOWN INCLUDE COLUMN LOADS ONLY. WALL LOADS NEED TO BE INCLUDED SEPARATELY.
13. WALL(S) HAVE ADDITIONAL CONTROLLING SEISMIC REVERSIBLE OVERTURNING MOMENTS. GROSS MOMENTS FOR WALL(S) ARE:
    - 36' WALL(S) ALONG GRID B/2-9 = 6,600 KIP-FT
    - 26' WALLS ALONG B/2, B/9, C/2, & C/9 = 18,500 KIP-FT
    - 48' WALL(S) ALONG GRID D/2-9 = 4,700 KIP-FT
    - 60' WALL(S) ALONG GRID D/2-9 = 13,000 KIP-FT
14. EXTEND SF-3. USE SAME REINFORCEMENT SIZE AND SPACING. DEAD LOAD IS 27 KIPS.

LEGEND

- CIP
- PRECAST CONCRETE
- CMU
- STEP

UNCW
UNIVERSITY of NORTH CAROLINA WILMINGTON
601 S COLLEGE ROAD
WILMINGTON, NORTH CAROLINA 28403

PARKING DECK II AND SURFACE PARKING (DESIGN-BUILD)
SOUTH CAMPUS - 4965 RIEGEL ROAD

SCO ID NUMBER: 18-19226-01A
CODE: 41828
ITEM: 301

CONTRACTOR
Balfour Beatty Construction

DESIGNER
CLARKNEXSEN
1523 ELIZABETH AVENUE, SUITE 300
CHARLOTTE, NORTH CAROLINA 28204
704.377.8800
CLARK NEXSEN LICENSE NUMBER: C-1028

WALKER CONSULTANTS
13860 Ballantyne Corporate Place
Suite 140
Charlotte, NC 28277
T: 704.247.6230
www.walkerconsultants.com
NC License No. F-0518

McKIM&CREED
CIVIL ENGINEER
243 NORTH FRONT STREET
WILMINGTON, NORTH CAROLINA
28401
910.343.1048

PROFESSIONAL SEAL

NOT FOR CONSTRUCTION
NORTH CAROLINA PROFESSIONAL SEAL 028007 ENGINEER JOEY D. ROWLAND

SUBMITTAL
04/15/2019
CONSTRUCTION DOCUMENT SUBMITTAL 01

REVISIONS

KEY PLAN

SHEET
FOUNDATION PLAN

S-100

DESIGN: Designer
DRAWN: Author
REVIEW: Checker

CN PROJECT NUMBER

4/15/2019 5:34:45 PM
C:\Revit Projects\UNCW Wilmington Deck II_r17_roy grantham.rvt

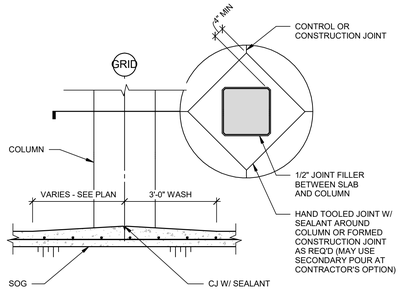

4 GRADE SLAB/COLUMN DETAIL
NTS

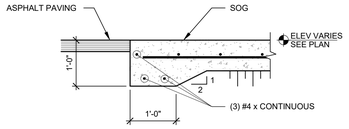

3 EDGE OF SLAB DETAIL
NTS

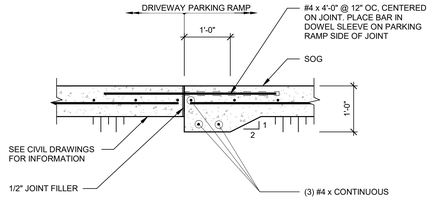

2 EDGE OF SLAB DETAIL
NTS

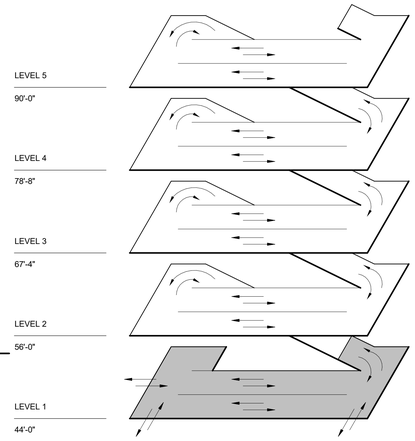

ISOMETRIC

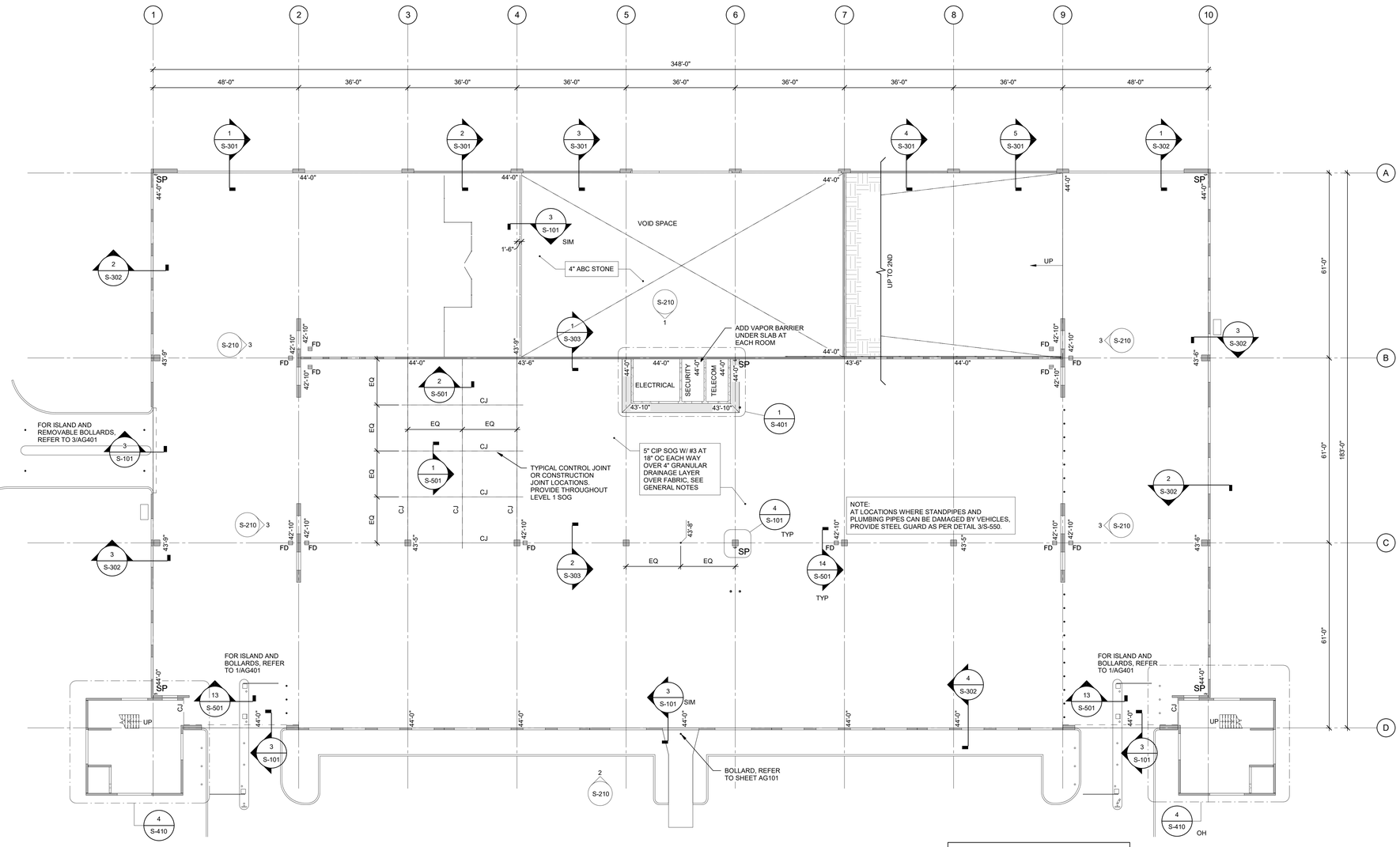

1 LEVEL 1 PLAN
1/16" = 1'-0"

IT SHALL BE THE CONTRACTOR'S RESPONSIBILITY TO VERIFY THAT THERE IS A MINIMUM OF 8'-4" HEADROOM BETWEEN ALL DRIVING SURFACES AND OVERHEAD BEAMS PRIOR TO PLACING CONCRETE.

SHEET NOTES

REFERENCES:

1.	GENERAL NOTES.	S-001
2.	TYPICAL DETAILS	S-501
3.	FOUNDATION INFORMATION	S-100
4.	TOP OF CIP WALLS	S-100
5.	PRECAST COLUMN SCHEDULE	S-100
6.	ENLARGED PLANS	S-400 SERIES
7.	LAP SPLICE SCHEDULE	S-650

NOTES:

1. REFER TO SHEET S-001 FOR GENERAL NOTES.
2. REFER TO CIVIL DRAWINGS FOR EXTERIOR GRADE ELEVATIONS.
3. REFER TO ARCHITECTURAL DRAWINGS FOR ENTRY / EXIT PLANS.
4. REFER TO "S-400 & A-400" SERIES DRAWINGS FOR STAIR AND STAIR / ELEVATOR PLANS, ELEVATIONS AND SECTIONS.
5. REFER TO PLUMBING DRAWINGS FOR FLOOR DRAIN LOCATIONS AND DETAILS.
6. CONCRETE INTERIOR SLAB ON GROUND SHALL BE 5" THICK AND REINFORCED WITH #3 @ 18" OC EW, PLACED 2" CLEAR FROM TOP OF SLAB. SLAB SHALL BE PLACED ON A MINIMUM 4" THICK GRANULAR DRAINAGE LAYER. REFER TO GENERAL NOTES SECTIONS II.H AND II.I FOR SUBGRADE COMPACTION AND DRAINAGE LAYER INFORMATION.
7. PROVIDE 1/2" JOINT FILLER AT GRADE SLAB AROUND COLUMNS, TYPICAL.
8. USE STRAIGHT LINE INTERPOLATION FOR FLOOR ELEVATION BETWEEN THOSE INDICATED.
9. PROVIDE CONSTRUCTION OR CONTROL JOINTS IN CIP WALLS PER DETAILS ON S-501 TO MATCH JOINT IN SLAB-ON-GROUND.
10. PROVIDE CORNER REINFORCEMENT FOR SLABS PER DETAILS ON S-501.

LEGEND

- CIP
- PRECAST CONCRETE
- CMU
- CONCRETE WASH / TOPPING
- CIP POUR STRIP
- TRAFFIC TOPPING

UNCW
UNIVERSITY of NORTH CAROLINA WILMINGTON
601 S COLLEGE ROAD
WILMINGTON, NORTH CAROLINA 28403

PARKING DECK II AND SURFACE PARKING (DESIGN-BUILD)
SOUTH CAMPUS - 4965 RIEGEL ROAD

SCO ID NUMBER: 18-19226-01A
CODE: 41828
ITEM: 301

CONTRACTOR
Balfour Beatty Construction

DESIGNER
CLARKNEXSEN
1523 ELIZABETH AVENUE, SUITE 300
CHARLOTTE, NORTH CAROLINA 28204
704.377.8800
CLARK NEXSEN LICENSE NUMBER: C-1028

WALKER CONSULTANTS
13860 Ballantyne Corporate Place
Suite 140
Charlotte, NC 28277
T: 704.247.6230
www.walkerconsultants.com
NC License No. F-0518

McKIM&CREED
CIVIL ENGINEER
243 NORTH FRONT STREET
WILMINGTON, NORTH CAROLINA
28401
910.343.1048

PROFESSIONAL SEAL
NOT FOR CONSTRUCTION
NORTH CAROLINA PROFESSIONAL SEAL 028007 ENGINEER JOSEY D. ROWLAND

SUBMITTAL
04/15/2019
CONSTRUCTION DOCUMENT SUBMITTAL 01

REVISIONS

KEY PLAN

SHEET
LEVEL 1 PLAN

S-101

DESIGN: Designer
DRAWN: Author
REVIEW: Checker

CN PROJECT NUMBER

4/15/2019 5:34:48 PM
C:\Revit Projects\UNC Wilmington Deck II_r17_cxy.grantham.rvt

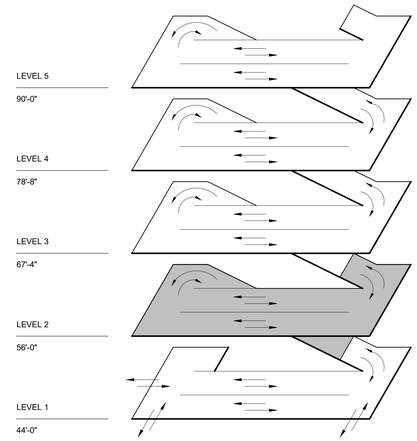

ISOMETRIC

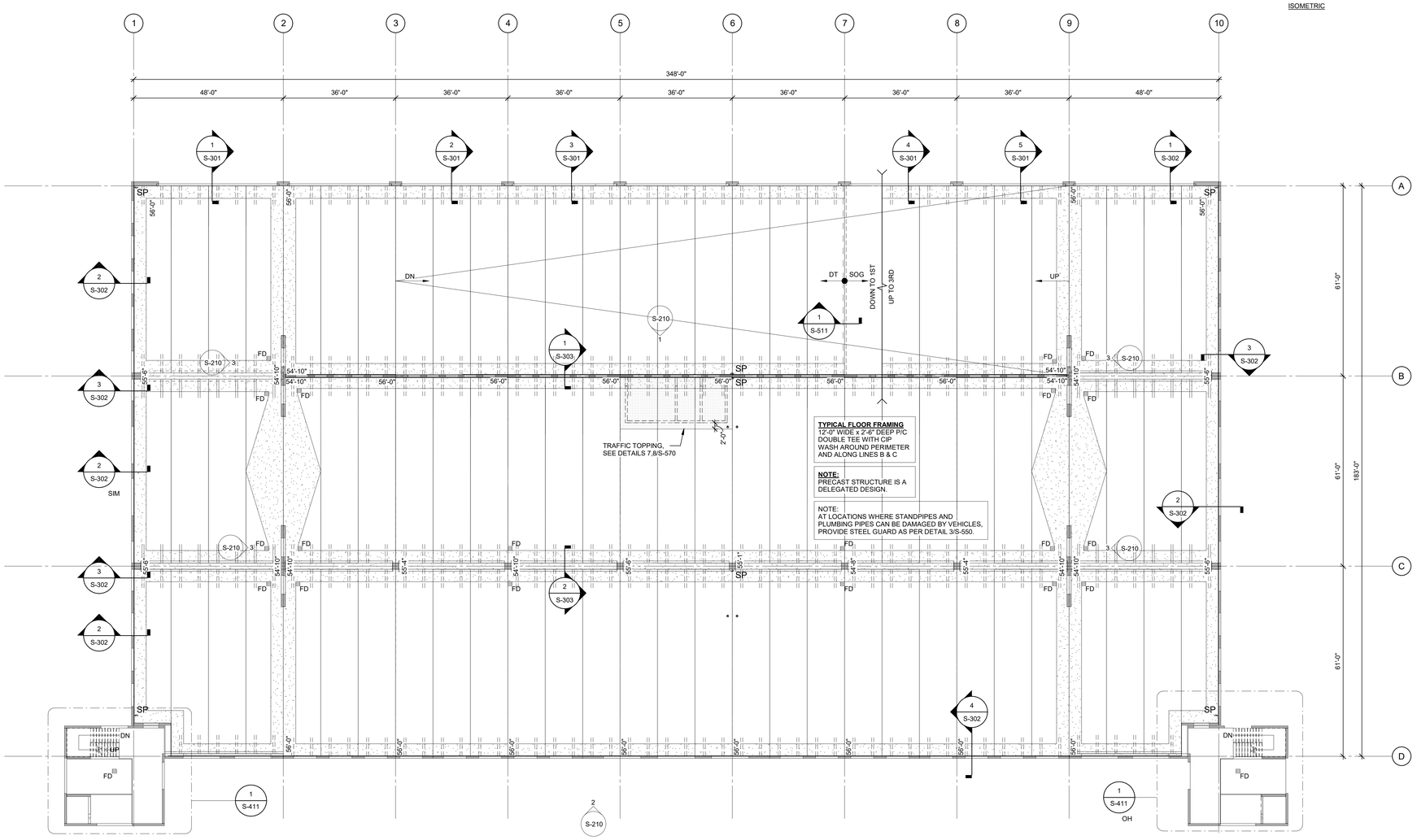

1 LEVEL 2 PLAN
1/16" = 1'-0"

IT SHALL BE THE CONTRACTOR'S RESPONSIBILITY TO VERIFY THAT THERE IS A MINIMUM OF 7'-8" HEADROOM BETWEEN ALL DRIVING SURFACES AND OVERHEAD BEAMS PRIOR TO PLACING CONCRETE.

SHEET NOTES

1. SEE SHEET S-103 FOR TYPICAL SHEET NOTES AND LOCATIONS OF TYPICAL DETAIL REFERENCES (UNLESS NOTED).

LEGEND

- CIP
- PRECAST CONCRETE
- CMU
- CONCRETE WASH / TOPPING
- CIP POUR STRIP
- TRAFFIC TOPPING

UNCW
UNIVERSITY of NORTH CAROLINA WILMINGTON
601 S COLLEGE ROAD
WILMINGTON, NORTH CAROLINA 28403

PARKING DECK II AND SURFACE PARKING (DESIGN-BUILD)
SOUTH CAMPUS - 4965 RIEGEL ROAD

SCO ID NUMBER: 18-19226-01A
CODE: 41828
ITEM: 301

CONTRACTOR
Balfour Beatty Construction

DESIGNER
CLARKNEXSEN
1523 ELIZABETH AVENUE, SUITE 300
CHARLOTTE, NORTH CAROLINA 28204
704.377.8800
CLARK NEXSEN LICENSE NUMBER: C-1028

WALKER CONSULTANTS
13860 Ballantyne Corporate Place
Suite 140
Charlotte, NC 28277
T: 704.247.6230
www.walkerconsultants.com
NC License No. F-0518

McKIM&CREED
CIVIL ENGINEER
243 NORTH FRONT STREET
WILMINGTON, NORTH CAROLINA
28401
910.343.1048

PROFESSIONAL SEAL
NOT FOR CONSTRUCTION
NORTH CAROLINA PROFESSIONAL SEAL 028007 ENGINEER JOEY D. ROWLAND

SUBMITTAL
04/15/2019
CONSTRUCTION DOCUMENT SUBMITTAL 01

REVISIONS

KEY PLAN

SHEET
LEVEL 2 PLAN

S-102

DESIGN: Designer
DRAWN: Author
REVIEW: Checker

CN PROJECT NUMBER

4/15/2019 5:34:50 PM
C:\Revit Projects\UNC-Wilmington Deck II_v17_roy.grantham.rvt

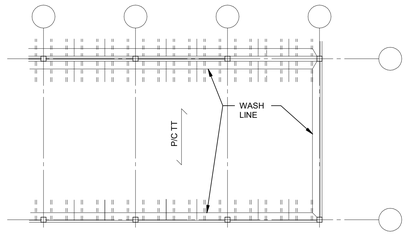

2 TYPICAL BAY PLAN
1/16" = 1'-0"

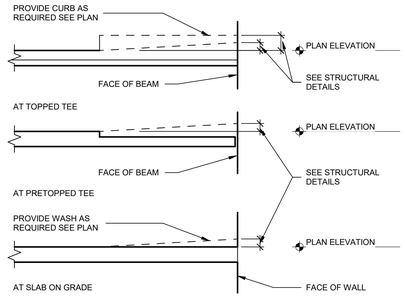

ARCHITECTURAL / STRUCTURAL PLAN ELEVATION KEY
NTS

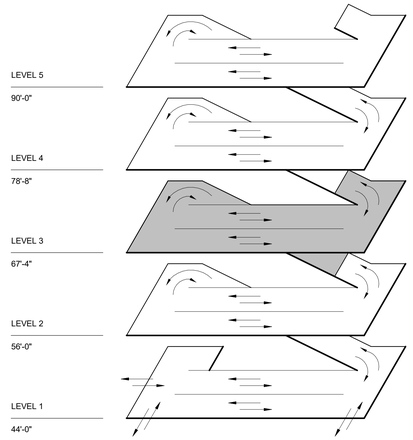

ISOMETRIC

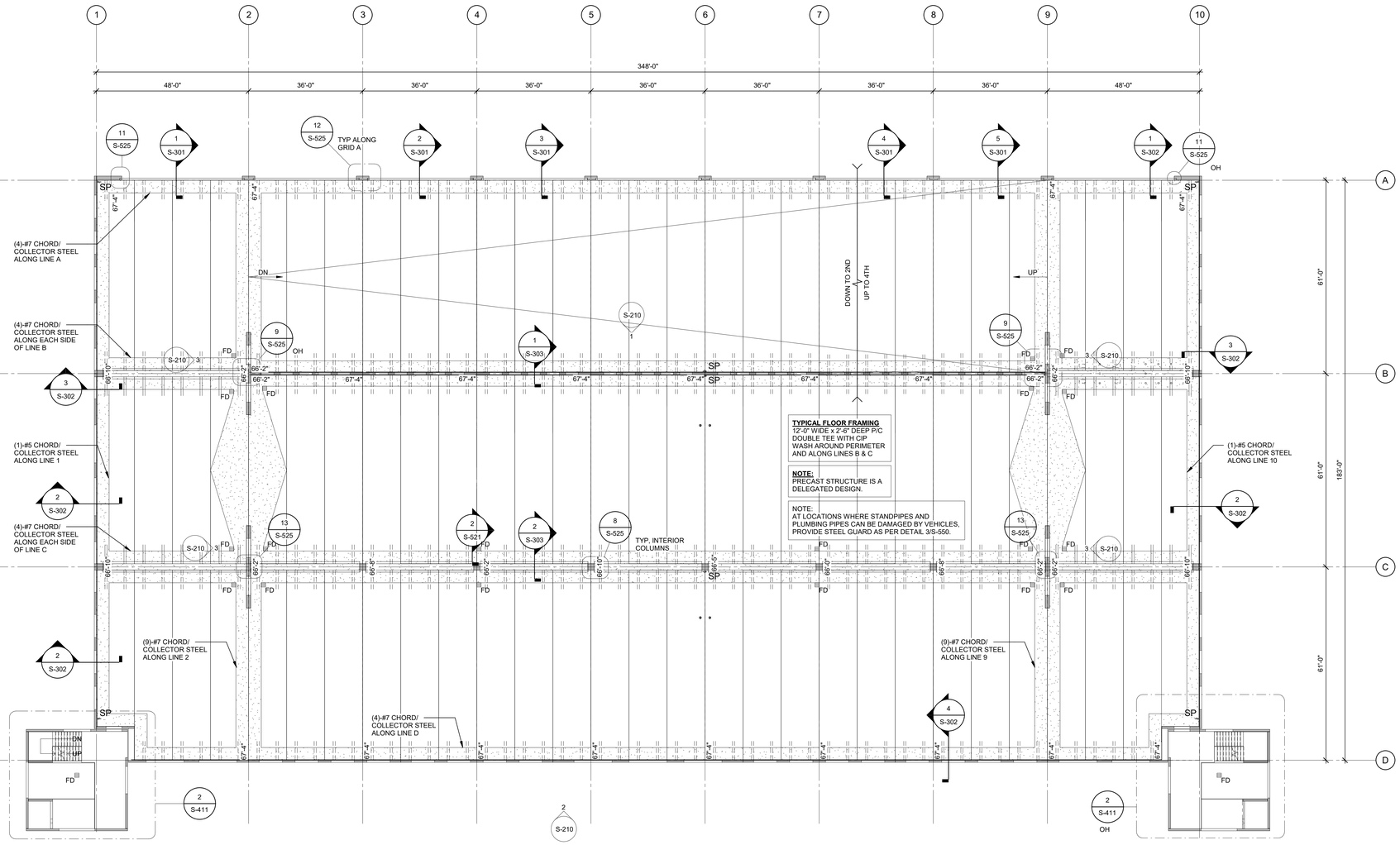

1 LEVEL 3 PLAN
1/16" = 1'-0"

IT SHALL BE THE CONTRACTOR'S RESPONSIBILITY TO VERIFY THAT THERE IS A MINIMUM OF 7'-8" HEADROOM BETWEEN ALL DRIVING SURFACES AND OVERHEAD BEAMS PRIOR TO PLACING CONCRETE.

SHEET NOTES

REFERENCES:

1. GENERAL NOTES. S-001
2. TYPICAL DETAILS S-501
3. PRECAST COLUMN SCHEDULE S-100
4. PRECAST STRUCTURAL WALL ELEVATIONS S-200 SERIES
5. ENLARGED PLANS S-400 SERIES
6. PRECAST BEAM DETAILS, SCHEDULE & NOTES S-520
7. PRECAST TEE DETAILS & NOTES S-521
8. PRECAST COLUMN DETAILS S-525
9. LAP SPLICE SCHEDULE S-650

NOTES:

1. USE STRAIGHT LINE INTERPOLATION FOR FLOOR ELEVATION BETWEEN THOSE INDICATED.
2. PROVIDE TOOLED AND SEALED CONTROL JOINTS IN ALL CIP TOPPING DIRECTLY OVER PRECAST JOINTS, UNO.
3. REFER TO ELECTRICAL DRAWINGS FOR LIGHT FIXTURE LOCATIONS & INFORMATION.
4. DETAIL CUTS AND INFORMATION SHOWN ON THIS SHEET ARE TYPICAL FOR SUPPORTED LEVELS, UNLESS NOTED OTHERWISE.
5. USE STRAIGHT LINE INTERPOLATION FOR FLOOR ELEVATION BETWEEN THOSE INDICATED.
6. SEE ISOMETRIC FOR DATUM. ELEVATIONS DO NOT INCLUDE WASH HEIGHT. SEE 3/S-103.
7. TOOL JOINTS IN CIP TOPPING OVER ALL PRECAST JOINTS.
8. SEE DETAILS 2, 3, 4, & 5/S-570 FOR TYPICAL SEALANT LOCATIONS.

LEGEND

- CIP
- PRECAST CONCRETE
- CMU
- CONCRETE WASH / TOPPING
- CIP POUR STRIP
- TRAFFIC TOPPING

UNCW
UNIVERSITY of NORTH CAROLINA WILMINGTON
601 S COLLEGE ROAD
WILMINGTON, NORTH CAROLINA 28403

PARKING DECK II AND SURFACE PARKING (DESIGN-BUILD)
SOUTH CAMPUS - 4965 RIEGEL ROAD

SCO ID NUMBER: 18-19226-01A
CODE: 41828
ITEM: 301

CONTRACTOR
Balfour Beatty Construction

DESIGNER
CLARKNEXSEN
1523 ELIZABETH AVENUE, SUITE 300
CHARLOTTE, NORTH CAROLINA 28204
704.377.8800
CLARK NEXSEN LICENSE NUMBER: C-1028

WALKER CONSULTANTS
13860 Ballantyne Corporate Place
Suite 140
Charlotte, NC 28277
T: 704.247.6230
www.walkerconsultants.com
NC License No. F-0518

McKIM&CREED
CIVIL ENGINEER
243 NORTH FRONT STREET
WILMINGTON, NORTH CAROLINA
28401
910.343.1048

PROFESSIONAL SEAL
NOT FOR CONSTRUCTION
NORTH CAROLINA PROFESSIONAL SEAL 028007 ENGINEER JOSEY D. ROWLAND

SUBMITTAL
04/15/2019
CONSTRUCTION DOCUMENT SUBMITTAL 01

REVISIONS

KEY PLAN

SHEET
LEVEL 3 PLAN

S-103

DESIGN: Designer
DRAWN: Author
REVIEW: Checker

CN PROJECT NUMBER

4/15/2019 5:34:32 PM
C:\Revit Projects\UNC Wilmington Deck II_r17_csy.grantham.rvt

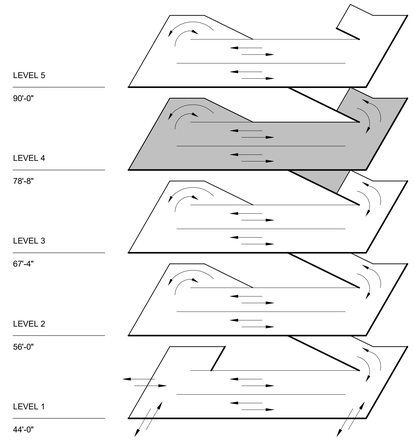

ISOMETRIC

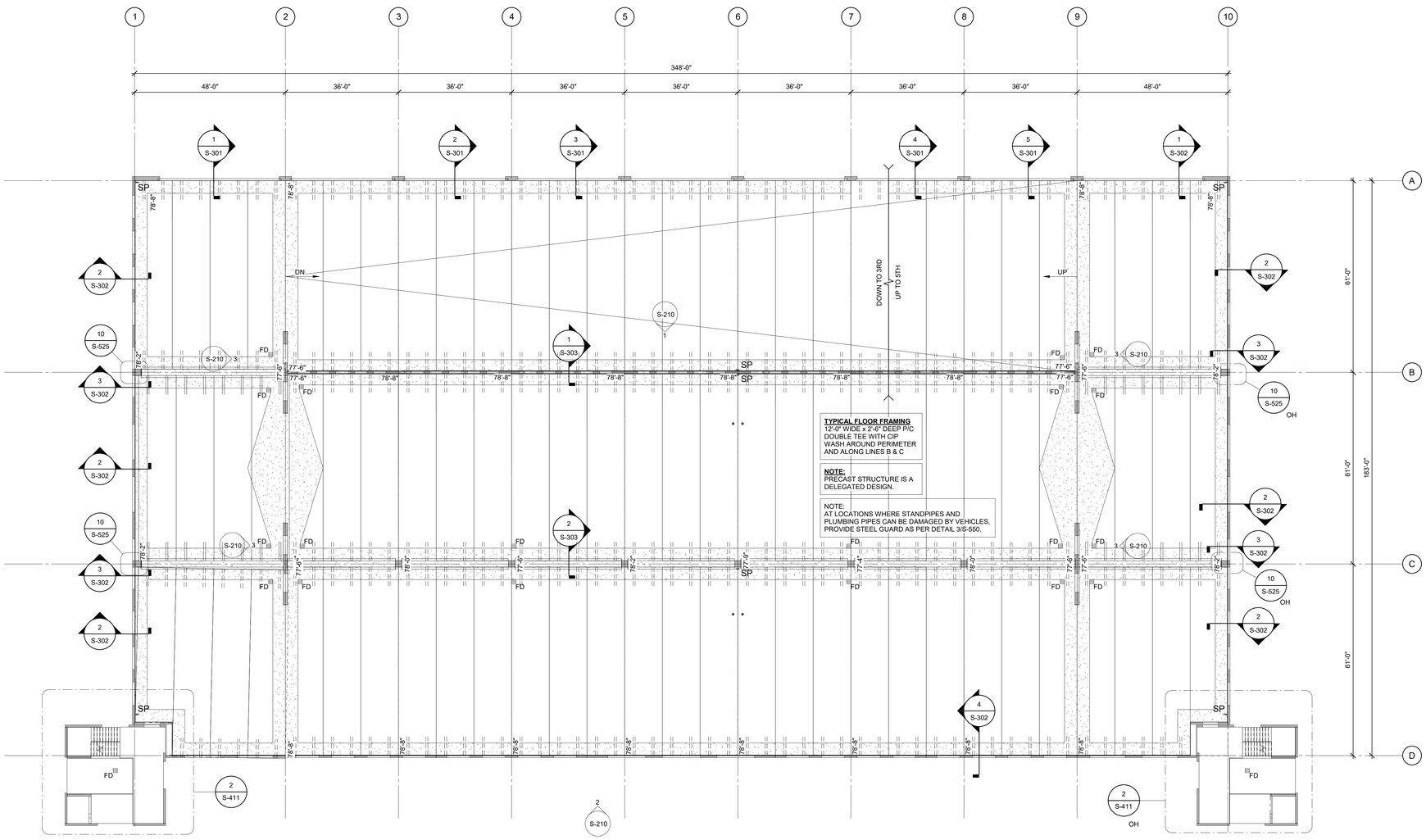

1 LEVEL 4 PLAN

1/16" = 1'-0"

IT SHALL BE THE CONTRACTOR'S RESPONSIBILITY TO VERIFY THAT THERE IS A MINIMUM OF 7'-8" HEADROOM BETWEEN ALL DRIVING SURFACES AND OVERHEAD BEAMS PRIOR TO PLACING CONCRETE.

SHEET NOTES

1. SEE SHEET S-103 FOR TYPICAL SHEET NOTES AND LOCATIONS OF TYPICAL DETAIL REFERENCES (UNLESS NOTED).

LEGEND

- CIP
- PRECAST CONCRETE
- CMU
- CONCRETE WASH / TOPPING
- CIP POUR STRIP
- TRAFFIC TOPPING

UNCW
UNIVERSITY of NORTH CAROLINA WILMINGTON
601 S COLLEGE ROAD
WILMINGTON, NORTH CAROLINA 28403

PARKING DECK II AND SURFACE PARKING (DESIGN-BUILD)
SOUTH CAMPUS - 4965 RIEGEL ROAD

SCO ID NUMBER: 18-19226-01A
CODE: 41828
ITEM: 301

CONTRACTOR
Balfour Beatty Construction

DESIGNER
CLARKNEXSEN
1523 ELIZABETH AVENUE, SUITE 300
CHARLOTTE, NORTH CAROLINA 28204
704·377·8800
CLARK NEXSEN LICENSE NUMBER: C-1028

WALKER CONSULTANTS
13860 Ballantyne Corporate Place
Suite 140
Charlotte, NC 28277
T: 704.247.6230
www.walkerconsultants.com
NC License No. F-0518

McKIM&CREED
CIVIL ENGINEER
243 NORTH FRONT STREET
WILMINGTON, NORTH CAROLINA
28401
910.343.1048

PROFESSIONAL SEAL

NOT FOR CONSTRUCTION
NORTH CAROLINA PROFESSIONAL SEAL 028007 ENGINEER JOEY D. ROWLAND

SUBMITTAL
04/15/2019
CONSTRUCTION DOCUMENT SUBMITTAL 01

REVISIONS

KEY PLAN

SHEET
LEVEL 4 PLAN

S-104

DESIGN: Designer
DRAWN: Author
REVIEW: Checker

CN PROJECT NUMBER

4/15/2019 5:34:57 PM
C:\Revit Projects\UNC Wilmington Deck II_r17_roy grantham.rvt

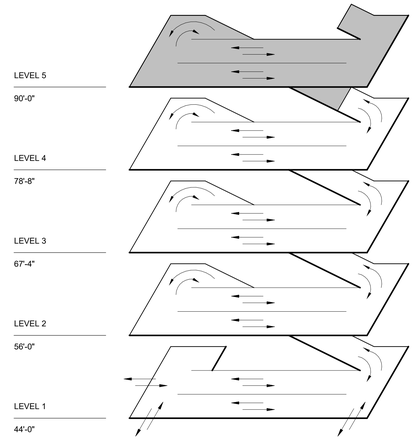

ISOMETRIC

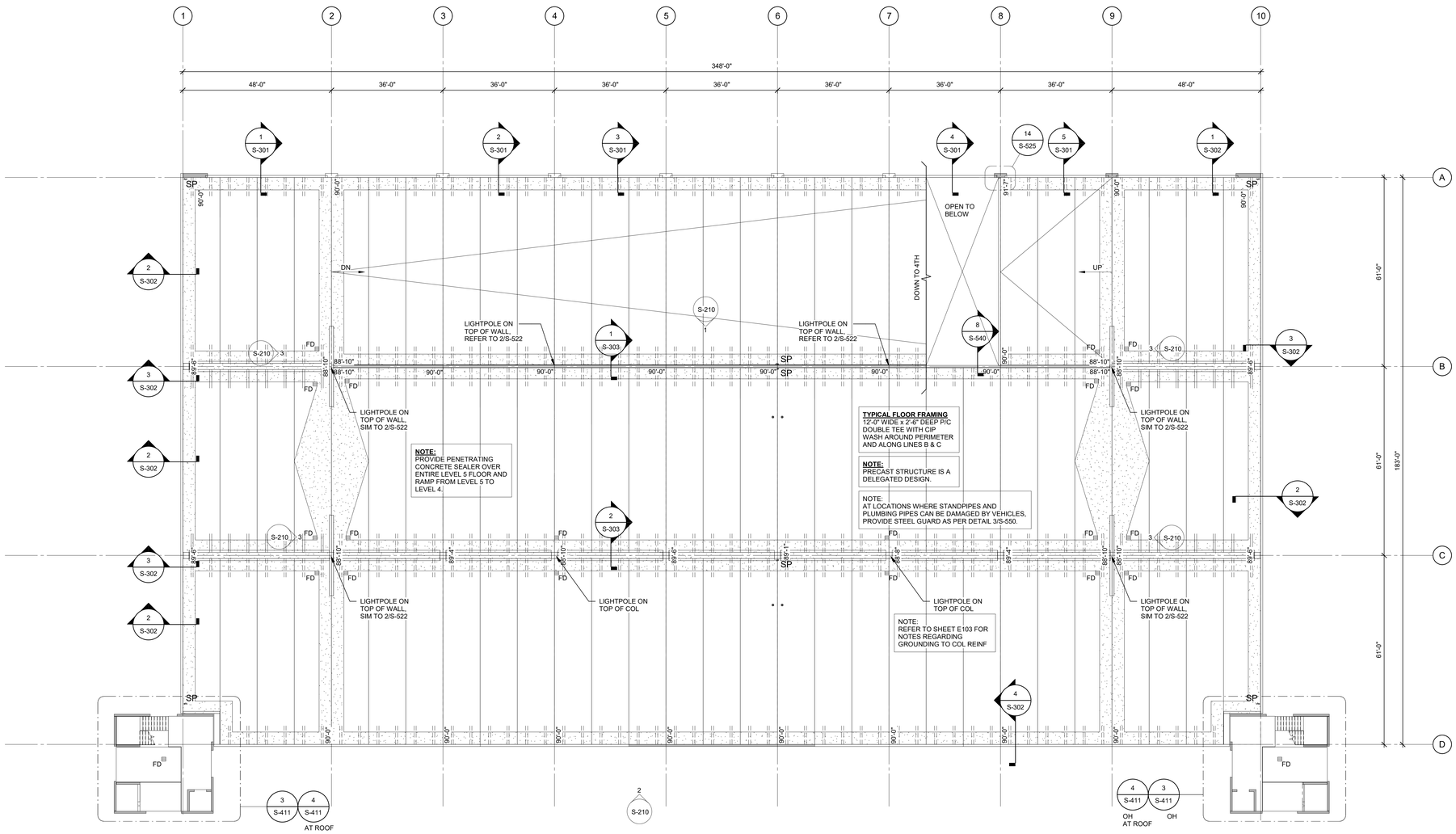

1 LEVEL 5 PLAN
1/16" = 1'-0"

SHEET NOTES

1. SEE SHEET S-103 FOR TYPICAL SHEET NOTES AND LOCATIONS OF TYPICAL DETAIL REFERENCES (UNLESS NOTED).

LEGEND

- CIP
- PRECAST CONCRETE
- CMU
- CONCRETE WASH / TOPPING
- CIP POUR STRIP
- TRAFFIC TOPPING

UNCW
UNIVERSITY of NORTH CAROLINA WILMINGTON
601 S COLLEGE ROAD
WILMINGTON, NORTH CAROLINA 28403

PARKING DECK II AND SURFACE PARKING (DESIGN-BUILD)
SOUTH CAMPUS - 4965 RIEGEL ROAD

SCO ID NUMBER: 18-19226-01A
CODE: 41828
ITEM: 301

CONTRACTOR
Balfour Beatty Construction

DESIGNER
CLARKNEXSEN
1523 ELIZABETH AVENUE, SUITE 300
CHARLOTTE, NORTH CAROLINA 28204
704·377·8800
CLARK NEXSEN LICENSE NUMBER: C-1028

WALKER CONSULTANTS
13860 Ballantyne Corporate Place
Suite 140
Charlotte, NC 28277
T: 704.247.6230
www.walkerconsultants.com
NC License No. F-0518

McKIM&CREED
CIVIL ENGINEER
243 NORTH FRONT STREET
WILMINGTON, NORTH CAROLINA
28401
910.343.1048

PROFESSIONAL SEAL
NOT FOR CONSTRUCTION
NORTH CAROLINA PROFESSIONAL SEAL 028007 ENGINEER JOEY D. ROWLAND

SUBMITTAL
04/15/2019
CONSTRUCTION DOCUMENT SUBMITTAL 01

REVISIONS

KEY PLAN

SHEET
LEVEL 5 PLAN

S-105

DESIGN: Designer
DRAWN: Author
REVIEW: Checker

CN PROJECT NUMBER

4/15/2019 5:34:59 PM
C:\Revit Projects\UNC-Wilmington Deck II_v17_roy.grantham.rvt

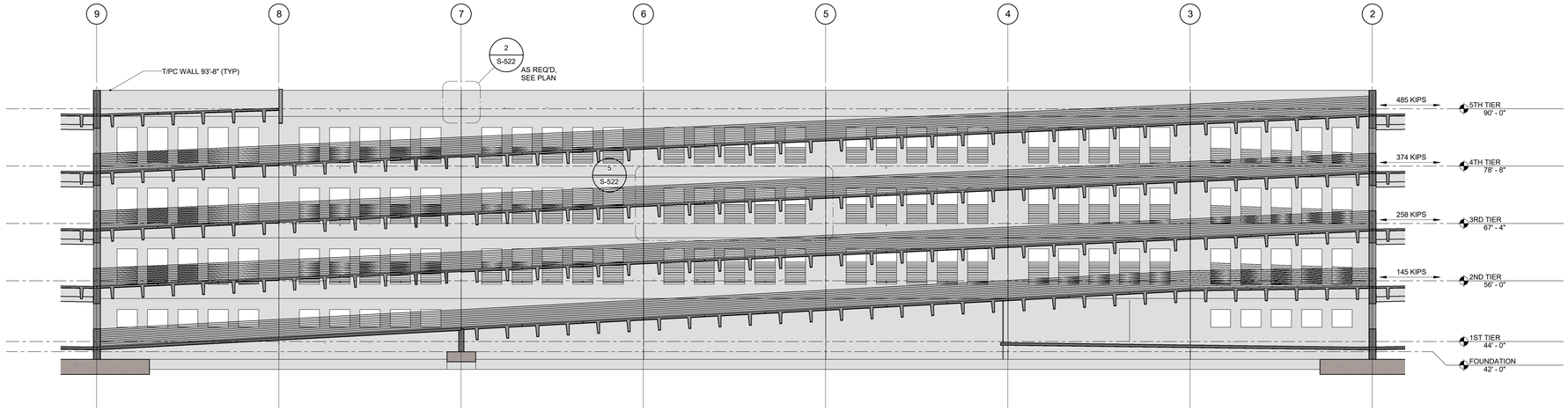

1 LITEWALL ELEVATION

3/32" = 1'-0"

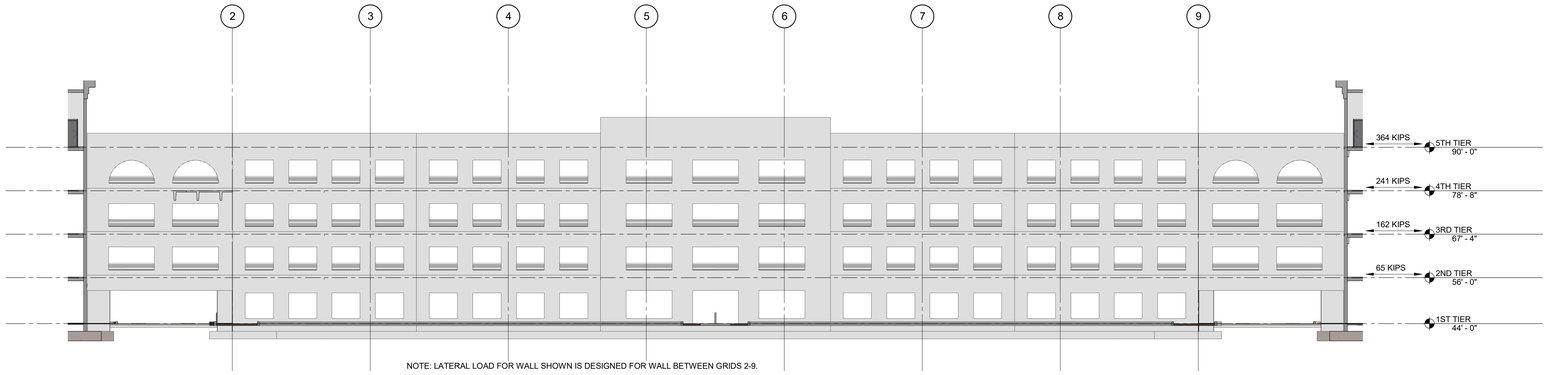

NOTE: LATERAL LOAD FOR WALL SHOWN IS DESIGNED FOR WALL BETWEEN GRIDS 2-9.

2 EXTERIOR LATERAL WALL ELEVATION

1/16" = 1'-0"

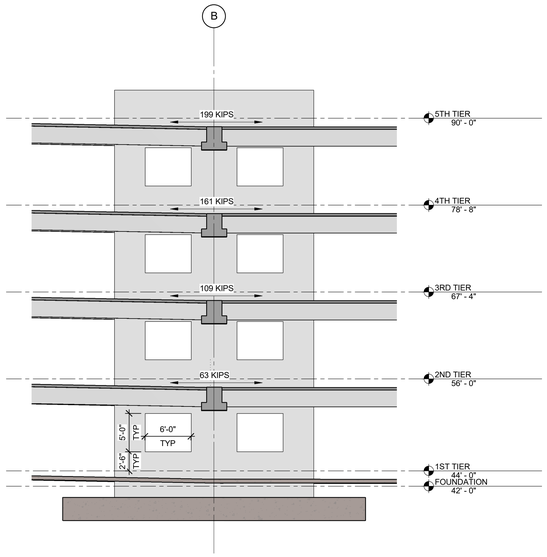

3 SHEAR WALL ELEVATION

1/8" = 1'-0"

SHEET NOTES

REFERENCES:

1. GENERAL NOTES. S-001
2. TYPICAL DETAILS S-501
3. PRECAST COLUMN SCHEDULE S-100
4. PRECAST STRUCTURAL WALL ELEVATIONS S-200 SERIES
5. ENLARGED PLANS S-400 SERIES
6. PRECAST BEAM DETAILS, SCHEDULE & NOTES S-520
7. PRECAST TEE DETAILS & NOTES S-521
8. LAP SPLICE SCHEUDLE S-650

PRECAST SHEAR WALL NOTES:

1. FOR GENERAL NOTES, SEE S-001.
2. SHEAR WALL DESIGN IS PERFORMANCE DESIGN AND SHALL INCLUDE SIZE, NUMBER AND LOCATION OF VERTICAL AND HORIZONTAL REINCORCING. DESIGN SHALL ALSO INCLUDE BASE CONNECTIONS, PIECE CONNECTIONS, HAUNCH OR LEDGE REINFORCEMENT, AND SIZE, NUMBER, AND SPACING OF INSERT/COIL ROD (OR OTHER SHEAR TRANSFER) CONNECTIONS INTO POUR STRIPS FOR SHEAR TRANSFER OF LATERAL LOADS. SEE SPECIFICATION 03410 FOR PRECAST CONCRETE.
3. FOR SHEAR WALL SIZES, SEE SHEAR WALL ELEVATIONS 3/S-210 AND STRUCTURAL DETAILS. FOR SHEAR WALL OPENINGS, SEE 3/S-210.
4. FOR EMBEDDED PLATES TO RECEIVE WELDS AS PART OF WELDED CONNECTIONS, SEE 7/S-524.
5. FOR SHEAR WALL BASE CONNECTION, SEE 12/S-524.
6. FOR LATERAL LOADS DUE TO SEISMIC, SEE 1, 2, & 3/S-210.
7. PRECAST MANUFACTURER TO CONDUCT THEIR OWN LATERAL ANALYSIS FOR SHEAR WALL MEMBER AND CONNECTION DESIGN.

UNCW
UNIVERSITY of NORTH CAROLINA WILMINGTON
601 S COLLEGE ROAD
WILMINGTON, NORTH CAROLINA 28403

PARKING DECK II AND SURFACE PARKING (DESIGN-BUILD)
SOUTH CAMPUS - 4965 RIEGEL ROAD

SCO ID NUMBER: 18-19226-01A
CODE: 41828
ITEM: 301

CONTRACTOR
Balfour Beatty Construction

DESIGNER
CLARKNEXSEN
1523 ELIZABETH AVENUE, SUITE 300
CHARLOTTE, NORTH CAROLINA 28204
704.377.8800
CLARK NEXSEN LICENSE NUMBER: C-1028

WALKER CONSULTANTS
13860 Ballantyne Corporate Place
Suite 140
Charlotte, NC 28277
T: 704.247.6230
www.walkerconsultants.com
NC License No. F-0518

McKIM&CREED
CIVIL ENGINEER
243 NORTH FRONT STREET
WILMINGTON, NORTH CAROLINA
28401
910.343.1048

PROFESSIONAL SEAL

NOT FOR CONSTRUCTION
NORTH CAROLINA PROFESSIONAL SEAL 028007 ENGINEER JOEY D. ROWLAND

SUBMITTAL

04/15/2019

CONSTRUCTION DOCUMENT SUBMITTAL 01

REVISIONS

KEY PLAN

SHEET

SHEAR WALL & LITEWALL ELEVATIONS

S-210

DESIGN: Designer
DRAWN: Author
REVIEW: Checker

CN PROJECT NUMBER

4/15/2019 5:35:02 PM
C:\Revit Projects\UNC Wilmington Deck II_r17_csy.grantham.rvt

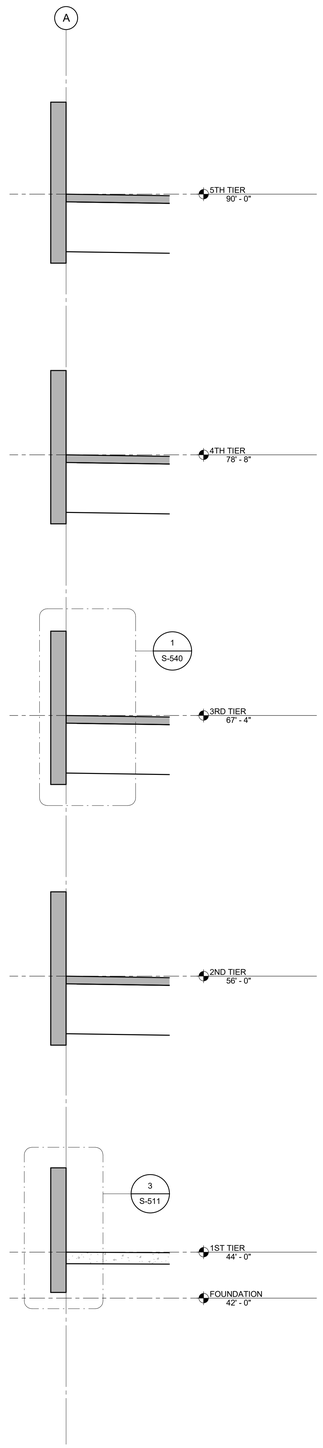

1 WALL SECTION
3/8" = 1'-0"

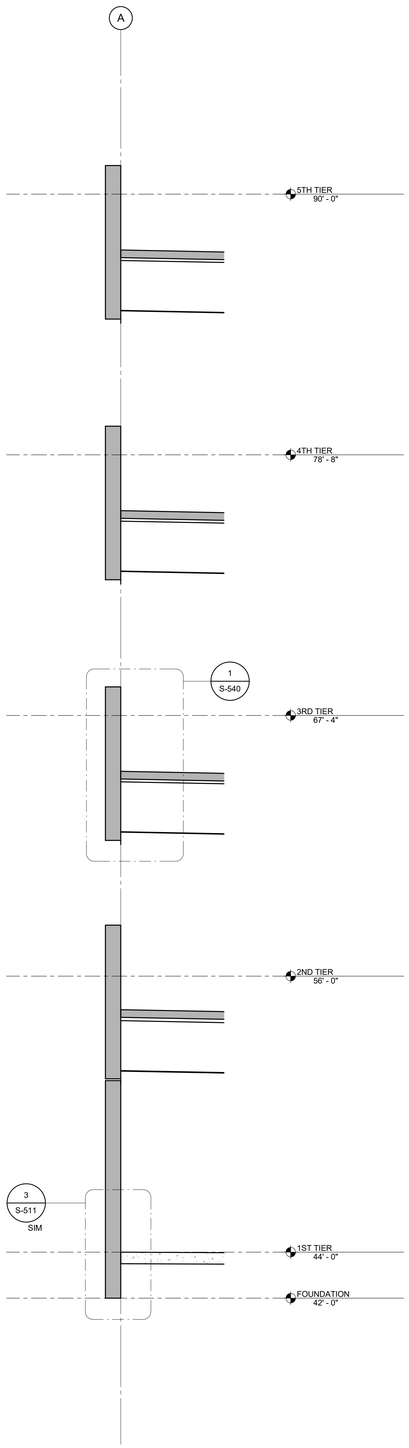

2 WALL SECTION
3/8" = 1'-0"

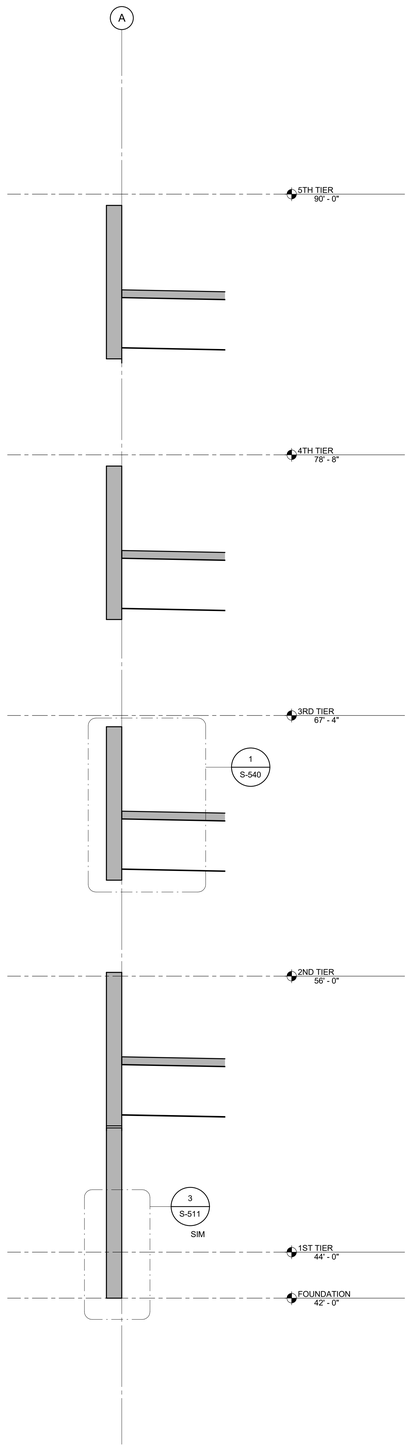

3 WALL SECTION
3/8" = 1'-0"

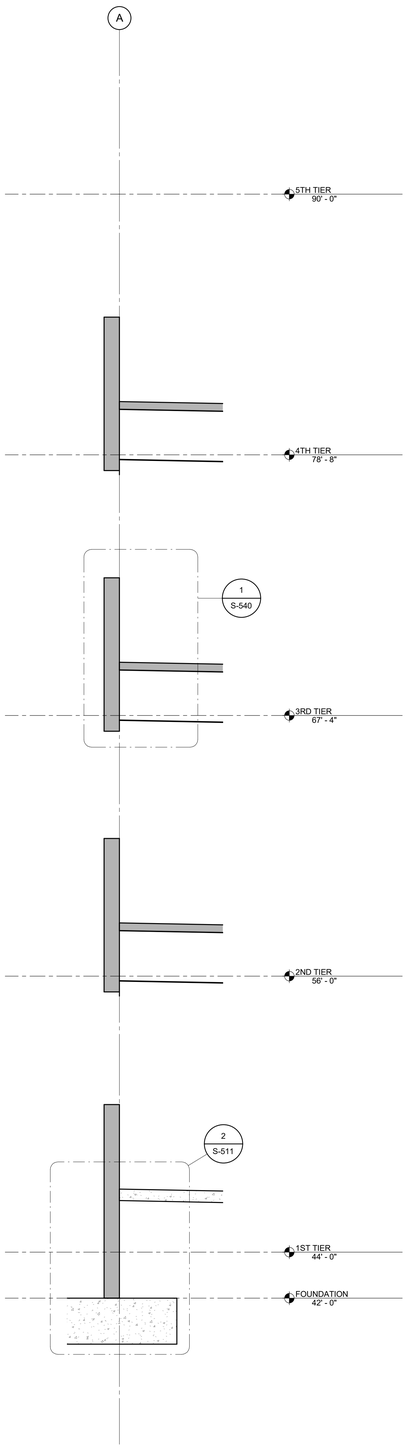

4 WALL SECTION
3/8" = 1'-0"

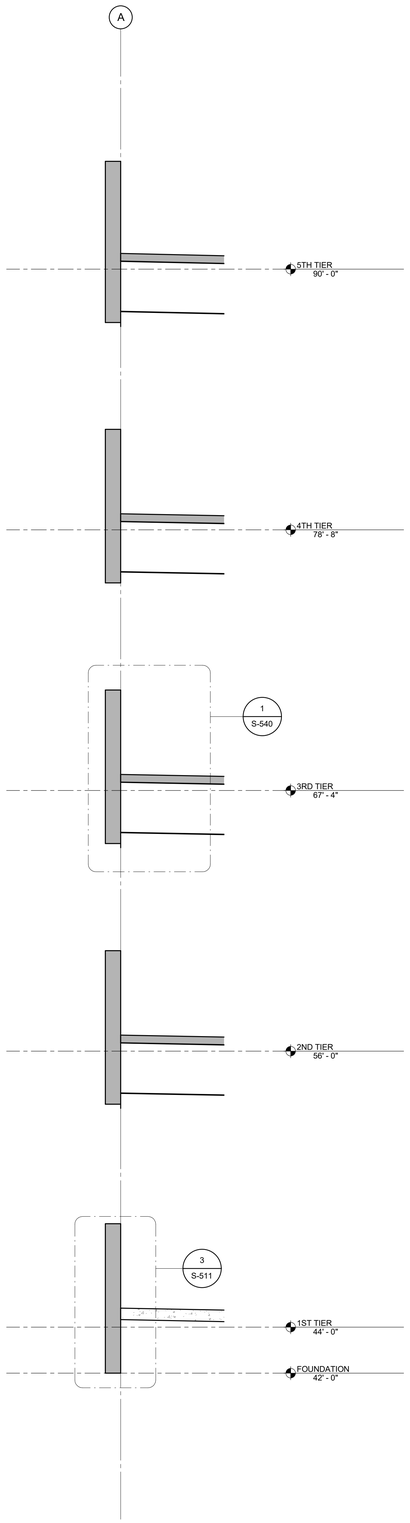

5 WALL SECTION
3/8" = 1'-0"

UNCW
UNIVERSITY of NORTH CAROLINA WILMINGTON
601 S COLLEGE ROAD
WILMINGTON, NORTH CAROLINA 28403

PARKING DECK II AND SURFACE PARKING (DESIGN-BUILD)
SOUTH CAMPUS - 4965 RIEGEL ROAD

SCO ID NUMBER: 18-19226-01A
CODE: 41828
ITEM: 301

CONTRACTOR
Balfour Beatty Construction

DESIGNER
CLARKNEXSEN
1523 ELIZABETH AVENUE, SUITE 300
CHARLOTTE, NORTH CAROLINA 28204
704·377·8800

CLARK NEXSEN LICENSE NUMBER: C-1028

WALKER CONSULTANTS
13860 Ballantyne Corporate Place
Suite 140
Charlotte, NC 28277
T: 704.247.6230
www.walkerconsultants.com
NC License No. F-0518

McKIM&CREED
CIVIL ENGINEER
243 NORTH FRONT STREET
WILMINGTON, NORTH CAROLINA
28401
910.343.1048

PROFESSIONAL SEAL
NOT FOR CONSTRUCTION
NORTH CAROLINA PROFESSIONAL SEAL 028007 ENGINEER JOEY D. ROWLAND

SUBMITTAL
04/15/2019
CONSTRUCTION DOCUMENT SUBMITTAL 01

REVISIONS

KEY PLAN

SHEET
BUILDING SECTIONS

S-301

DESIGN: Designer
DRAWN: Author
REVIEW: Checker

CN PROJECT NUMBER

4/15/2019 5:35:04 PM
C:\Revit Projects\UNC Wilmington Deck II_r17_ory.grantham.rvt

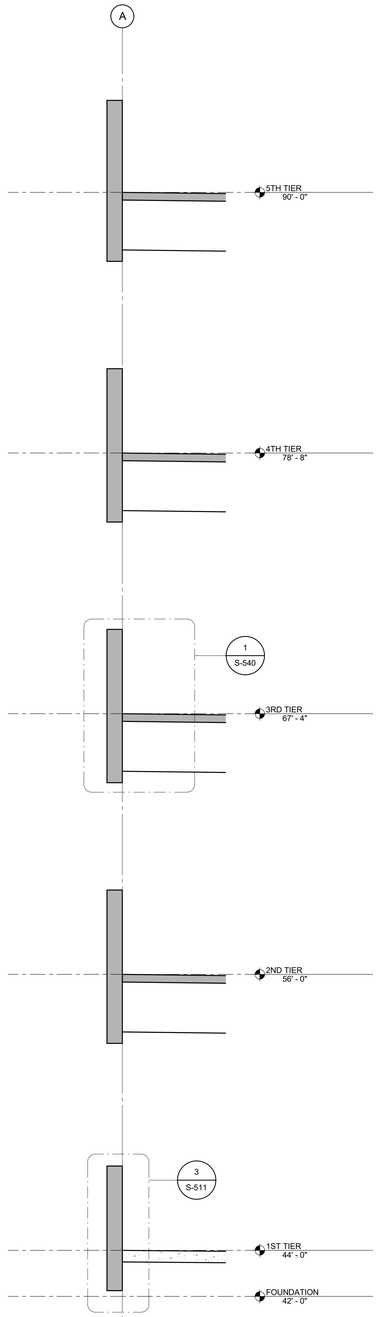

1 WALL SECTION
3/8" = 1'-0"

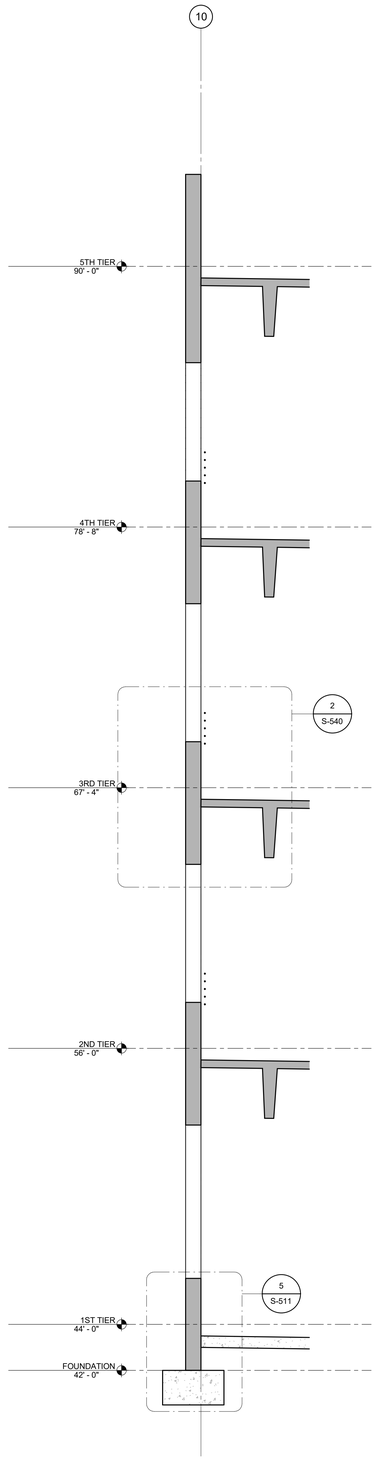

2 WALL SECTION
3/8" = 1'-0"

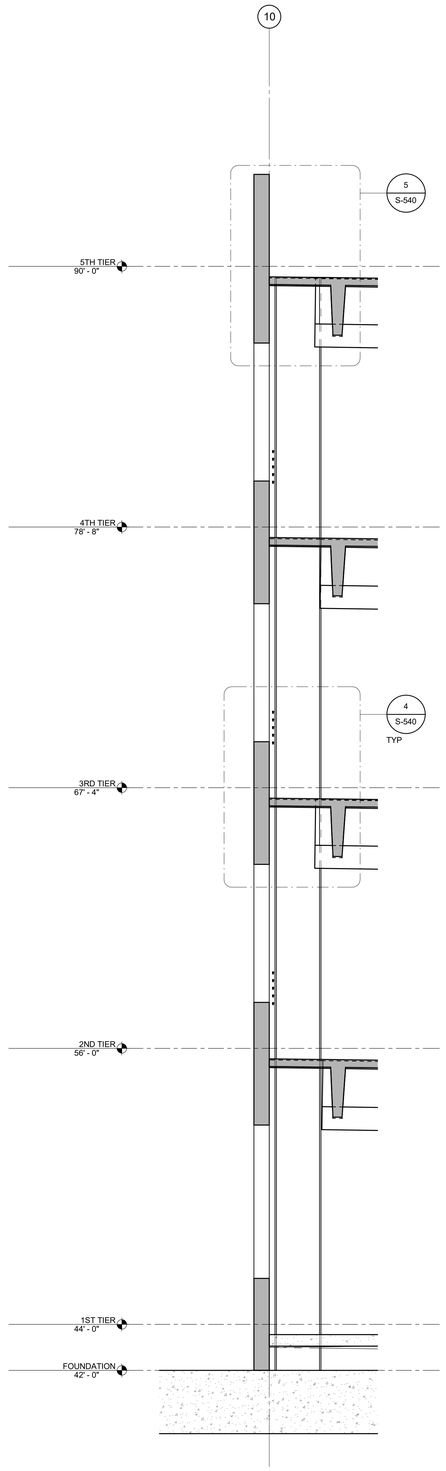

3 WALL SECTION
3/8" = 1'-0"

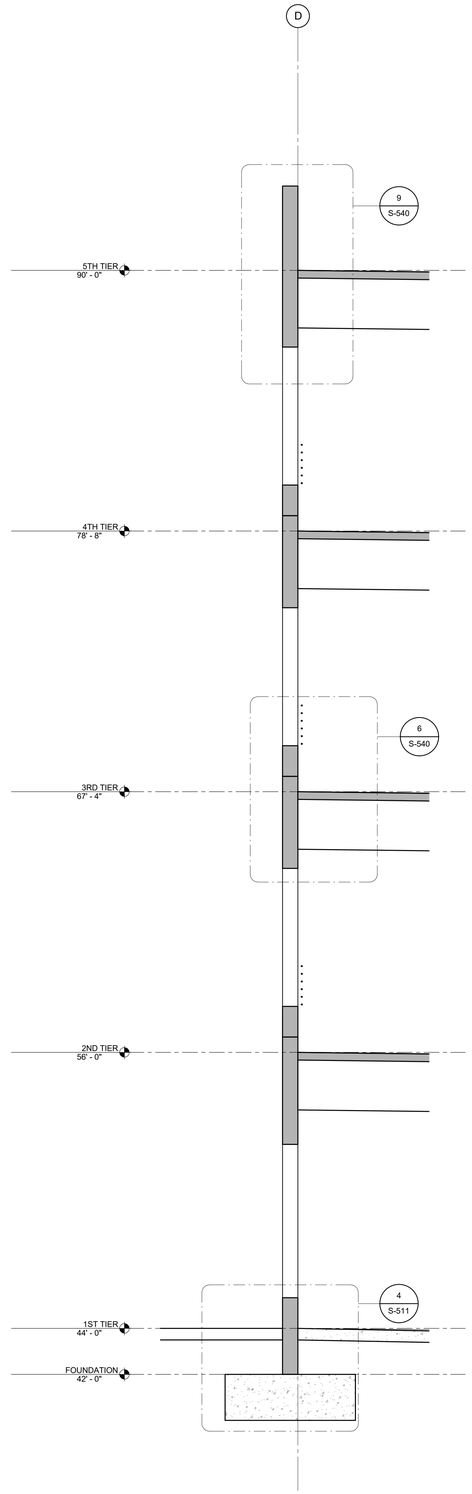

4 WALL SECTION
3/8" = 1'-0"

UNCW
UNIVERSITY of NORTH CAROLINA WILMINGTON
601 S COLLEGE ROAD
WILMINGTON, NORTH CAROLINA 28403

PARKING DECK II AND SURFACE PARKING (DESIGN-BUILD)
SOUTH CAMPUS - 4965 RIEGEL ROAD

SCO ID NUMBER: 18-19226-01A
CODE: 41828
ITEM: 301

CONTRACTOR
Balfour Beatty Construction

DESIGNER
CLARKNEXSEN
1523 ELIZABETH AVENUE, SUITE 300
CHARLOTTE, NORTH CAROLINA 28204
704.377.8800

CLARK NEXSEN LICENSE NUMBER: C-1028

WALKER CONSULTANTS
13860 Ballantyne Corporate Place
Suite 140
Charlotte, NC 28277
T: 704.247.6230
www.walkerconsultants.com
NC License No. F-0518

McKIM&CREED
CIVIL ENGINEER
243 NORTH FRONT STREET
WILMINGTON, NORTH CAROLINA
28401
910.343.1048

PROFESSIONAL SEAL
NOT FOR CONSTRUCTION
NORTH CAROLINA PROFESSIONAL SEAL 028007 ENGINEER JOEY D. ROWLAND

SUBMITTAL
04/15/2019
CONSTRUCTION DOCUMENT SUBMITTAL 01

REVISIONS

KEY PLAN

SHEET
BULDING SECTIONS

S-302

DESIGN: Designer
DRAWN: Author
REVIEW: Checker

CN PROJECT NUMBER

4/15/2019 5:35:05 PM
C:\Revit Projects\UNC Wilmington Deck II_r17_roy.grantham.rvt

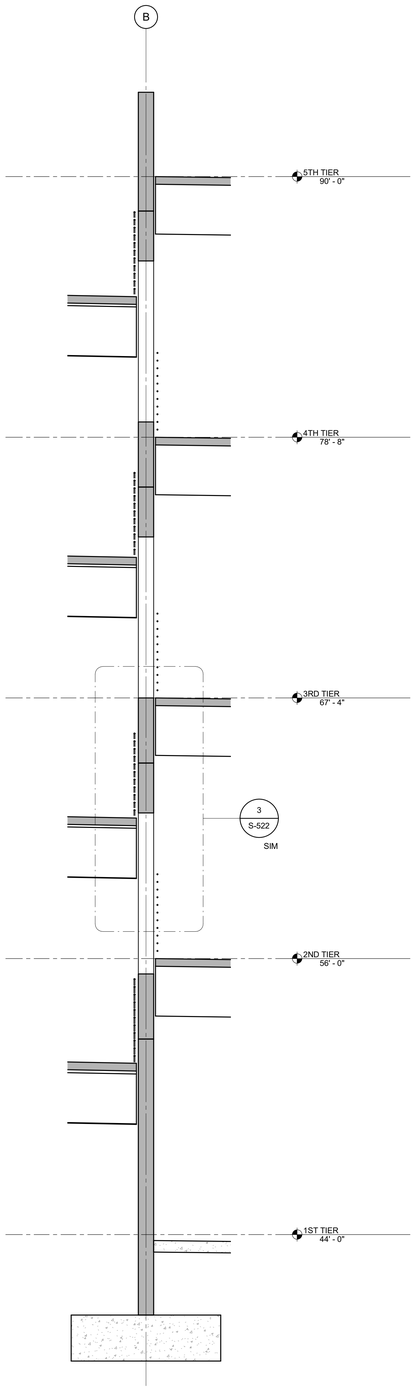

1 WALL SECTION
3/8" = 1'-0"

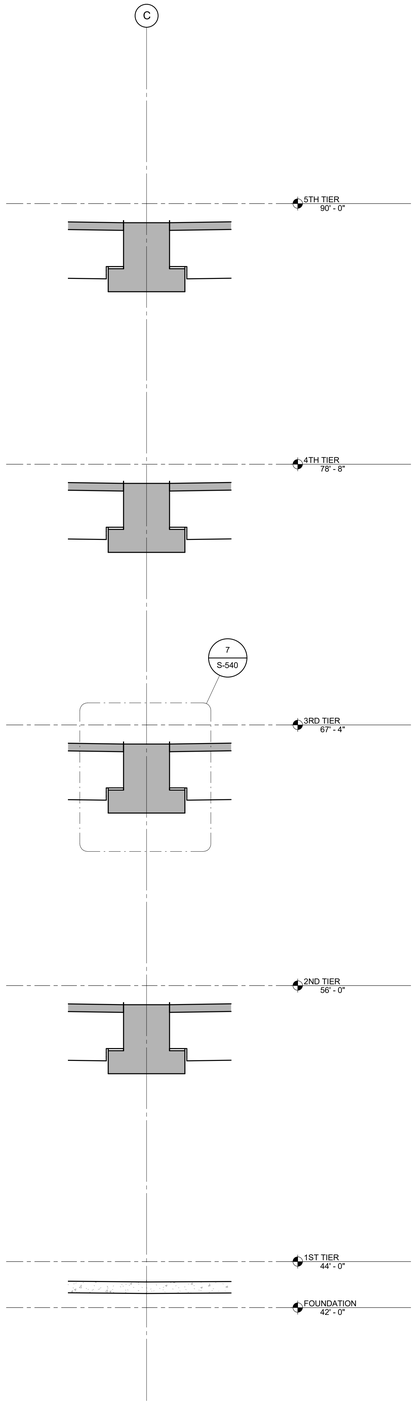

2 WALL SECTION
3/8" = 1'-0"

UNIVERSITY of NORTH CAROLINA WILMINGTON
601 S COLLEGE ROAD
WILMINGTON, NORTH CAROLINA 28403

PARKING DECK II AND SURFACE PARKING (DESIGN-BUILD)
SOUTH CAMPUS - 4965 RIEGEL ROAD

SCO ID NUMBER: 18-19226-01A
CODE: 41828
ITEM: 301

CONTRACTOR
Balfour Beatty Construction

DESIGNER
CLARKNEXSEN
1523 ELIZABETH AVENUE, SUITE 300
CHARLOTTE, NORTH CAROLINA 28204
704·377·8800

CLARK NEXSEN LICENSE NUMBER: C-1028

WALKER CONSULTANTS
13860 Ballantyne Corporate Place
Suite 140
Charlotte, NC 28277
T: 704.247.6230
www.walkerconsultants.com
NC License No. F-0518

McKIM&CREED
CIVIL ENGINEER
243 NORTH FRONT STREET
WILMINGTON, NORTH CAROLINA
28401
910.343.1048

PROFESSIONAL SEAL
NORTH CAROLINA PROFESSIONAL SEAL 028007 ENGINEER JOEY D. ROWLAND
NOT FOR CONSTRUCTION

SUBMITTAL
04/15/2019
CONSTRUCTION DOCUMENT SUBMITTAL 01

REVISIONS

KEY PLAN

SHEET
BUILDING SECTIONS

S-303

DESIGN: Designer
DRAWN: Author
REVIEW: Checker

CN PROJECT NUMBER

4/15/2019 5:35:06 PM
C:\Revit Projects\UNC Wilmington Deck II_r17_rsy.grantham.rvt

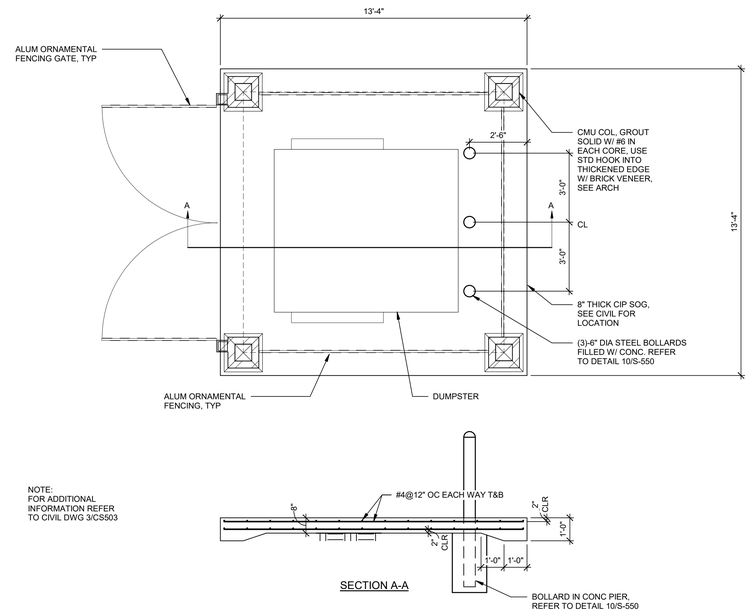

NOTE:
FOR ADDITIONAL INFORMATION REFER TO CIVIL DWG 3/CS503

2 DUMPSTER PAD

3/8" = 1'-0"

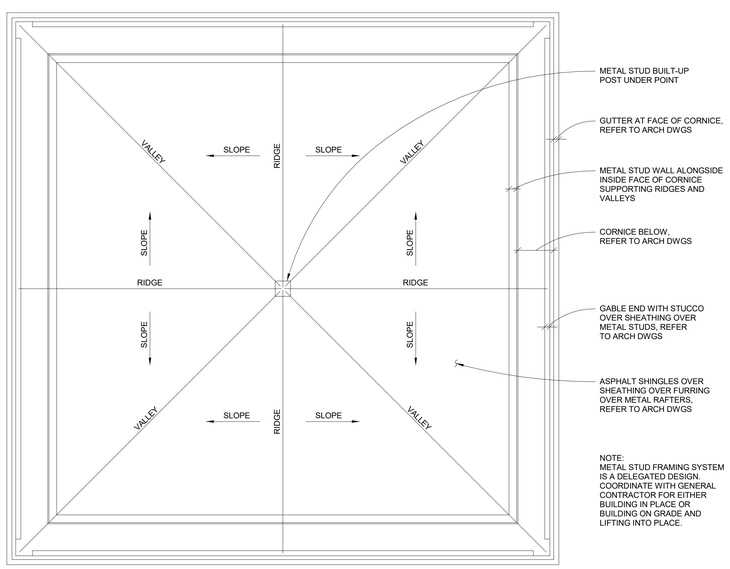

NOTE:
METAL STUD FRAMING SYSTEM IS A DELEGATED DESIGN, COORDINATE WITH GENERAL CONTRACTOR FOR EITHER BUILDING IN PLACE OR BUILDING ON GRADE AND LIFTING INTO PLACE.

3 METAL STUD ROOF FRAMING PLAN

1/4" = 1'-0"

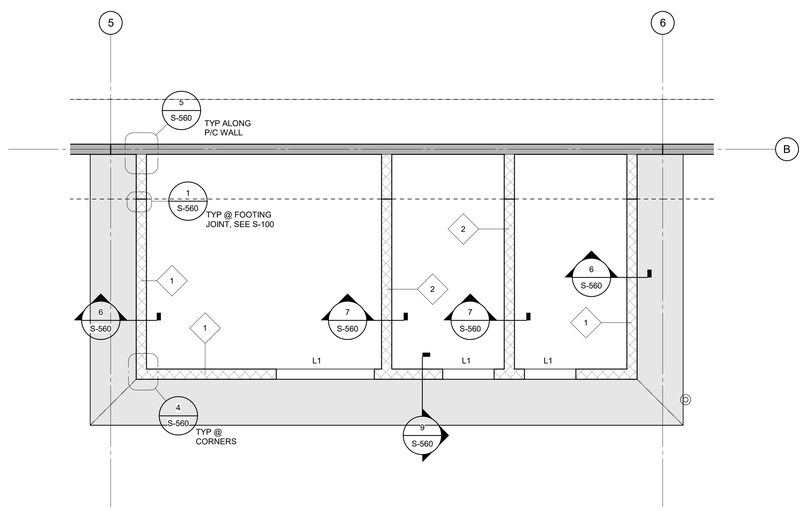

1 ENLARGED PLAN

1/4" = 1'-0"

SHEET NOTES

REFERENCES:

1. GENERAL NOTES. S-001
2. TYPICAL DETAILS S-501
3. PRECAST COLUMN SCHEDULE S-103
4. PRECAST STRUCTURAL WALL ELEVATIONS S-200 SERIES
5. ENLARGED PLANS S-400 SERIES
6. PRECAST BEAM DETAILS, SCHEDULE & NOTES S-525
7. PRECAST TEE DETAILS & NOTES

NOTES:

1. FOR CMU REBAR, SEE DETAIL 10/S-560.
2. FOR LINTEL INFORMATION, SEE DETAIL 8/S-560.

LEGEND

X CMU WALL TYPE, SEE 10/S-560

LX LINTEL TYPE, SEE 8/S-560

UNCW
UNIVERSITY of NORTH CAROLINA WILMINGTON
601 S COLLEGE ROAD
WILMINGTON, NORTH CAROLINA 28403

PARKING DECK II AND SURFACE PARKING (DESIGN-BUILD)
SOUTH CAMPUS - 4965 RIEGEL ROAD

SCO ID NUMBER: 18-19226-01A
CODE: 41828
ITEM: 301

CONTRACTOR
Balfour Beatty Construction

DESIGNER
CLARKNEXSEN
1523 ELIZABETH AVENUE, SUITE 300
CHARLOTTE, NORTH CAROLINA 28204
704.377.8800

CLARK NEXSEN LICENSE NUMBER: C-1028

WALKER CONSULTANTS
13860 Ballantyne Corporate Place
Suite 140
Charlotte, NC 28277
T: 704.247.6230
www.walkerconsultants.com
NC License No. F-0518

McKIM&CREED
CIVIL ENGINEER
243 NORTH FRONT STREET
WILMINGTON, NORTH CAROLINA
28401
910.343.1048

PROFESSIONAL SEAL
NOT FOR CONSTRUCTION
NORTH CAROLINA PROFESSIONAL SEAL 028007 ENGINEER JOEY D. ROWLAND

SUBMITTAL
04/15/2019
CONSTRUCTION DOCUMENT SUBMITTAL 01

REVISIONS

KEY PLAN

SHEET
(MISC) ENLARGED PLANS

S-401

DESIGN: Designer
DRAWN: Author
REVIEW: Checker

CN PROJECT NUMBER

4/15/2019 5:35:07 PM
C:\Revit Projects\UNC Wilmington Deck II_r17_roy.grantham.rvt

	FOUNDATION LOAD TAKEDOWN				
	GRAVITY LOAD (KLF)			MOMENT (KIP-FT)	
LABEL	DEAD	LIVE	SNOW	SEISMIC	WIND
WALL 1	15.0	3.6	0.2	430	580
WALL 2	26.1	9.5	0.5	1430	1920
WALL 3	30.3	11.7	0.6	700	950
WALL 4	8.6	0.0	0.0	830	970
WALL 5	8.6	0.0	0.0	150	170
WALL 6	8.6	0.0	0.0	1480	1690
WALL 7	21.1	6.9	0.4	380	450
WALL 8	20.5	5.1	0.4	480	540
WALL 9	14.4	2.0	0.2	700	950
WALL 10	8.6	0.0	0.0	1480	1690
WALL 11	8.7	3.5	0.5	N/A	N/A

NOTE: MOMENTS ARE ULTIMATE AND REVERSIBLE.

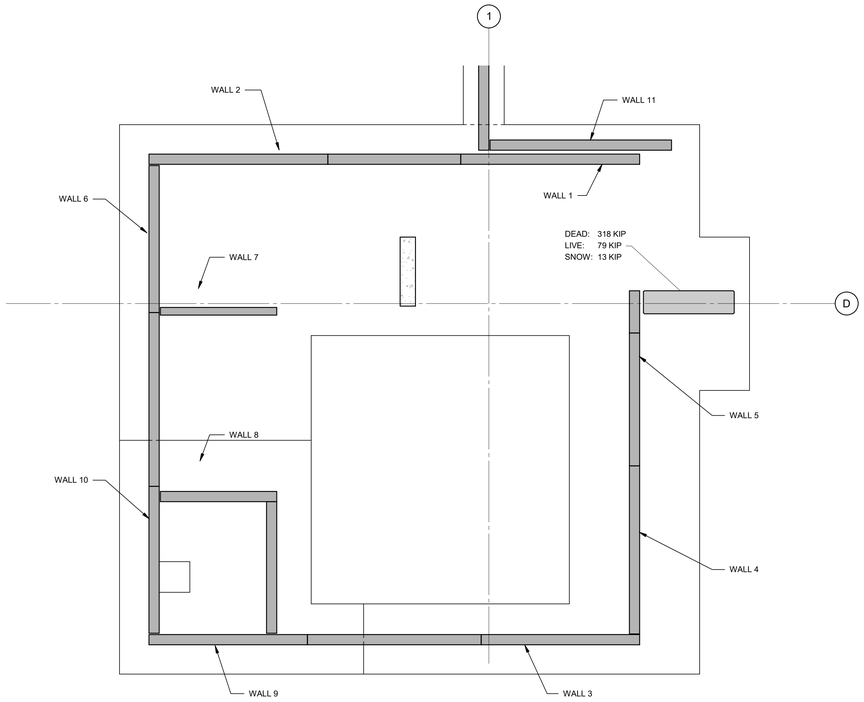

2 FOUNDATION LOAD PLAN
1/4" = 1'-0"

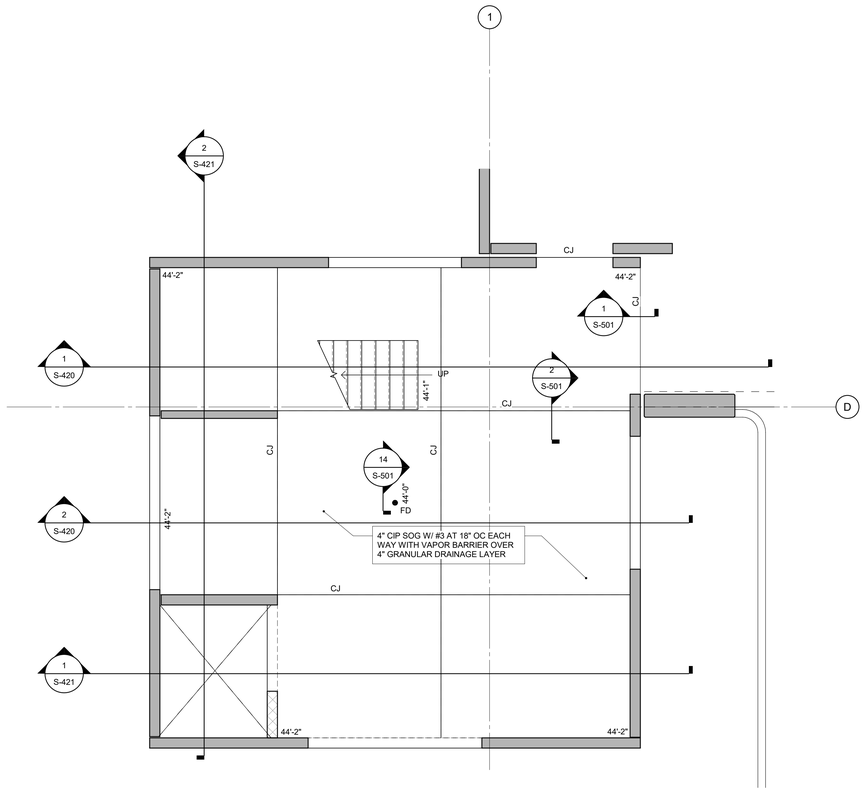

4 LEVEL 1 PLAN
1/4" = 1'-0"

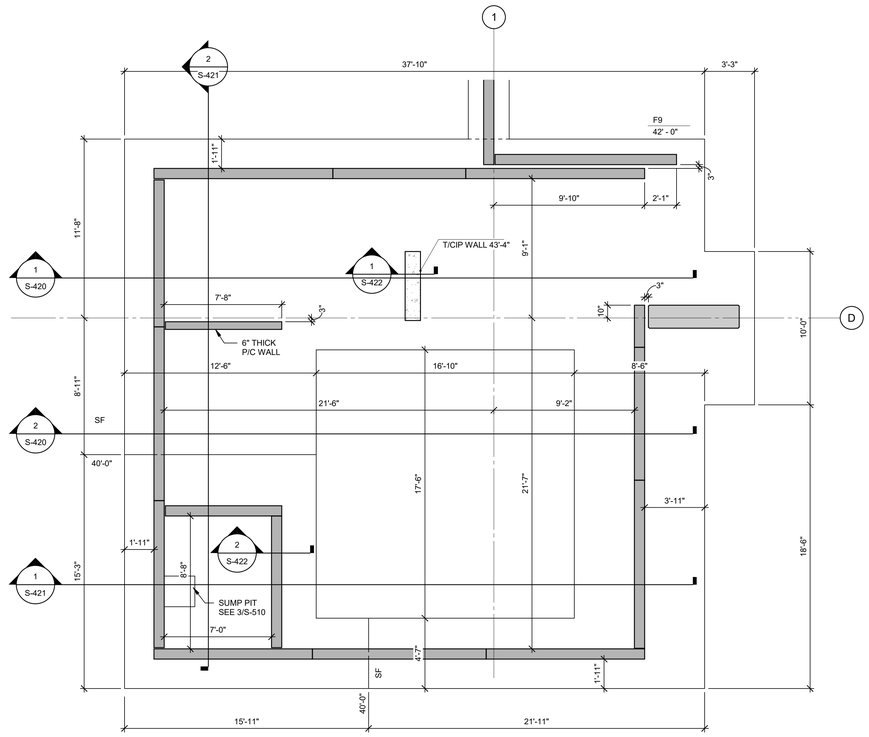

1 FOUNDATION PLAN
1/4" = 1'-0"

SHEET NOTES

REFERENCES:

1. GENERAL NOTES. S-001
2. TYPICAL DETAILS S-501
3. PRECAST COLUMN SCHEDULE S-100
4. PRECAST STRUCTURAL WALL ELEVATIONS S-200 SERIES
5. ENLARGED PLANS S-400 SERIES
6. PRECAST BEAM DETAILS, SCHEDULE & NOTES S-520
7. PRECAST TEE DETAILS & NOTES S-521
8. LAP SPLICE SCHEDULE S-650

NOTES:

1. USE STRAIGHT LINE INTERPOLATION FOR FLOOR ELEVATION BETWEEN THOSE INDICATED.
2. PROVIDE TOOLED AND SEALED CONTROL JOINTS IN ALL CIP TOPPING DIRECTLY OVER PRECAST JOINTS, UNO.
3. FOR LATERAL LOADS DUE TO WIND & SEISMIC, SEE TABLE BELOW.
4. PRECAST MANUFACTURER TO CONDUCT THEIR OWN LATERAL ANALYSIS FOR WALL MEMBER AND CONNECTION DESIGN.

STAIR TOWER LATERAL LOAD SCHEDULE		
STAIR TOWER NO. 1 & NO. 2		
MARK	SEISMIC ULTIMATE (1.0E) [KIPS]	WIND ULTIMATE (1.0W) [KIPS]
ROOF	29	34
LEVEL 5	23	25
LEVEL 4	17	25
LEVEL 3	12	24
LEVEL 2	7	26

LEGEND

- CIP
- PRECAST CONCRETE
- CMU
- CONCRETE WASH / TOPPING
- CIP POUR STRIP
- TRAFFIC TOPPING

UNCW
UNIVERSITY of NORTH CAROLINA WILMINGTON
601 S COLLEGE ROAD
WILMINGTON, NORTH CAROLINA 28403

PARKING DECK II AND SURFACE PARKING (DESIGN-BUILD)
SOUTH CAMPUS - 4965 RIEGEL ROAD

SCO ID NUMBER: 18-19226-01A
CODE: 41828
ITEM: 301

CONTRACTOR
Balfour Beatty Construction

DESIGNER
CLARKNEXSEN
1523 ELIZABETH AVENUE, SUITE 300
CHARLOTTE, NORTH CAROLINA 28204
704.377.8800
CLARK NEXSEN LICENSE NUMBER: C-1028

WALKER CONSULTANTS
13860 Ballantyne Corporate Place
Suite 140
Charlotte, NC 28277
T: 704.247.6230
www.walkerconsultants.com
NC License No. F-0518

McKIM&CREED
CIVIL ENGINEER
243 NORTH FRONT STREET
WILMINGTON, NORTH CAROLINA
28401
910.343.1048

PROFESSIONAL SEAL

NOT FOR CONSTRUCTION
NORTH CAROLINA PROFESSIONAL SEAL 028007 ENGINEER JOEY D. ROWLAND

SUBMITTAL
04/15/2019
CONSTRUCTION DOCUMENT SUBMITTAL 01

REVISIONS

KEY PLAN

SHEET
STAIR TOWER NO. 2
ENLARGED PLANS

S-410

DESIGN: Designer
DRAWN: Author
REVIEW: Checker

CN PROJECT NUMBER

4/15/2019 5:35:10 PM
C:\Revit Projects\UNC Wilmington Deck II_r17_ory.grantham.rvt

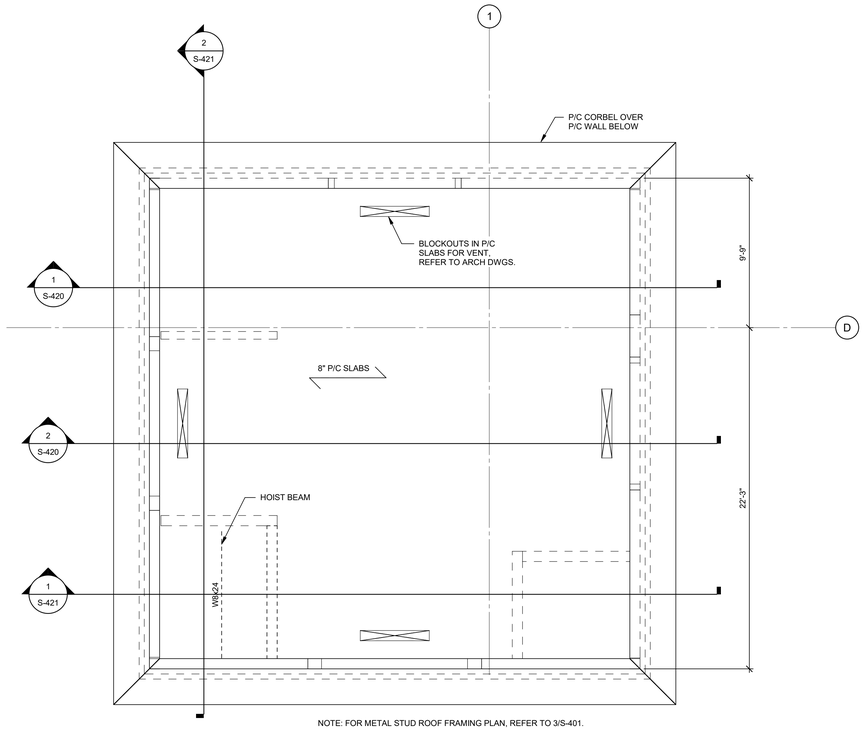

NOTE: FOR METAL STUD ROOF FRAMING PLAN, REFER TO 3/S-401.

4 ROOF PLAN
1/4" = 1'-0"

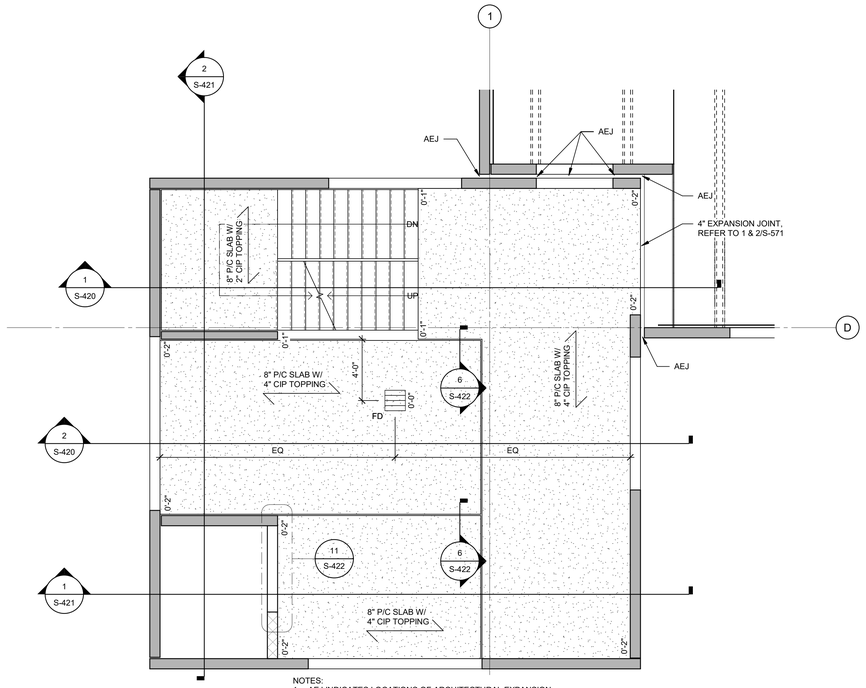

NOTES:
1. AEJ INDICATES LOCATIONS OF ARCHITECTURAL EXPANSION JOINTS, REFER TO ARCHITECTURAL DRAWINGS.

2 TYPICAL LEVEL PLAN
1/4" = 1'-0"

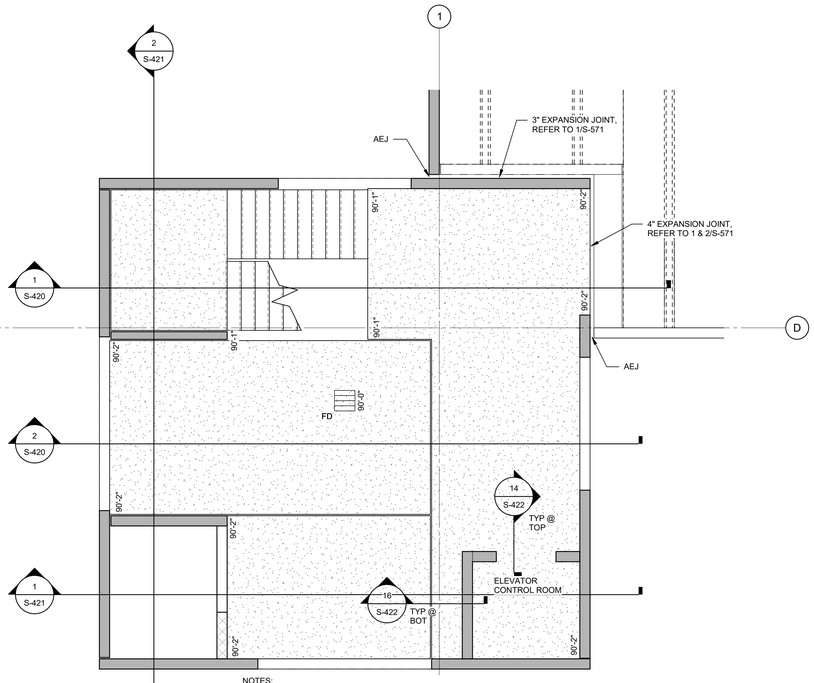

NOTES:
1. SEE 2/S-411 FOR TYPICAL PLAN DETAILS.
2. AEJ INDICATES LOCATIONS OF ARCHITECTURAL EXPANSION JOINTS, REFER TO ARCHITECTURAL DRAWINGS.

3 LEVEL 5 PLAN
1/4" = 1'-0"

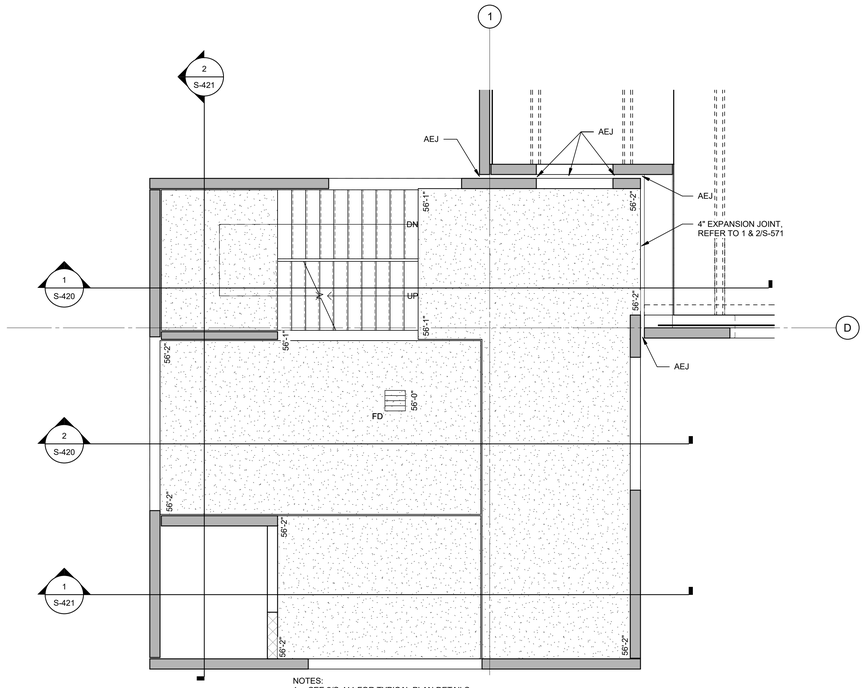

NOTES:
1. SEE 2/S-411 FOR TYPICAL PLAN DETAILS.
2. AEJ INDICATES LOCATIONS OF ARCHITECTURAL EXPANSION JOINTS, REFER TO ARCHITECTURAL DRAWINGS.

1 LEVEL 2 PLAN
1/4" = 1'-0"

UNCW
UNIVERSITY of NORTH CAROLINA WILMINGTON
601 S COLLEGE ROAD
WILMINGTON, NORTH CAROLINA 28403

PARKING DECK II AND SURFACE PARKING (DESIGN-BUILD)
SOUTH CAMPUS - 4965 RIEGEL ROAD

SCO ID NUMBER: 18-19226-01A
CODE: 41828
ITEM: 301

CONTRACTOR
Balfour Beatty Construction

DESIGNER

CLARKNEXSEN
1523 ELIZABETH AVENUE, SUITE 300
CHARLOTTE, NORTH CAROLINA 28204
704.377.8800
CLARK NEXSEN LICENSE NUMBER: C-1028

WALKER CONSULTANTS
13860 Ballantyne Corporate Place
Suite 140
Charlotte, NC 28277
T: 704.247.6230
www.walkerconsultants.com
NC License No. F-0518

McKIM&CREED
CIVIL ENGINEER
243 NORTH FRONT STREET
WILMINGTON, NORTH CAROLINA
28401
910.343.1048

PROFESSIONAL SEAL
NOT FOR CONSTRUCTION
NORTH CAROLINA PROFESSIONAL SEAL 028007 ENGINEER JOEY D. ROWLAND

SUBMITTAL
04/15/2019
CONSTRUCTION DOCUMENT SUBMITTAL 01

REVISIONS

KEY PLAN

SHEET
STAIR TOWER NO. 2
ENLARGED PLANS

S-411

DESIGN: Designer
DRAWN: Author
REVIEW: Checker

CN PROJECT NUMBER

4/15/2019 5:35:10 PM
C:\Revit Projects\UNC Wilmington Deck II_r17_my.grantham.rvt

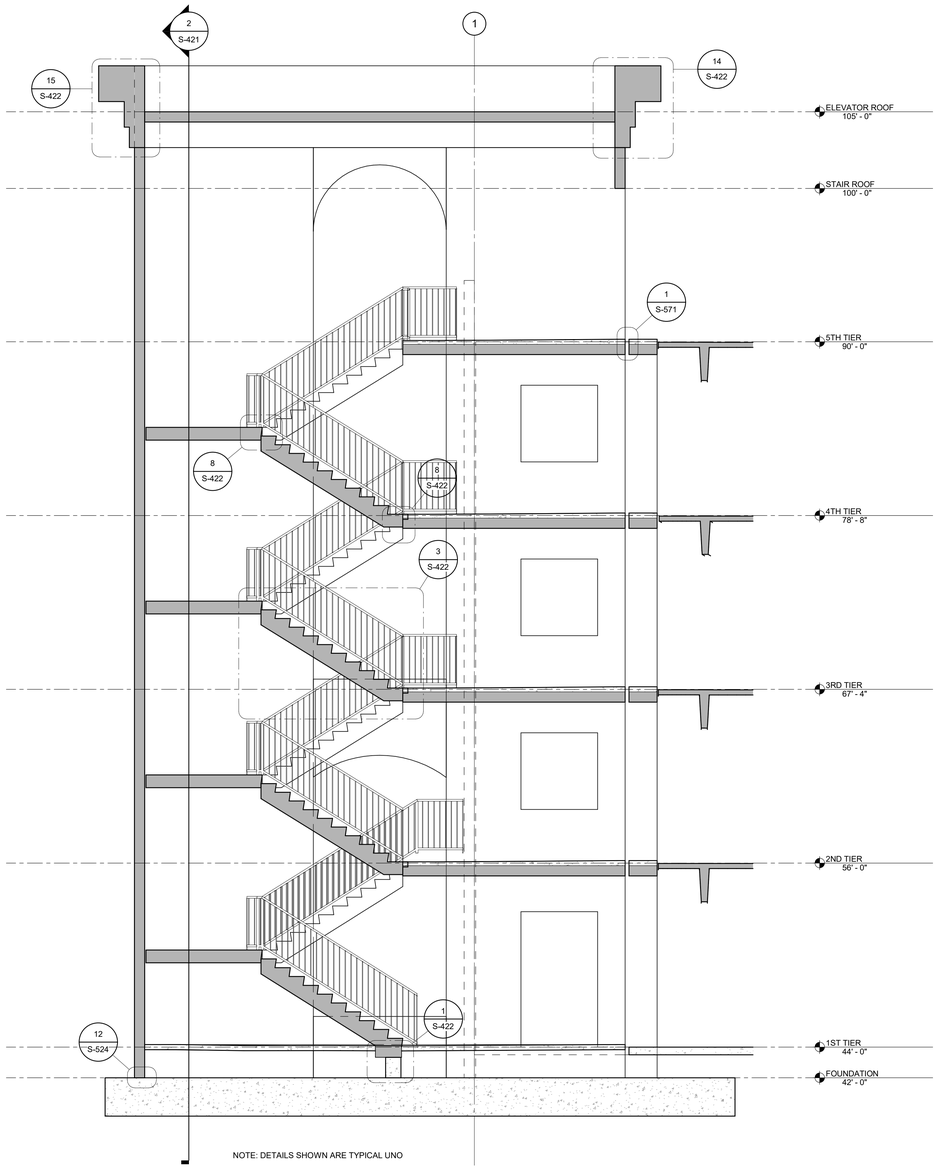

NOTE: DETAILS SHOWN ARE TYPICAL UNO

1 STAIR TOWER SECTION
1/4" = 1'-0"

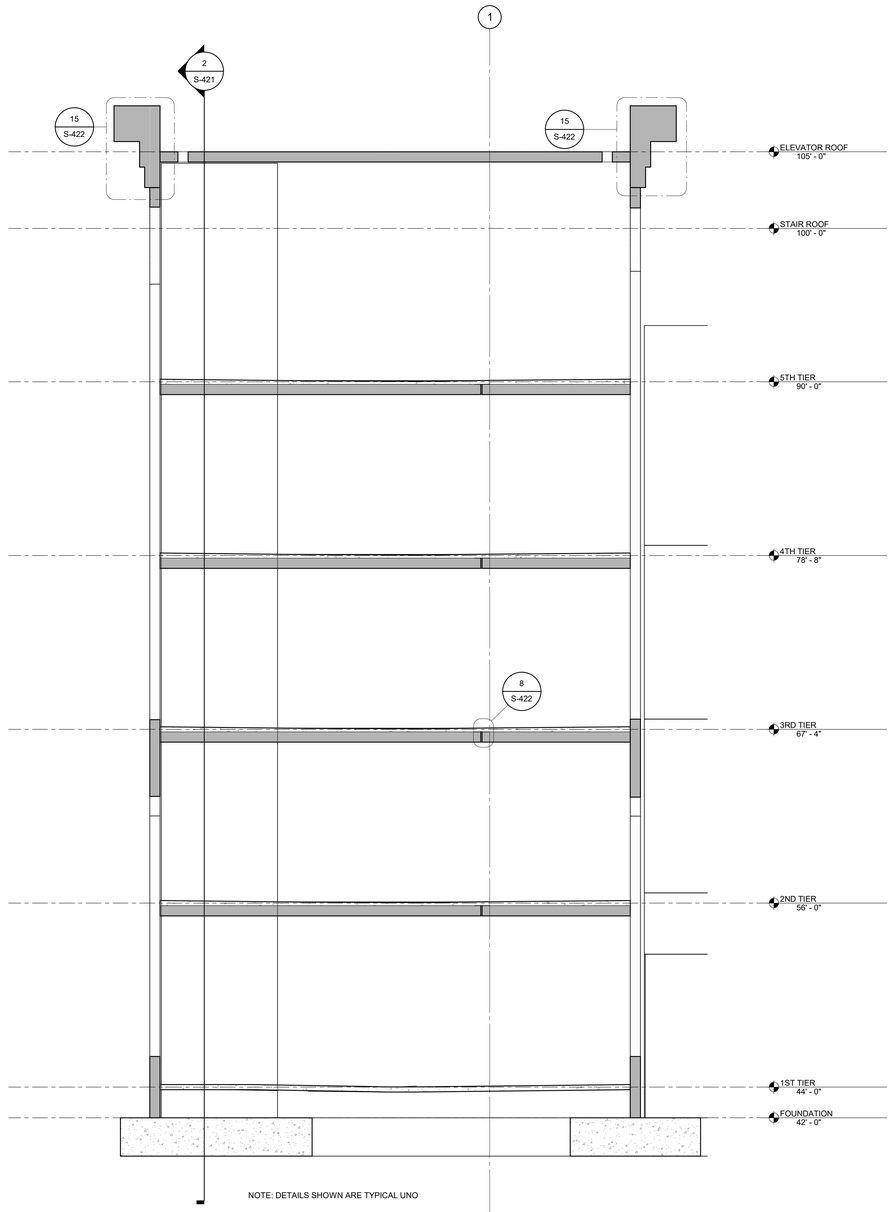

NOTE: DETAILS SHOWN ARE TYPICAL UNO

2 STAIR TOWER SECTION
1/4" = 1'-0"

UNCW
UNIVERSITY of NORTH CAROLINA WILMINGTON
601 S COLLEGE ROAD
WILMINGTON, NORTH CAROLINA 28403

PARKING DECK II AND SURFACE PARKING (DESIGN-BUILD)
SOUTH CAMPUS - 4965 RIEGEL ROAD

SCO ID NUMBER: 18-19226-01A
CODE: 41828
ITEM: 301

CONTRACTOR
Balfour Beatty Construction

DESIGNER
CLARKNEXSEN
1523 ELIZABETH AVENUE, SUITE 300
CHARLOTTE, NORTH CAROLINA 28204
704.377.8800

CLARK NEXSEN LICENSE NUMBER: C-1028

WALKER CONSULTANTS
13860 Ballantyne Corporate Place
Suite 140
Charlotte, NC 28277
T: 704.247.6230
www.walkerconsultants.com
NC License No. F-0518

McKIM&CREED
CIVIL ENGINEER
243 NORTH FRONT STREET
WILMINGTON, NORTH CAROLINA
28401
910.343.1048

PROFESSIONAL SEAL
NOT FOR CONSTRUCTION
NORTH CAROLINA PROFESSIONAL SEAL 028007 ENGINEER JOEY D. ROWLAND

SUBMITTAL
04/15/2019
CONSTRUCTION DOCUMENT SUBMITTAL 01

REVISIONS

KEY PLAN

SHEET
STAIR TOWER SECTIONS

S-420

DESIGN: Designer
DRAWN: Author
REVIEW: Checker

CN PROJECT NUMBER

4/15/2019 5:35:12 PM
C:\Revit Projects\UNC Wilmington Deck II_r17_roy.grantham.rvt

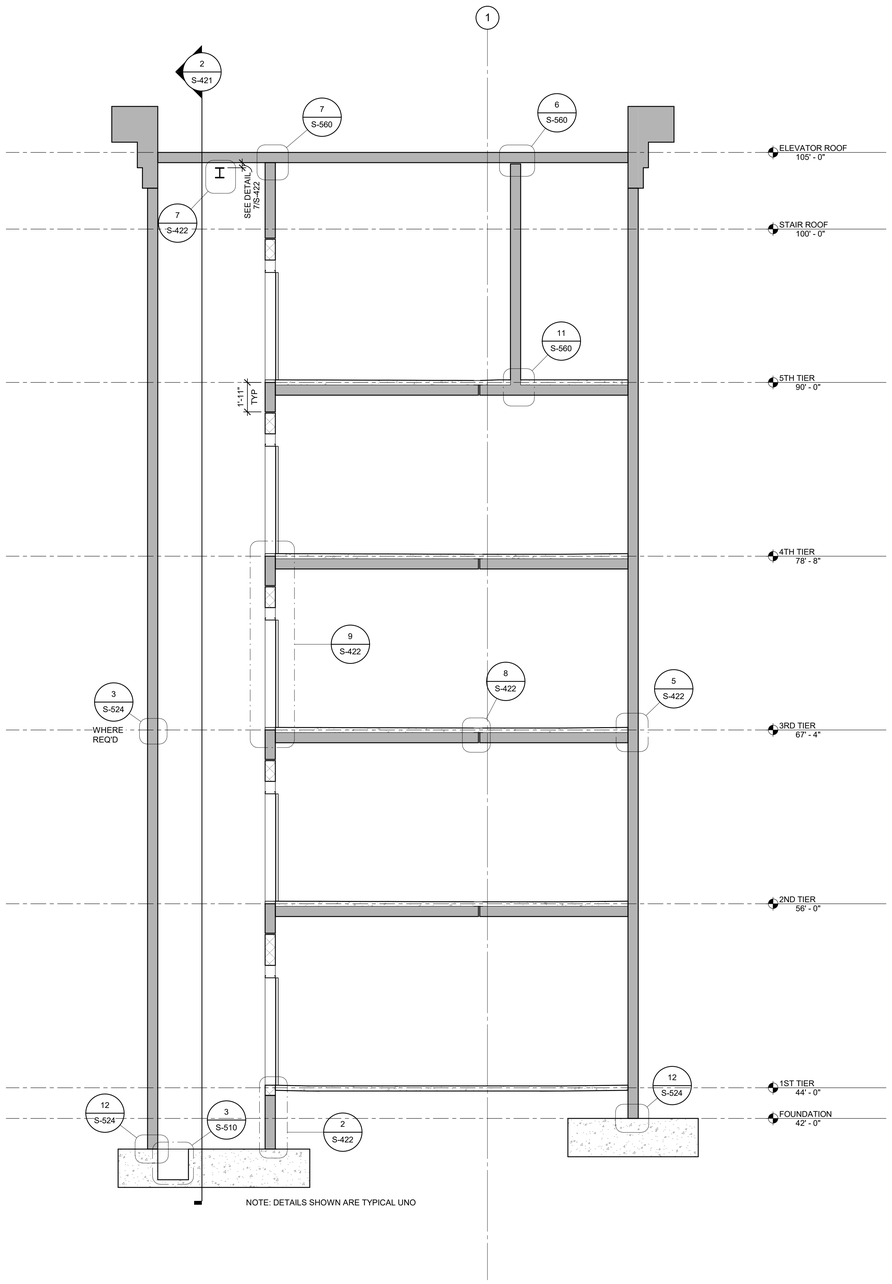

1 STAIR TOWER SECTION
1/4" = 1'-0"

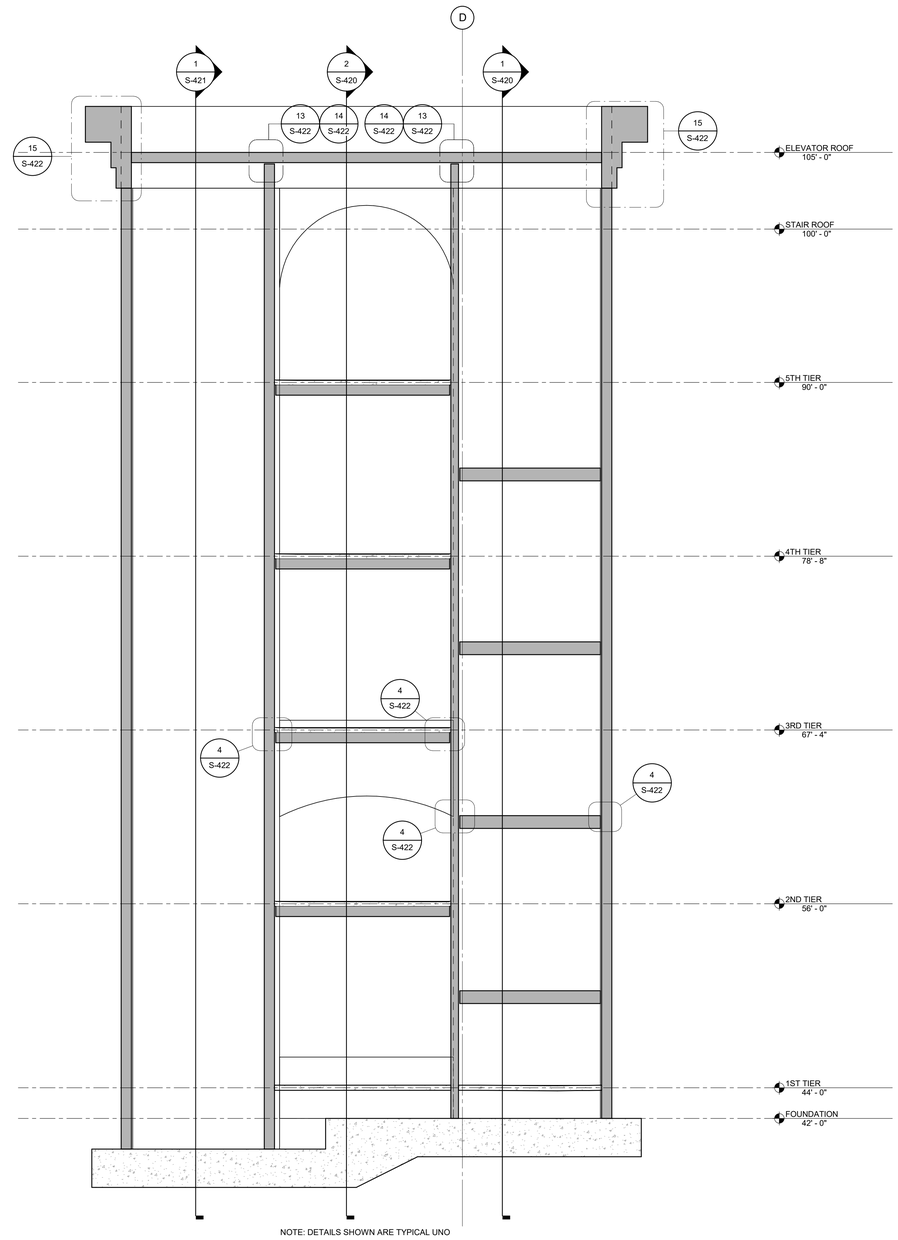

2 STAIR TOWER SECTION
1/4" = 1'-0"

UNCW
UNIVERSITY of NORTH CAROLINA WILMINGTON
601 S COLLEGE ROAD
WILMINGTON, NORTH CAROLINA 28403

PARKING DECK II AND SURFACE PARKING (DESIGN-BUILD)
SOUTH CAMPUS - 4965 RIEGEL ROAD

SCO ID NUMBER: 18-19226-01A
CODE: 41828
ITEM: 301

CONTRACTOR
Balfour Beatty Construction

DESIGNER
CLARKNEXSEN
1523 ELIZABETH AVENUE, SUITE 300
CHARLOTTE, NORTH CAROLINA 28204
704.377.8800

CLARK NEXSEN LICENSE NUMBER: C-1028

WALKER CONSULTANTS
13860 Ballantyne Corporate Place
Suite 140
Charlotte, NC 28277
T: 704.247.6230
www.walkerconsultants.com
NC License No. F-0518

McKIM&CREED
CIVIL ENGINEER
243 NORTH FRONT STREET
WILMINGTON, NORTH CAROLINA
28401
910.343.1048

PROFESSIONAL SEAL
NOT FOR CONSTRUCTION
NORTH CAROLINA PROFESSIONAL ENGINEER SEAL 028007 JOEY D. ROWLAND

SUBMITTAL
04/15/2019
CONSTRUCTION DOCUMENT SUBMITTAL 01

REVISIONS

KEY PLAN

SHEET
STAIR TOWER SECTIONS

S-421

DESIGN: Designer
DRAWN: Author
REVIEW: Checker

CN PROJECT NUMBER

4/15/2019 5:35:13 PM
C:\Revit Projects\UNC Wilmington Deck II_r17_ory.grantham.rvt

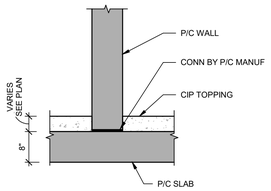

16 P/C WALL/SLAB
3/4" = 1'-0"

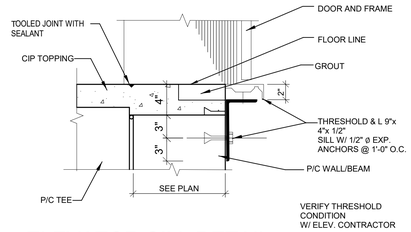

12 ELEVATOR SILL DETAIL
1 1/2" = 1'-0"

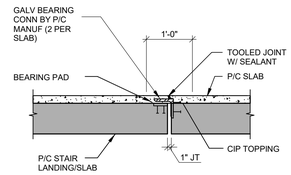

8 P/C STAIR/SLAB DETAIL
3/4" = 1'-0"

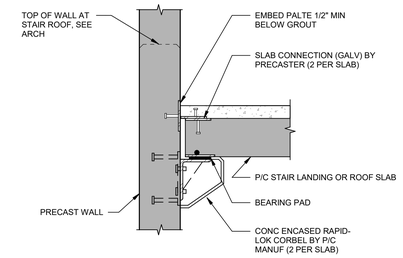

4 WALL/SLAB DETAIL
1" = 1'-0"

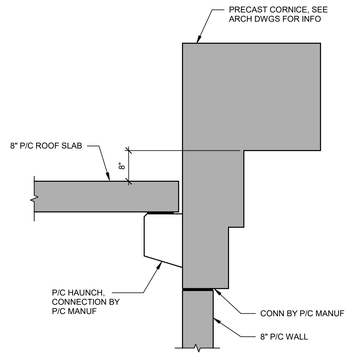

15 P/C CORNICE/SLAB DETAIL
3/4" = 1'-0"

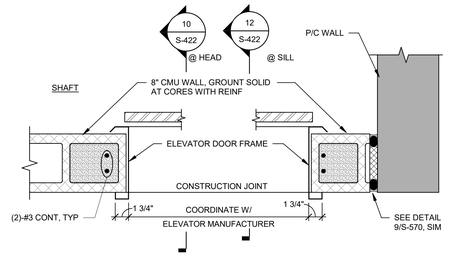

11 ELEVATOR JAMB DETAIL
1 1/2" = 1'-0"

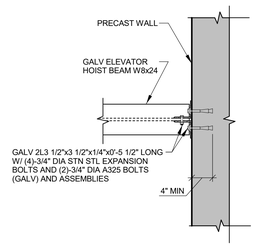

NOTES:
1. SET BEAM 4" BELOW ROOF SLAB.
2. P/C MANUF TO COODINATE HOIST BEAM BEARING CONDITION WITH ELEVATOR MANUF.

7 ELEVATOR HOIST BEAM DETAIL
1" = 1'-0"

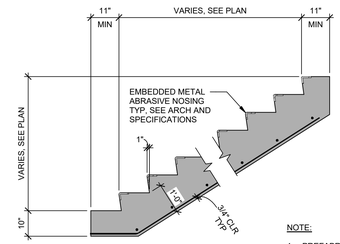

NOTE:
1. PREFABRICATED WWF ACCEPTABLE

PERFORMANCE DESIGN BY PRECASTER

3 TYPICAL STAIR SECTION
1/2" = 1'-0"

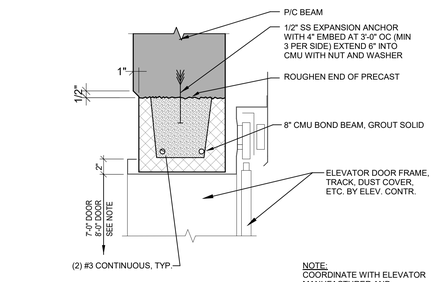

NOTE:
COORDINATE WITH ELEVATOR MANUFACTURER AND ARCHITECT FOR LOCATION

10 ELEVATOR HEAD DETAIL
1 1/2" = 1'-0"

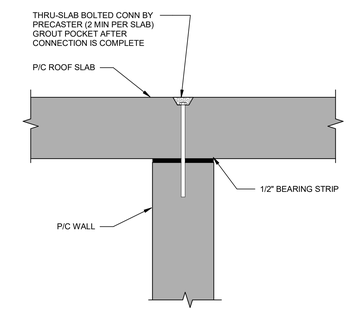

14 P/C SLAB/WALL DETAIL
1 1/2" = 1'-0"

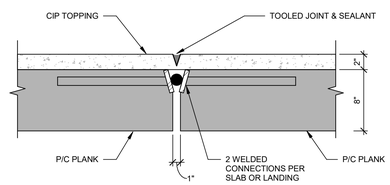

NOTE: ROUGHEN TOPPING BLOCKOUT FOR BOND

6 SLAB/SLAB DETAIL
1 1/2" = 1'-0"

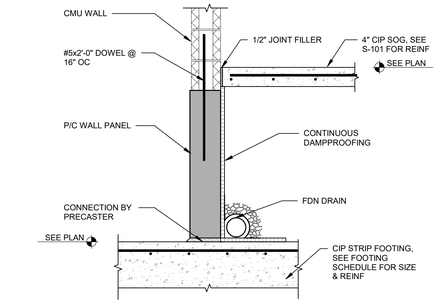

2 ELEVATOR FOUNDATION SECTION
3/4" = 1'-0"

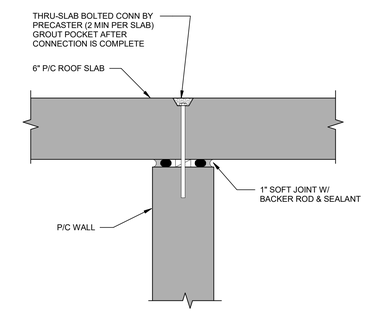

13 P/C SLAB/ROOF DETAIL
1 1/2" = 1'-0"

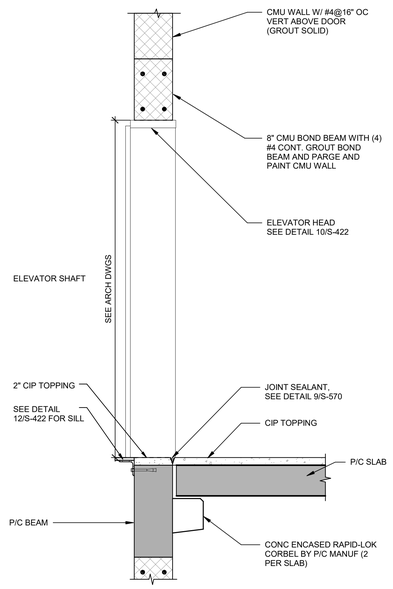

9 ELEVATOR DOOR SECTION
3/4" = 1'-0"

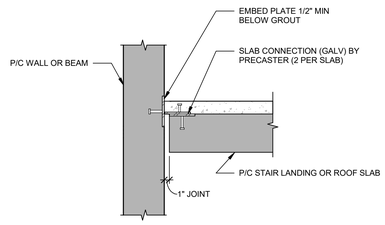

NOTES:
1. (2) CONNECTIONS PER SLAB

5 STAIR/BEAM DETAIL
1" = 1'-0"

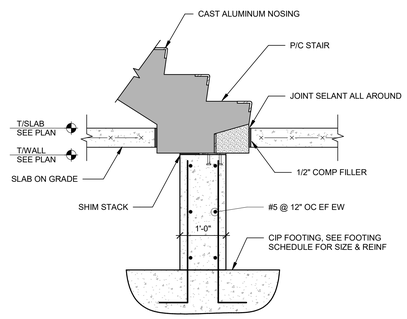

1 P/C STAIR/SLAB DETAIL
3/4" = 1'-0"

UNCW
UNIVERSITY of NORTH CAROLINA WILMINGTON
601 S COLLEGE ROAD
WILMINGTON, NORTH CAROLINA 28403

PARKING DECK II AND SURFACE PARKING (DESIGN-BUILD)
SOUTH CAMPUS - 4965 RIEGEL ROAD

SCO ID NUMBER: 18-19226-01A
CODE: 41828
ITEM: 301

CONTRACTOR
Balfour Beatty Construction

DESIGNER
CLARKNEXSEN
1523 ELIZABETH AVENUE, SUITE 300
CHARLOTTE, NORTH CAROLINA 28204
704.377.8800
CLARK NEXSEN LICENSE NUMBER: C-1028

WALKER CONSULTANTS
13860 Ballantyne Corporate Place
Suite 140
Charlotte, NC 28277
T: 704.247.6230
www.walkerconsultants.com
NC License No. F-0518

McKIM&CREED
CIVIL ENGINEER
243 NORTH FRONT STREET
WILMINGTON, NORTH CAROLINA
28401
910.343.1048

PROFESSIONAL SEAL
NOT FOR CONSTRUCTION
NORTH CAROLINA PROFESSIONAL SEAL 028007 ENGINEER JOEY D. ROWLAND

SUBMITTAL
04/15/2019
CONSTRUCTION DOCUMENT SUBMITTAL 01

REVISIONS

KEY PLAN

SHEET
STAIR TOWER SECTIONS & DETAILS

S-422

DESIGN: Designer
DRAWN: Author
REVIEW: Checker

CN PROJECT NUMBER

4/15/2019 5:35:16 PM
C:\Revit Projects\UNC Wilmington Deck II_r17_rsy.grantham.rvt

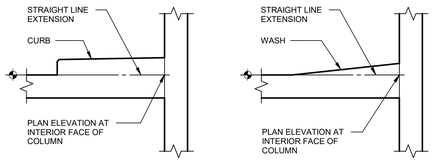

NOTE:
1. DETAILS APPLY TO SLAB-ON-GRADE AND SUPPORTED SLABS, UNLESS OTHERWISE NOTED.

12 ARCHITECTURAL / STRUCTURAL PLAN ELEVATION KEY (P/T)

3/4" = 1'-0"

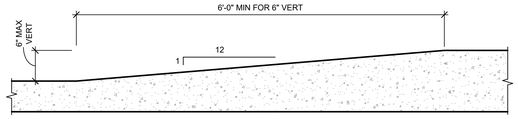

REFERENCED REGULATIONS AND STANDARDS

1. CHANGES IN LEVEL LESS THAN 1/2" AND 6".
   A. REFER TO REFERENCED STANDARDS FOR ADDITIONAL REQUIREMENTS.
   B. MAXIMUM SLOPE ON RAMP SURFACE IS 8.33%.
2. ADA-ACCESSIBILITY GUIDELINES RAMP SECTION 405 AND CURB RAMPS SECTION 406.
3. ASTM F1637-02 STANDARD PRACTICE FOR SAFE WALKING SURFACES. CHANGES IN LEVEL GREATER THAN 1/2" IN SECTION 5.2.4.
4. REFER TO SPECIFICATIONS FOR ADDITIONAL REQUIREMENTS.

8 VERTICAL CHANGE IN LEVEL

NTS

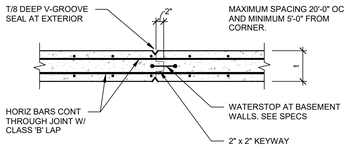

5 WALL CONSTRUCTION JOINT

NTS

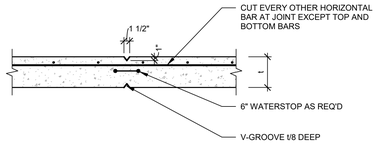

NOTE:
1. JOINT SPACING: 20'-0" MAXIMUM AND NO MORE THAN 10'-0" FROM CORNER.

4 VERTICAL WALL CONTROL JOINT

NTS

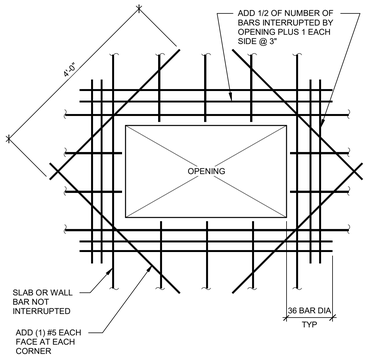

7 TYPICAL SLAB/WALL OPENING

NTS

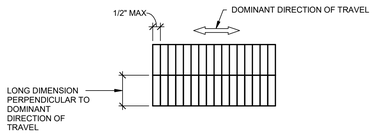

REFERENCED REGULATIONS AND STANDARDS

1. OPENINGS IN FLOOR OR GROUND SURFACES SHALL NOT ALLOW PASSAGE OF A SPHERE OF MORE THAN 1/2" DIA EXCEPT AS ALLOWED FOR ELEVATORS ADA 409.4.3. AND ADA 407.4.3. AND PLATFORM LIFTS ADA 410.4.
2. ADA-ACCESSIBILITY GUIDELINES FIGURE 303.2 ELONGATED OPENINGS IN FLOOR OR GROUND SURFACES.
3. ASTM F1637-02 STANDARD PRACTICE FOR SAFE WALKING SURFACES IN SECTION 10.
4. REFER TO SPECIFICATIONS FOR ADDITIONAL REQUIREMENTS.

11 OPENINGS IN FLOOR SURFACES

NTS

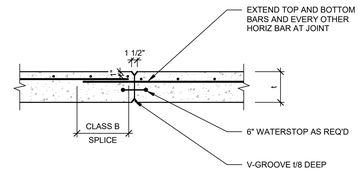

3 VERTICAL WALL CONSTRUCTION JOINT

NTS

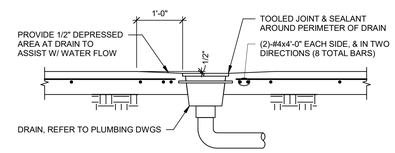

14 DRAIN ON GRADE DETAIL

3/4" = 1'-0"

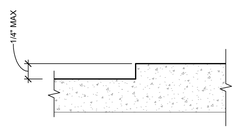

REFERENCED REGULATIONS AND STANDARDS

1. CHANGES IN LEVEL LESS THAN 1/4".
2. ADA-ACCESSIBILITY GUIDELINES FIGURE 303.2 CHANGE IN LEVEL FIG. 1
3. ASTM F1637-02 STANDARD PRACTICE FOR SAFE WALKING SURFACES IN SECTION 5.2.2.
4. REFER TO SPECIFICATIONS FOR ADDITIONAL REQUIREMENTS.

10 VERTICAL CHANGE IN LEVEL

NTS

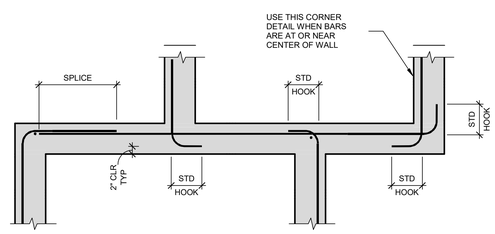

SINGLE LAYER BARS - ONE FACE OR CENTER LAYER
PLAN VIEW

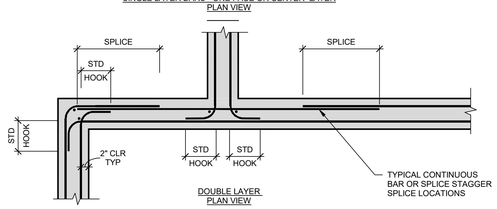

DOUBLE LAYER
PLAN VIEW

6 CORNER REINFORCEMENT

3/4" = 1'-0"

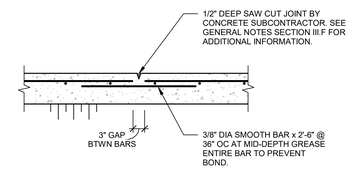

2 SLAB CONTROL JOINT

NTS

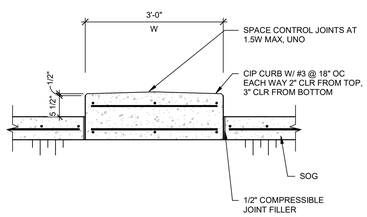

13 CURB DETAIL

3/4" = 1'-0"

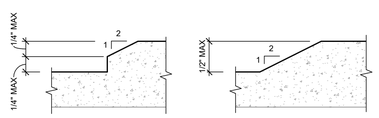

REFERENCED REGULATIONS AND STANDARDS

1. CHANGES IN LEVEL BETWEEN 1/4" AND 1/2".
2. ADA-ACCESSIBILITY GUIDELINES FIGURE 303.2 BEVELED CHANGE IN LEVEL.
3. ASTM F1637-02 STANDARD PRACTICE FOR SAFE WALKING SURFACES IN SECTION 5.2.3.
4. REFER TO SPECIFICATIONS FOR ADDITIONAL REQUIREMENTS.

9 VERTICAL CHANGE IN LEVEL

NTS

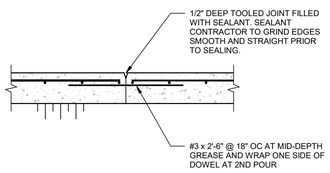

1 SLAB CONSTRUCTION JOINT

NTS

UNCW
UNIVERSITY of NORTH CAROLINA WILMINGTON
601 S COLLEGE ROAD
WILMINGTON, NORTH CAROLINA 28403

PARKING DECK II AND SURFACE PARKING (DESIGN-BUILD)
SOUTH CAMPUS - 4965 RIEGEL ROAD

SCO ID NUMBER: 18-19226-01A
CODE: 41828
ITEM: 301

CONTRACTOR
Balfour Beatty Construction

DESIGNER
CLARKNEXSEN
1523 ELIZABETH AVENUE, SUITE 300
CHARLOTTE, NORTH CAROLINA 28204
704.377.8800
CLARK NEXSEN LICENSE NUMBER: C-1028

WALKER CONSULTANTS
13860 Ballantyne Corporate Place
Suite 140
Charlotte, NC 28277
T: 704.247.6230
www.walkerconsultants.com
NC License No. F-0518

McKIM&CREED
CIVIL ENGINEER
243 NORTH FRONT STREET
WILMINGTON, NORTH CAROLINA
28401
910.343.1048

PROFESSIONAL SEAL

NOT FOR CONSTRUCTION
NORTH CAROLINA PROFESSIONAL SEAL 028007 ENGINEER JOEY D. ROWLAND

SUBMITTAL
04/15/2019
CONSTRUCTION DOCUMENT SUBMITTAL 01

REVISIONS

KEY PLAN

SHEET
TYPICAL DETAILS

S-501

DESIGN: Designer
DRAWN: Author
REVIEW: Checker

CN PROJECT NUMBER

4/15/2019 5:35:17 PM
C:\Revit Projects\UNC Wilmington Deck II_r17_rey.grantham.rvt

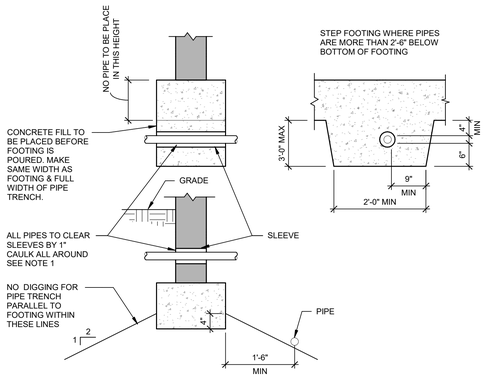

NOTE:
1. INCREASE CLEARANCE IF REQUIRED PER SETTLEMENT REQUIREMENTS.

4 PIPE @ WALL & FOOTING DETAIL

3/4" = 1'-0"

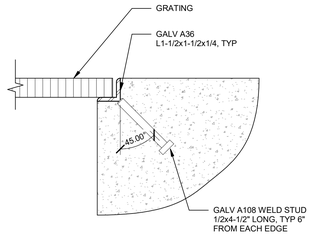

7 SUMP PIT ANGLE SUPPORT SECTION

3" = 1'-0"

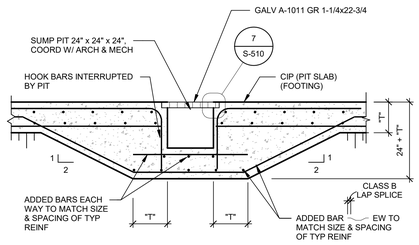

3 SUMP PIT DETAIL

3/4" = 1'-0"

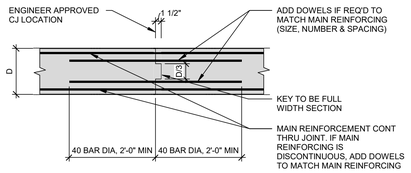

6 CONSTRUCTION JOINT AT STRIP FOOTING

3/4" = 1'-0"

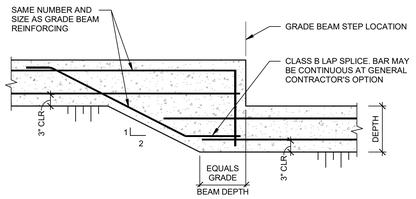

NOTES:
1. GRADE BEAM SHALL STEP A MAXIMUM OF 2'-0" VERTICAL IN 4'-0" HORIZONTAL
2. SEE GRADE BEAM SCHEDULE ON S-601 FOR DEPTH DIMENSION.
3. SEE PLAN FOR GRADE BEAM STEP LOCATIONS.

2 STEP FOOTING DETAIL

3/4" = 1'-0"

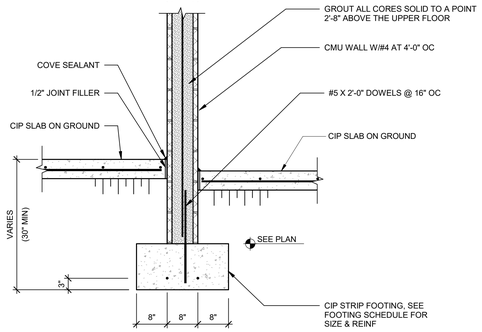

5 MASONRY WALL DETAIL

3/4" = 1'-0"

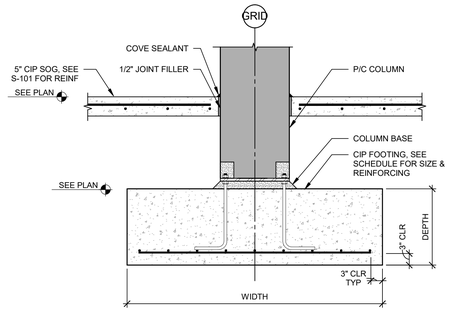

NOTE:
1. PRECAST COLUMN TO FOOTING SHOWN.

1 COLUMN/FOOTING DETAIL

3/4" = 1'-0"

UNCW
UNIVERSITY of NORTH CAROLINA WILMINGTON
601 S COLLEGE ROAD
WILMINGTON, NORTH CAROLINA 28403

PARKING DECK II AND SURFACE PARKING (DESIGN-BUILD)
SOUTH CAMPUS - 4965 RIEGEL ROAD

SCO ID NUMBER: 18-19226-01A
CODE: 41828
ITEM: 301

CONTRACTOR
Balfour Beatty Construction

DESIGNER
CLARKNEXSEN
1523 ELIZABETH AVENUE, SUITE 300
CHARLOTTE, NORTH CAROLINA 28204
704·377·8800

CLARK NEXSEN LICENSE NUMBER: C-1028

WALKER CONSULTANTS
13860 Ballantyne Corporate Place
Suite 140
Charlotte, NC 28277
T: 704.247.6230
www.walkerconsultants.com
NC License No. F-0518

McKIM&CREED
CIVIL ENGINEER
243 NORTH FRONT STREET
WILMINGTON, NORTH CAROLINA
28401
910.343.1048

PROFESSIONAL SEAL
NOT FOR CONSTRUCTION
NORTH CAROLINA PROFESSIONAL SEAL 028007 ENGINEER JOEY D. ROWLAND

SUBMITTAL
04/15/2019
CONSTRUCTION DOCUMENT SUBMITTAL 01

REVISIONS

KEY PLAN

SHEET
FOUNDATION DETAILS

S-510

DESIGN: Designer
DRAWN: Author
REVIEW: Checker

CN PROJECT NUMBER

4/15/2019 5:35:19 PM
C:\Revit Projects\UNC-Wilmington Deck II_r17_my.grantham.rvt

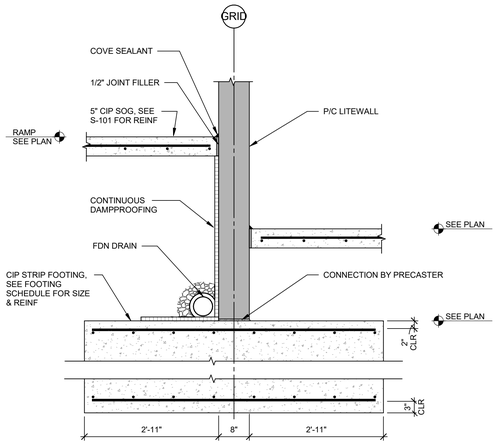

9 FOUNDATION SECTION
3/4" = 1'-0"

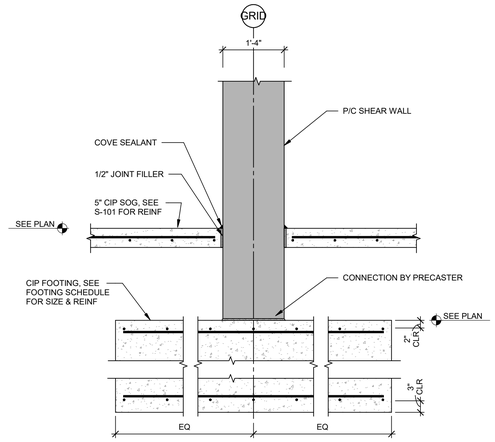

6 FOUNDATION SECTION
3/4" = 1'-0"

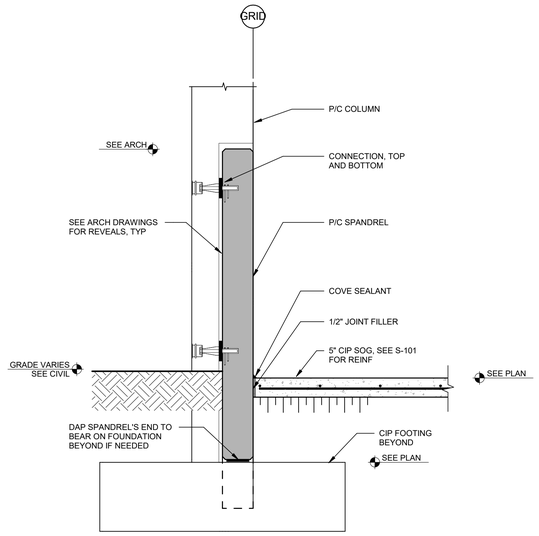

3 GRADE SPANDREL DETAIL
3/4" = 1'-0"

8 NOT USED
3/4" = 1'-0"

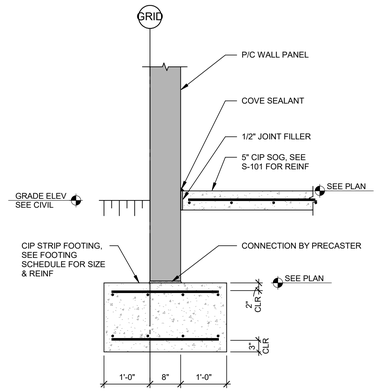

5 FOUNDATION SECTION
3/4" = 1'-0"

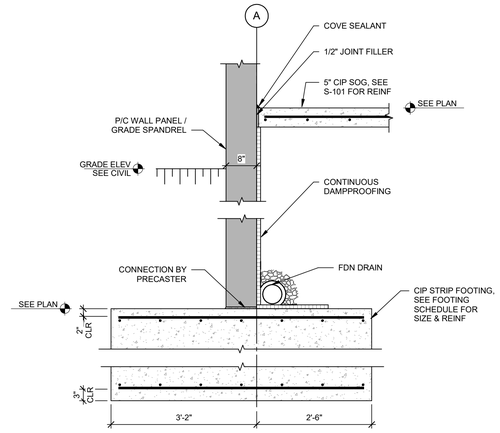

2 FOUNDATION SECTION
3/4" = 1'-0"

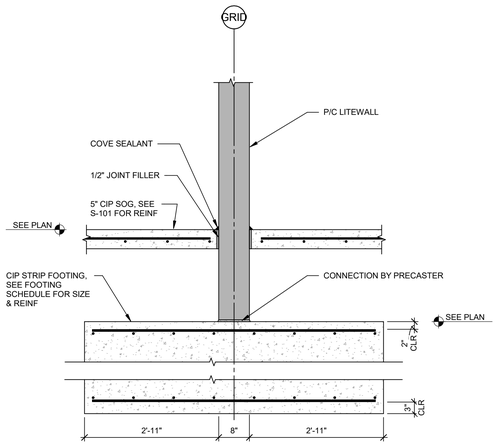

7 FOUNDATION SECTION
3/4" = 1'-0"

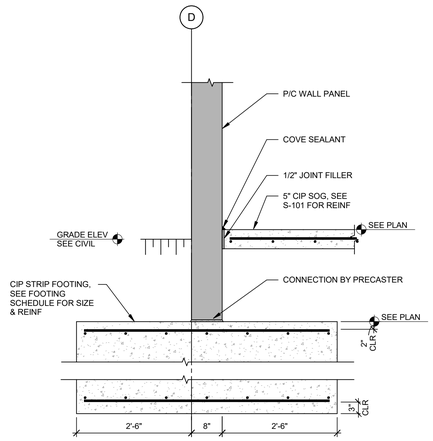

4 FOUNDATION SECTION
3/4" = 1'-0"

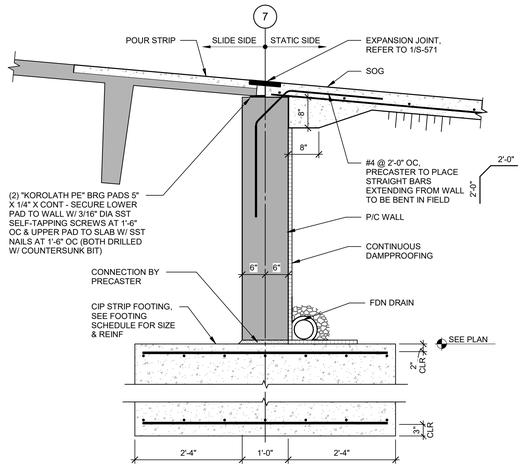

1 TRANSITION WALL FOUNDATION SECTION
3/4" = 1'-0"

UNCW
UNIVERSITY of NORTH CAROLINA WILMINGTON
601 S COLLEGE ROAD
WILMINGTON, NORTH CAROLINA 28403

PARKING DECK II AND SURFACE PARKING (DESIGN-BUILD)
SOUTH CAMPUS - 4965 RIEGEL ROAD

SCO ID NUMBER: 18-19226-01A
CODE: 41828
ITEM: 301

CONTRACTOR
Balfour Beatty Construction

DESIGNER
CLARKNEXSEN
1523 ELIZABETH AVENUE, SUITE 300
CHARLOTTE, NORTH CAROLINA 28204
704·377·8800
CLARK NEXSEN LICENSE NUMBER: C-1028

WALKER CONSULTANTS
13860 Ballantyne Corporate Place
Suite 140
Charlotte, NC 28277
T: 704.247.6230
www.walkerconsultants.com
NC License No. F-0518

McKIM&CREED
CIVIL ENGINEER
243 NORTH FRONT STREET
WILMINGTON, NORTH CAROLINA
28401
910.343.1048

PROFESSIONAL SEAL
NOT FOR CONSTRUCTION
NORTH CAROLINA PROFESSIONAL SEAL 028007 ENGINEER JOEY D. ROWLAND

SUBMITTAL
04/15/2019
CONSTRUCTION DOCUMENT SUBMITTAL 01

REVISIONS

KEY PLAN

SHEET
FOUNDATION DETAILS

S-511

DESIGN: Designer
DRAWN: Author
REVIEW: Checker

CN PROJECT NUMBER

4/15/2019 5:35:21 PM
C:\Revit Projects\UNC Wilmington Deck II_r17_my.grantham.rvt

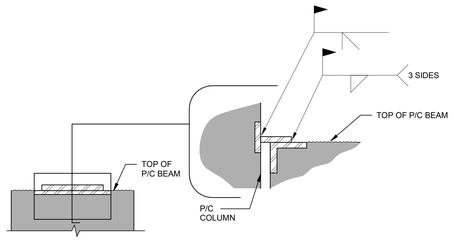

8 CONNECTION DETAIL PERFORMANCE DESIGN

NTS

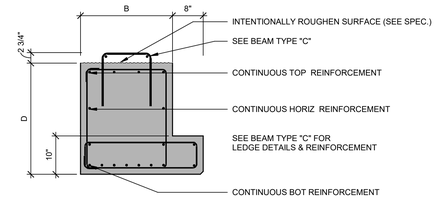

NOTE:
EQUIVALENT PREFABRICATED WWF ACCEPTABLE

4 BEAM TYPE "D"

NTS

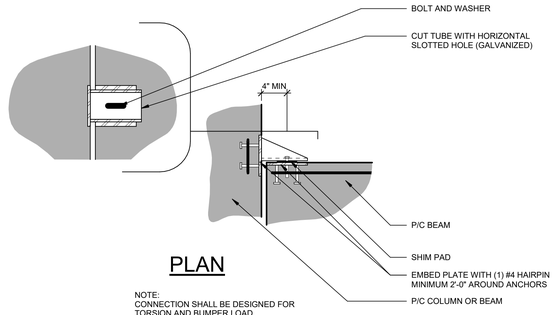

PLAN

NOTE:
CONNECTION SHALL BE DESIGNED FOR
TORSION AND BUMPER LOAD.

7 BEAM/COLUMN CONNECTION DETAIL PERFORMANCE DESIGN

NTS

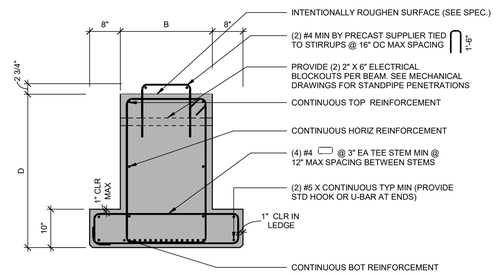

NOTE:
EQUIVALENT PREFABRICATED WWF ACCEPTABLE

3 BEAM TYPE "C"

NTS

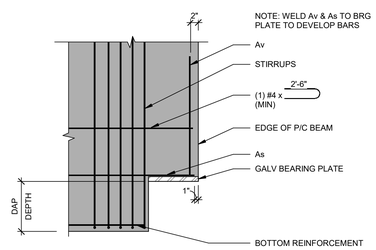

NOTES:
1. SEE PRECAST EMBED SCHEDULE FOR MATERIALS.
2. EQUIVALENT PREFABRICATED WWF ACCEPTABLE.

6 END OF BEAM REINFORCEMENT DETAIL

NTS

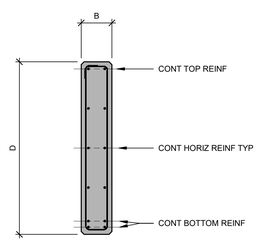

NOTE:
EQUIVALENT PREFABRICATED WWF ACCEPTABLE

2 BEAM TYPE "B"

NTS

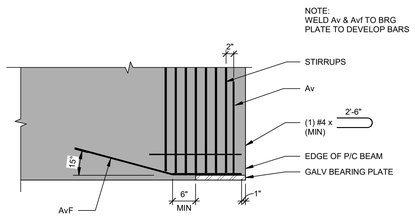

NOTES:
1. SEE PRECAST EMBED SCHEDULE FOR MATERIALS.
2. EQUIVALENT PREFABRICATED WWF ACCEPTABLE.

5 END OF BEAM REINFORCEMENT (UNDAPPED TEE) DETAIL

NTS

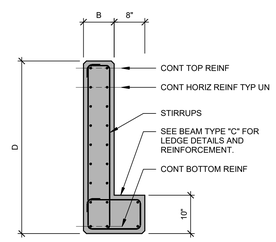

NOTE:
EQUIVALENT PREFABRICATED WWF ACCEPTABLE

1 BEAM TYPE "A"

NTS

SHEET NOTES

PRECAST BEAM NOTES:

1. FOR GENERAL NOTES, SEE SHEET S-001.
2. BEAM DESIGN IS PERFORMANCE DESIGN AND SHALL INCLUDE TYPE, NUMBER, AND LOCATION OF STRANDS AND/OR CONVENTIONAL REINFORCEMENT AS WELL AS LEDGE, SHEAR/TORSION AND END OF BEAM REINFORCEMENT. DESIGN SHALL ALSO INCLUDE ALL BEAM TO COLUMN (OR OTHER SUPPORT) CONNECTIONS. SEE SPECIFICATION SECTION 034100 FOR PRECAST CONCRETE.
3. APPLY MASTIC TO EACH STRAND AT ENDS OF BEAM.
4. FOR MEMBER SIZES AND OTHER INFORMATION, SEE STRUCTURAL AND ARCHITECTURAL DETAILS.
5. SEE MECHANICAL AND ELECTRICAL DRAWINGS FOR ANY REQUIRED PENETRATIONS.
6. POCKETED BEAMS SHALL BE PRESTRESSED TO A MINIMUM P/A OF 150 psi.
7. FOR EMBEDDED PLATES TO RECEIVE WELDS AS PART OF WELDED CONNECTIONS, SEE 7/S-524 .
8. FOR SEALANT REQUIREMENTS AT SPANDREL PANEL/BEAM/COLUMN INTERFACES, REFER TO DETAILS ON SHEET S-570.
9. PROVIDE OPENINGS AT APPROXIMATELY MID-DEPTH OF STEMS OF INVERTED TEE (DOUBLE LEDGER) BEAMS. PLACE NO CLOSER THAN 9'-0" FROM END OF BEAM. COORDINATE SIZE AND LOCATION REQUIREMENTS WITH MECHANICAL AND ELECTRICAL.

PRECAST EMBEDMENT SCHEDULE			
PROD.	CONNECTION HARDWARE		EXCEPTIONS
TEE	BEARING PLATE	HDG	
	EMBED AT TOP CONNECTION	HDG	
	FLANGE WELDER EMBED	SS	
	EMBED AT EXPANSION JOINT	HDG	
BEAM	BEARING PLATE	HDG	
	EMBED TO TOP CONNECTION	HDG	
INT. SPA.	BEARING PLATE	HDG	
	EMBED AT CONNECTION w/COL.	HDG	
	EMBED AT CONNECTION w/WALL	HDG	
	EMBED AT CONNECTION w/TEE	HDG	
EXT. SPA.	BEARING PLATE	HDG	
	EMBED AT CONNECTION w/COL.	HDG	
	EMBED AT CONNECTION w/WALL	HDG	
	EMBED AT CONNECTION w/TEE	HDG	
COL.	BASE PLATE	PS	
	TOP PLATE/HAUNCH	HDG	
	HAUNCH ASSEMBLY	HDG	
	EMBED AT CONNECTION w/TEE	HDG	
	EMBED AT CONNECTION w/EXT. SPA.	HDG	
	EMBED AT CONNECTION w/INT. SPA.	HDG	
	EMBED AT CONNECTION w/WALL	HDG	
	EMBED AT CONNECTION w/BM.	HDG	
STRUC. WALL	EMBED AT CONNECTION w/TEE	HDG	
	EMBED AT CONNECTION w/BEAM	HDG	
	EMBED AT CONNECTION w/WALL	HDG	
	EMBED AT CONNECTION w/COL.	HDG	
	EMBED AT CONNECTION w/FOUNDATION	HDG	
ARCH. WALL	EMBED AT CONNECTION w/TEE	HDG	
	EMBED AT CONNECTION w/BEAM	HDG	
	EMBED AT CONNECTION w/WALL	HDG	
	EMBED AT CONNECTION w/COL.	HDG	
	EMBED AT CONNECTION w/FOUNDATION	HDG	
FLAT SLABS	EMBED AT CONNECTION w/BEAM	HDG	
(RISER)	EMBED AT CONNECTION w/COL.	HDG	
	EMBED AT CONNECTION w/SLAB	HDG	
	BEARING PLATES	HDG	
LOOSE MTL.	TEE TO TEE WELDER	SS	
	TEE TO BEAM	HDG	
	TEE TO SPANDREL	HDG	
	TEE TO COLUMN	HDG	
	TEE TO WALL	HDG	
	BEAM TOP	HDG	
	BEAM BOTTOM (CUBE)	HDG	
	SPANDREL TOP	HDG	
	SPANDREL BOTTOM	HDG	
	ANCHOR BOLTS	PS	
	OTHER FOUNDATION EMBEDS	HDG	
SPL. INFO.			
ABBREVIATIONS :	PS. = PLAIN STEEL	SS = STAINLESS STEEL	
	HDG. = HOT DIP GALVANIZED	ZRC. = ZINC RICH COATING	

PRECAST BEAM SCHEDULE			
MARK	WIDTH (W)	DEPTH (D)	REMARKS
	8"		
24IT36	2' - 0"	3' - 0"	

UNCW
UNIVERSITY of NORTH CAROLINA WILMINGTON
601 S COLLEGE ROAD
WILMINGTON, NORTH CAROLINA 28403

PARKING DECK II AND SURFACE PARKING (DESIGN-BUILD)
SOUTH CAMPUS - 4965 RIEGEL ROAD

SCO ID NUMBER: 18-19226-01A
CODE: 41828
ITEM: 301

CONTRACTOR
Balfour Beatty Construction

DESIGNER

CLARKNEXSEN
1523 ELIZABETH AVENUE, SUITE 300
CHARLOTTE, NORTH CAROLINA 28204
704.377.8800
CLARK NEXSEN LICENSE NUMBER: C-1028

WALKER CONSULTANTS
13860 Ballantyne Corporate Place
Suite 140
Charlotte, NC 28277
T: 704.247.6230
www.walkerconsultants.com
NC License No. F-0518

McKIM&CREED
CIVIL ENGINEER
243 NORTH FRONT STREET
WILMINGTON, NORTH CAROLINA
28401
910.343.1048

PROFESSIONAL SEAL
NOT FOR CONSTRUCTION
NORTH CAROLINA PROFESSIONAL SEAL 028007 ENGINEER JOEL D. ROWLAND

SUBMITTAL
04/15/2019
CONSTRUCTION DOCUMENT SUBMITTAL 01

REVISIONS

KEY PLAN

SHEET
P/C BEAM DETAILS

S-520

DESIGN: Designer
DRAWN: Author
REVIEW: Checker

CN PROJECT NUMBER

4/15/2019 5:35:25 PM
C:\Revit Projects\UNC Wilmington Deck II_r17_csy.grantham.rvt

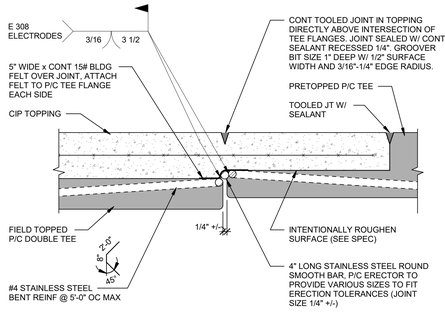

NOTES:
1. RECOMMEND USING GMAW PROCEDURE TO REDUCE SLAG.
2. TO ALLEVIATE CRACKING, CONSIDER USING SMALLER WELD PASSES.
3. OBSERVATION AND VERIFICATION OF WELDING PROCEDURES BY A TESTING AGENCY IS RECOMMENDED. PARTICULARLY FOR INITIAL INSTALLATION OF TEE-TO-TEE CONNECTIONS.

9 TEE/TEE JOINT DETAIL FIELD TOPPED TEES & PRETOPPED TEES

NTS

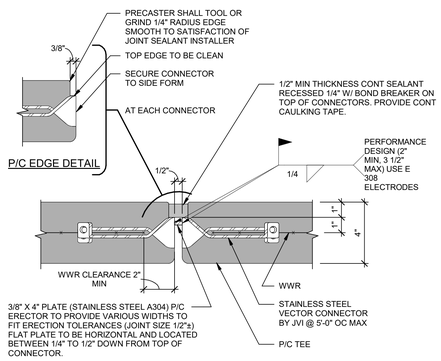

NOTES:
1. CENTER WELD FIELD PLATE ALONG FACEPLATE OF CONNECTOR. DO NOT WELD AT CORNERS.
2. CAUTION: DO NOT OVER WELD; 3 1/2" MAXIMUM WELD LENGTH. TOO MUCH WELDING HEAT WILL CRACK THE TEE FLANGES. PRECAST ERECTOR SHALL BE RESPONSIBLE FOR COST OF REPAIRING AND RESEALING CRACKED CONCRETE AROUND WELDS FOR A PERIOD OF TWO YEARS AFTER FINAL COMPLETION OF STRUCTURE.
3. RECOMMEND USING GMAW PROCEDURES TO REDUCE SLAG.
4. TO ALLEVIATE CRACKING, CONSIDER USING SMALLER WELD PASSES.
5. OBSERVATION AND VERIFICATION OF WELDING PROCEDURES BY A TESTING AGENCY OR MANUFACTURER IS RECOMMENDED, PARTICULARLY FOR INITIAL INSTALLATION OF TEE-TO-TEE CONNECTIONS.

8 TEE/TEE JOINT DETAIL AT PRETOPPED TEES

NTS

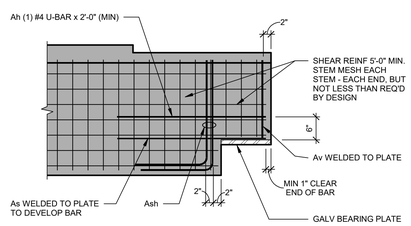

NOTES:
1. EQUIVALENT PREFABRICATED WWF ACCEPTABLE
2. SEE PRECAST EMBED SCHEDULE FOR MATERIALS

7 END OF TEE REINFORCEMENT (DAPPED TEE) DETAIL

NTS

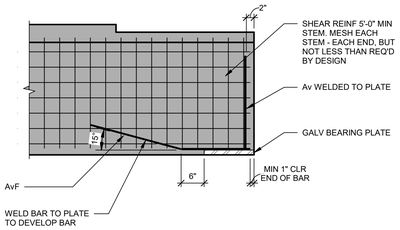

NOTES:
1. EQUIVALENT PREFABRICATED WWF ACCEPTABLE
2. SEE PRECAST EMBED SCHEDULE FOR MATERIALS

6 END OF TEE REINFORCEMENT (UNDAPPED TEE) DETAIL

NTS

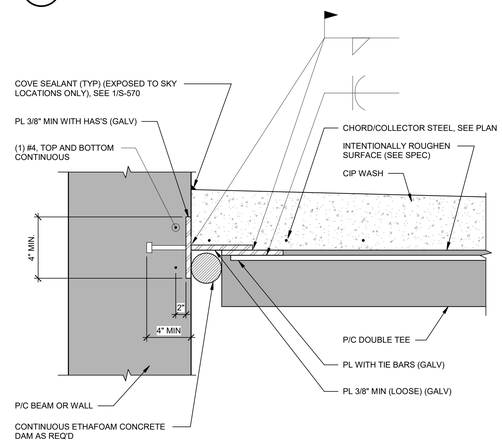

NOTES:
1. PROVIDE CONNECTION AT 4'-0" OC AT SPANDRELS, DECREASE SPACING AT SHEAR WALLS AS REQUIRED FOR LATERAL LOADS.
2. PRECASTER CAN PROPOSE ALTERNATE DETAIL FOR ENGINEER REVIEW.
3. TOUCH UP WELDS WITH MINIMUM 2 COATS ZINC PRIMER.

5 TOPPING DETAIL

NTS

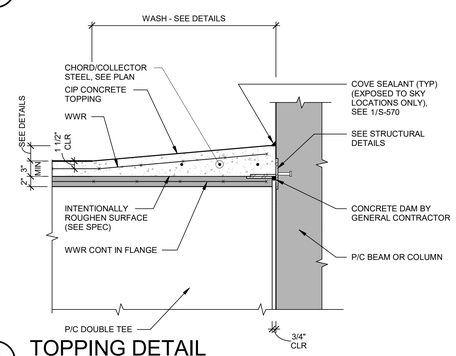

4 TOPPING DETAIL

NTS

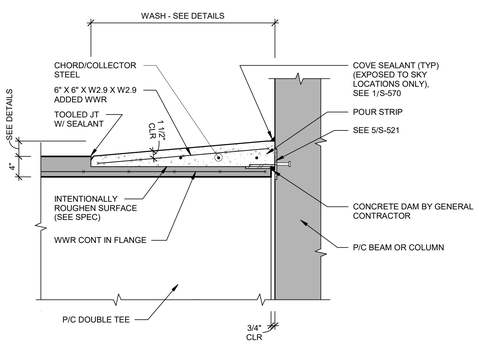

3 TYPICAL POUR STRIP DETAIL

NTS

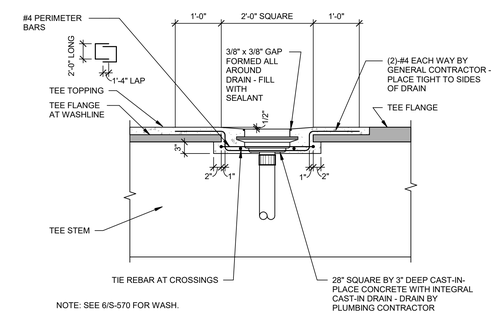

NOTE: SEE 6/S-570 FOR WASH.

2 DRAIN INSTALLATION DETAIL P/C CONSTRUCTION

NTS

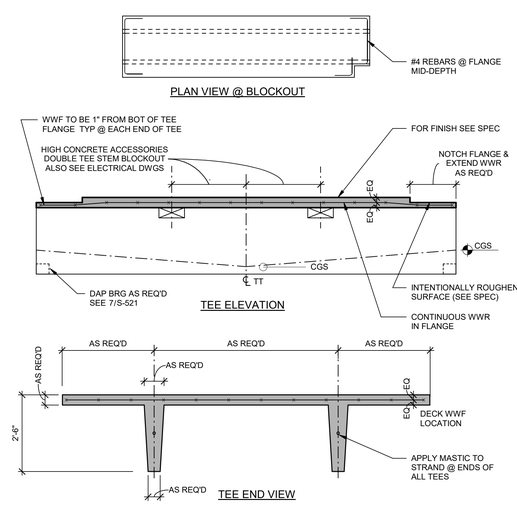

1 TYPICAL PRECAST TEE DETAIL (PRETOPPED TEES)

NTS

SHEET NOTES

PRECAST TEE NOTES:

1. FOR GENERAL NOTES, SEE SHEET S-001.
2. TEE DESIGN IS PERFORMANCE DESIGN AND SHALL INCLUDE TYPE, NUMBER AND LOCATION OF STRANDS AS WELL AS SHEAR, FLANGE, AND END OF TEE REINFORCEMENT. SEE SPECIFICATION SECTION 034100 FOR PRECAST CONCRETE. MINIMUM PRECAST TEE FLANGE AND TOPPING REINFORCEMENT SHALL BE AS FOLLOWS:
   A. PRETOPPED TEE FLANGE: WWF 12X4 - W4XW4
   B. TOPPED TEE FLANGE: WWF 12X6 - W2.9XW2.9
   C. 3" TOPPING: WWF 12X4 - W4XW4
   D. PLACE REINFORCEMENT AT MID DEPTH OF FLANGE OR TOPPING.
   E. LARGER QUANTITY OF REINFORCEMENT SHALL BE ORIENTED IN TRANSVERSE DIRECTION.
   F. PROVIDE TOPPING WWF IN SHEETS NOT ROLLS.
   G. SUPPORT TOPPING IN WWF WITH CONTINUOUS BAR SUPPORTS SPACED AT 2'-0" OC MAX
4. FOR TEE/TEE JOINT DETAILS, SEE 8/S-521
5. FOR EMBED PLATES TO RECEIVE WELDS AS PART OF WELDED CONNECTIONS, SEE 7/S-524.

UNCW
UNIVERSITY of NORTH CAROLINA WILMINGTON
601 S COLLEGE ROAD
WILMINGTON, NORTH CAROLINA 28403

PARKING DECK II AND SURFACE PARKING (DESIGN-BUILD)
SOUTH CAMPUS - 4965 RIEGEL ROAD

SCO ID NUMBER: 18-19226-01A
CODE: 41828
ITEM: 301

CONTRACTOR
Balfour Beatty Construction

DESIGNER
CLARKNEXSEN
1523 ELIZABETH AVENUE, SUITE 300
CHARLOTTE, NORTH CAROLINA 28204
704.377.8800
CLARK NEXSEN LICENSE NUMBER: C-1028

WALKER CONSULTANTS
13860 Ballantyne Corporate Place
Suite 140
Charlotte, NC 28277
T: 704.247.6230
www.walkerconsultants.com
NC License No. F-0518

McKIM&CREED
CIVIL ENGINEER
243 NORTH FRONT STREET
WILMINGTON, NORTH CAROLINA
28401
910.343.1048

PROFESSIONAL SEAL

NOT FOR CONSTRUCTION
NORTH CAROLINA PROFESSIONAL SEAL 028007 ENGINEER JOEY D. ROWLAND

SUBMITTAL
04/15/2019
CONSTRUCTION DOCUMENT SUBMITTAL 01

REVISIONS

KEY PLAN

SHEET
P/C TEE DETAILS

S-521

DESIGN: Designer
DRAWN: Author
REVIEW: Checker

CN PROJECT NUMBER

4/15/2019 5:35:28 PM
C:\Revit Projects\UNC Wilmington Deck II_r17_roy.grantham.rvt

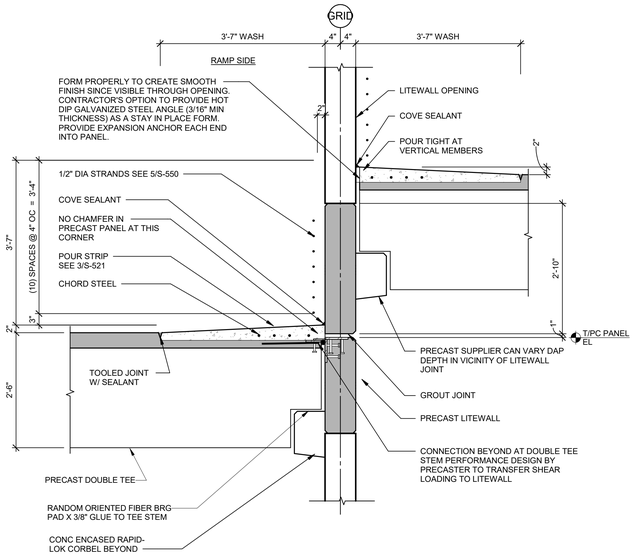

3 LIGHT WALL SECTION DETAIL

3/4" = 1'-0"

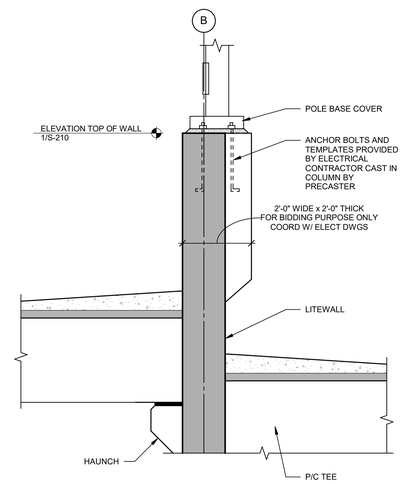

2 LITEWALL/POLE BASE CONNECTION DETAIL

3/4" = 1'-0"

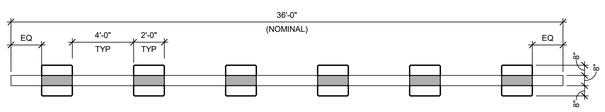

6 LITEWALL PLAN DETAIL

1/4" = 1'-0"

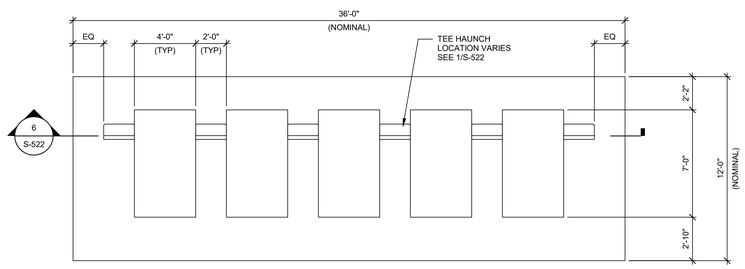

5 LITEWALL ELEVATION DETAIL

1/4" = 1'-0"

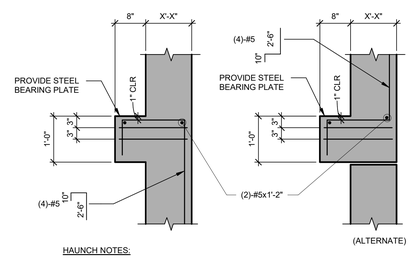

HAUNCH NOTES:

1. THE WIDTH OF HAUNCH IS 1'-6" UNLESS NOTED OTHERWISE.
2. LOCATE THE HAUNCH AND MODIFY THE TEE DAP AS REQUIRED TO AVOID THE HORIZONTAL JOINT LOCATION.

1 LITEWALL HAUNCH DETAIL

3/4" = 1'-0"

SHEET NOTES

PRECAST LITEWALL NOTES:

1. FOR GENERAL NOTES, SEE S-001.
2. LITEWALL DESIGN IS PERFORMANCE DESIGN AND SHALL INCLUDE SIZE, NUMBER AND LOCATION OF VERTICAL AND HORIZONTAL REINFORCING, INCLUDING TIES AND STIRRUPS. DESIGN SALL ALSO INCLUDE BASE CONNECTIONS, HAUNCH OR LEDGE REINFORCEMENT, AND SIZE, NUMBER, AND SPACING OF INSERTCOIL ROD (OR OTHER SHEAR TRANSFER) CONNECTIONS INTO POUR STRIPS FOR SHEAR TRANSFER OF LATERAL LOADS. SEE SPECIFICATION 03410 FOR PRECAST CONCRETE.
3. FOR LITEWALL SIZES, SEE DETAILS THIS SHEET.
4. FOR LITEWALL BASE CONNECTION, SEE 12/S-524.
5. FOR TOP OF LITEWALLS, SEE 1/S-210.
6. PROVIDE THICKENED SECTION AT TOP OF LITEWALL AS REQUIRED FOR LIGHT POLE SUPPORT. COORDINATE LOCATION AND REQUIREMENTS WITH ELECTRICAL DRAWINGS AND LIGHT POLE SUPPLIER.
7. FOR EMBEDED PLATES TO RECEIVE WELDS AS PART OF WELDED CONNECTIONS, SEE 7/S-524.
8. FOR LATERAL LOADS DUE TO SEISMIC, SEE 1/S-210.
9. PRECAST MANUFACTURER TO CONDUCT THIER OWN LATERAL ANAYLSIS FOR LITEWALL MEMBER AND CONNECTION DESIGN.

UNCW
UNIVERSITY of NORTH CAROLINA WILMINGTON
601 S COLLEGE ROAD
WILMINGTON, NORTH CAROLINA 28403

PARKING DECK II AND SURFACE PARKING (DESIGN-BUILD)
SOUTH CAMPUS - 4965 RIEGEL ROAD

SCO ID NUMBER: 18-19226-01A
CODE: 41828
ITEM: 301

CONTRACTOR
Balfour Beatty Construction

DESIGNER
CLARKNEXSEN
1523 ELIZABETH AVENUE, SUITE 300
CHARLOTTE, NORTH CAROLINA 28204
704 377 8800
CLARK NEXSEN LICENSE NUMBER: C-1028

WALKER CONSULTANTS
13860 Ballantyne Corporate Place
Suite 140
Charlotte, NC 28277
T: 704.247.6230
www.walkerconsultants.com
NC License No. F-0518

McKIM&CREED
CIVIL ENGINEER
243 NORTH FRONT STREET
WILMINGTON, NORTH CAROLINA
28401
910.343.1048

PROFESSIONAL SEAL

NOT FOR CONSTRUCTION
NORTH CAROLINA PROFESSIONAL SEAL 028007 ENGINEER JOEY D. ROWLAND

SUBMITTAL
04/15/2019
CONSTRUCTION DOCUMENT SUBMITTAL 01

REVISIONS

KEY PLAN

SHEET
P/C LITEWALL DETAILS

S-522

DESIGN: Designer
DRAWN: Author
REVIEW: Checker

CN PROJECT NUMBER

4/15/2019 5:35:29 PM
C:\Revit Projects\UNC Wilmington Deck II_r17_roy.grantham.rvt

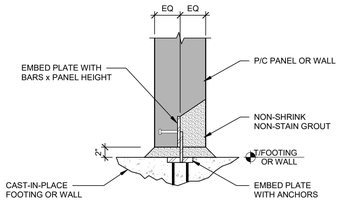

12 PRECAST WALL BASE DETAIL
NTS

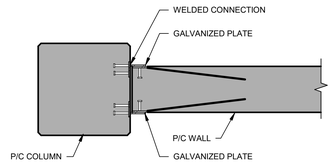

9 VERT COLUMN TO PANEL CONNECTION DETAIL
NTS

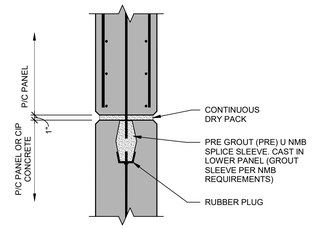

3 CONNECTION DETAIL
NTS

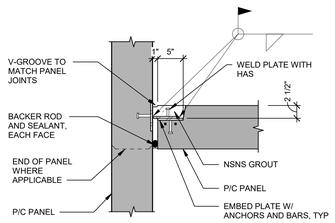

NOTES:
1. (2) CONNECTIONS MINIMUM PER PANEL
2. SEE PRECAST EMBEDMENT SCHEDULE FOR MATERIALS.

8 VERTICAL PANEL/PANEL CONNECTION
NTS

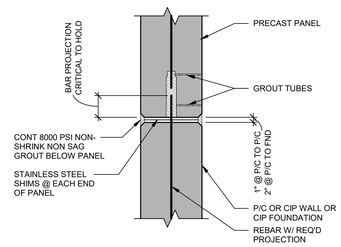

5 WALL TO WALL CONNECTION DETAIL
1" = 1'-0"

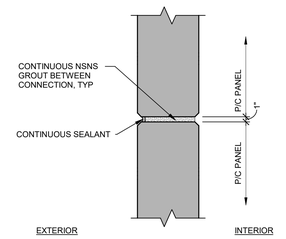

2 HORIZONTAL PANEL/PANEL DETAIL
NTS

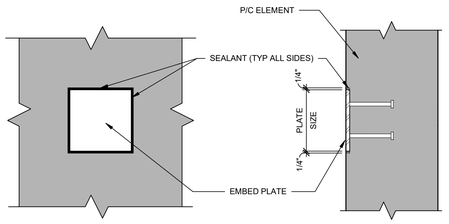

NOTE:
TAKE ALL FEASIBLE MEASURES TO CONTROL EXCESSIVE HEATING OF THE EMBEDDED PLATE(S) BY LIMITING WELD LENGTHS-SKIP WELDS WILL HELP. USE LAYERED SMALLER WELDS INSTEAD OF A SINGLE LARGE WELD.

7 EMBED PLATE DETAIL
NTS

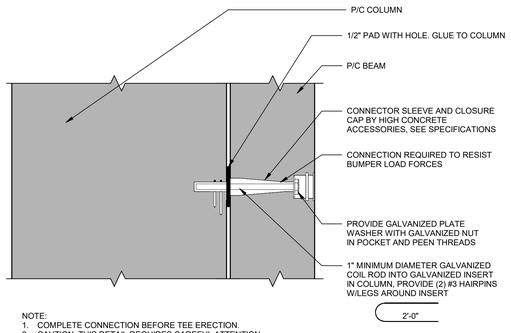

NOTE:
1. COMPLETE CONNECTION BEFORE TEE ERECTION.
2. CAUTION. THIS DETAIL REQUIRES CAREFUL ATTENTION TO ERECTION TOLERANCE. CONSIDER USING SLOTTED INSERT AS REQUIRED.

4 CONNECTION DETAIL
NTS

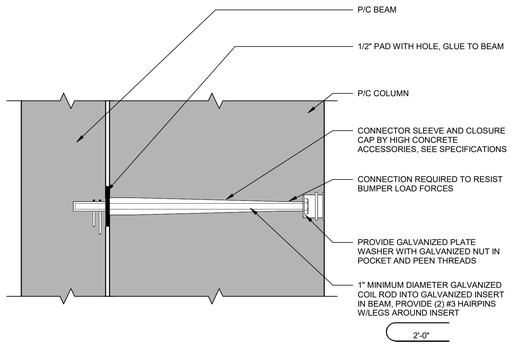

NOTE: COMPLETE CONNECTION BEFORE TEE ERECTION.

1 CONNECTION DETAIL
NTS

UNCW
UNIVERSITY of NORTH CAROLINA WILMINGTON
601 S COLLEGE ROAD
WILMINGTON, NORTH CAROLINA 28403

PARKING DECK II AND SURFACE PARKING (DESIGN-BUILD)
SOUTH CAMPUS - 4965 RIEGEL ROAD

SCO ID NUMBER: 18-19226-01A
CODE: 41828
ITEM: 301

CONTRACTOR
Balfour Beatty Construction

DESIGNER
CLARKNEXSEN
1523 ELIZABETH AVENUE, SUITE 300
CHARLOTTE, NORTH CAROLINA 28204
704.377.8800
CLARK NEXSEN LICENSE NUMBER: C-1028

WALKER CONSULTANTS
13860 Ballantyne Corporate Place
Suite 140
Charlotte, NC 28277
T: 704.247.6230
www.walkerconsultants.com
NC License No. F-0518

McKIM&CREED
CIVIL ENGINEER
243 NORTH FRONT STREET
WILMINGTON, NORTH CAROLINA
28401
910.343.1048

PROFESSIONAL SEAL
NORTH CAROLINA PROFESSIONAL SEAL 028007 ENGINEER JOEY D. ROWLAND
NOT FOR CONSTRUCTION

SUBMITTAL
04/15/2019
CONSTRUCTION DOCUMENT SUBMITTAL 01

REVISIONS

KEY PLAN

SHEET
TYPICAL P/C CONNECTION DETAILS

S-524

DESIGN: Designer
DRAWN: Author
REVIEW: Checker

CN PROJECT NUMBER

4/15/2019 5:35:30 PM
C:\Revit Projects\UNC Wilmington Deck II_r17_roy grantham.rvt

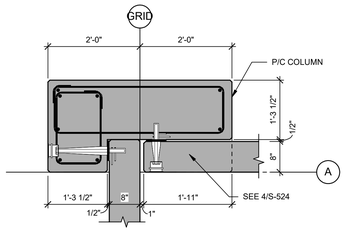

14 P/C CLOSURE SPANDREL PLAN DETAIL
3/4" = 1'-0"

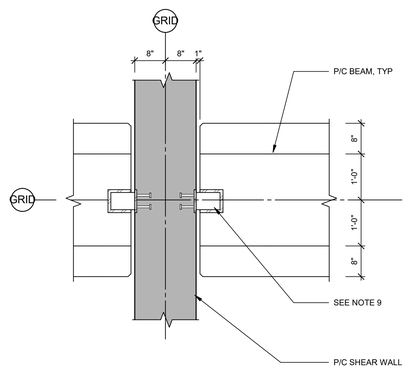

13 PRECAST WALL/BEAM PLAN DETAIL
3/4" = 1'-0"

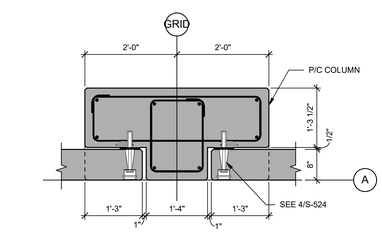

12 PLAN DETAIL
3/4" = 1'-0"

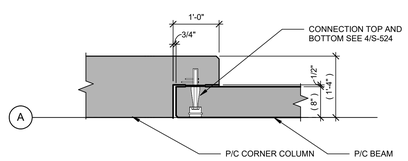

11 PRECAST COL/SPANDREL PLAN DETAIL
3/4" = 1'-0"

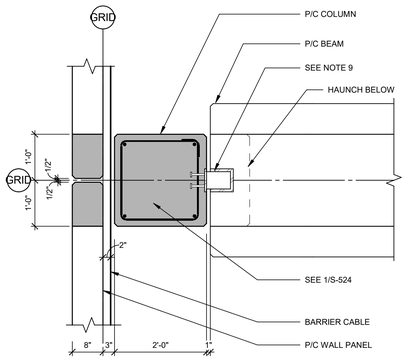

10 PRECAST COLUMN PLAN DETAIL
3/4" = 1'-0"

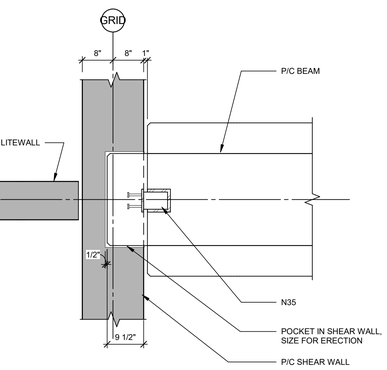

9 PRECAST WALL/BEAM PLAN DETAIL
3/4" = 1'-0"

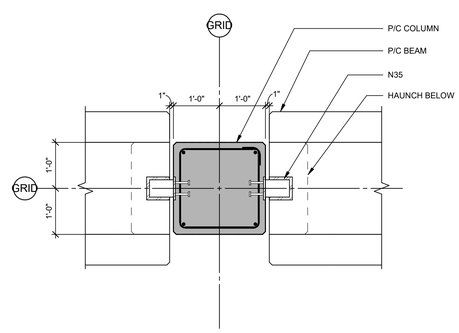

8 PRECAST COLUMN PLAN DETAIL
3/4" = 1'-0"

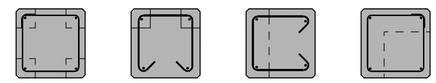

NOTE:
MAIN REINFORCING NOT SHOWN FOR CLARITY

7 DIAGRAM FOR ADDED TIES BETWEEN POCKETS
NTS

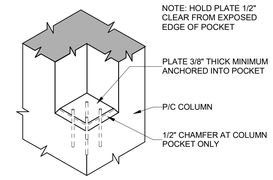

6 PRECAST COLUMN POCKET
NTS

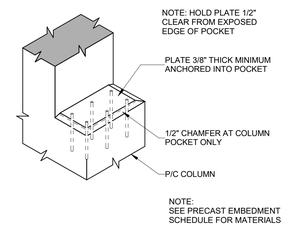

5 PRECAST COLUMN POCKET
NTS

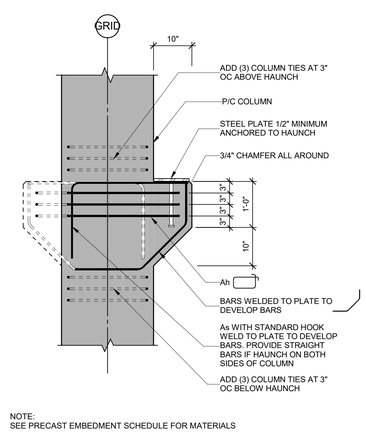

NOTE:
SEE PRECAST EMBEDMENT SCHEDULE FOR MATERIALS

4 PRECAST HAUNCH DETAIL
NTS

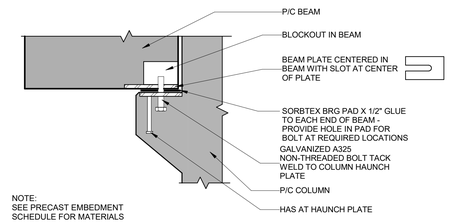

NOTE:
SEE PRECAST EMBEDMENT
SCHEDULE FOR MATERIALS

3 PRECAST CONNECTION DETAIL
NTS

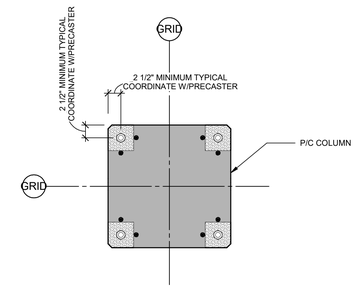

2 PRECAST COLUMN PLAN DETAIL
NTS

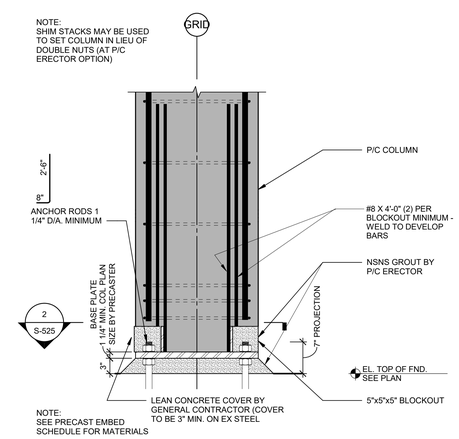

1 PRECAST COLUMN BASE DETAIL
NTS

SHEET NOTES

PRECAST COLUMN NOTES:

1. FOR GENERAL NOTES, SEE SHEET S-001.
2. COLUMN DESIGN IS PERFORMANCE DESIGN AND SHALL INCLUDE TYPE, NUMBER AND LOCATION OF VERTICAL REINFORCEMENT AND TIES. DESIGN SHALL ALSO INCLUDE BASE, POCKET, AND HAUNCH REINFORCEMENT. SEE SPECIFICATION SECTION 034100 FOR PRECAST CONCRETE.
3. PERFORMANCE DESIGN SHALL INCLUDE EFFECTS DUE TO VOLUME CHANGE OF THE STRUCTURE. COLUMNS SHALL BE DESIGNED ASSUMING PINNED BASE CONDITIONS.
4. FOR COLUMN SIZES, SEE PLANS AND DETAILS ON SHEET S-525.
5. FOR COLUMN BASE, POCKET, AND HAUNCH DETAILS, SEE DETAILS ON SHEET S-525.
6. PROVIDE #5 MIN VERTICAL AT EACH CORNER BETWEEN POCKETS TYP.
7. MINIMUM COLUMN TIES SHALL BE #4 GRADE 60 CLOSED TIES AS FOLLOWS:
   a. AT 16" OC (MAX SPACING) TYP AND FOR ADDED TIES AT REINFORCEMENT BELOW AND BETWEEN POCKETS.
   b. ADD (4) TIES @ 3" OC BELOW EACH POCKET
   c. ADD (2) TIES @ 3" OC ABOVE EACH POCKET
   d. ADD (4) TIES @ 3" OC @ TOP & BOTTOM OF COLUMN
   e. ADD (3) TIES @ 3" OC ABOVE & BELOW HAUNCHES
   f. ADD (1) TIE ABOVE & BELOW COIL ROD INSERTS.
8. FOR EMBED PLATES TO RECEIVE WELDS AS PART OF WELDED CONNECTIONS, SEE 7/S-524.
9. TORSION STABILITY CONNECTIONS TOP & BOTTOM EACH END OF BEAM BY PRECASTER. SEE DETAILS 8/S-520 & 3/S-525 FOR EXAMPLES.

UNCW
UNIVERSITY of NORTH CAROLINA WILMINGTON
601 S COLLEGE ROAD
WILMINGTON, NORTH CAROLINA 28403

PARKING DECK II AND SURFACE PARKING (DESIGN-BUILD)
SOUTH CAMPUS - 4965 RIEGEL ROAD

SCO ID NUMBER: 18-19226-01A
CODE: 41828
ITEM: 301

CONTRACTOR
Balfour Beatty Construction

DESIGNER
CLARKNEXSEN
1523 ELIZABETH AVENUE, SUITE 300
CHARLOTTE, NORTH CAROLINA 28204
704.377.8800
CLARK NEXSEN LICENSE NUMBER: C-1028

WALKER CONSULTANTS
13860 Ballantyne Corporate Place
Suite 140
Charlotte, NC 28277
T: 704.247.6230
www.walkerconsultants.com
NC License No. F-0518

McKIM&CREED
CIVIL ENGINEER
243 NORTH FRONT STREET
WILMINGTON, NORTH CAROLINA
28401
910.343.1048

PROFESSIONAL SEAL

NOT FOR CONSTRUCTION
NORTH CAROLINA PROFESSIONAL SEAL 028007 ENGINEER JOEY D. ROWLAND

SUBMITTAL
04/15/2019
CONSTRUCTION DOCUMENT SUBMITTAL 01

REVISIONS

KEY PLAN

SHEET
P/C COLUMN DETAILS

S-525

DESIGN: Designer
DRAWN: Author
REVIEW: Checker

CN PROJECT NUMBER

4/15/2019 5:35:34 PM
C:\Revit Projects\UNC Wilmington Deck II_r17_ory grantham.rvt

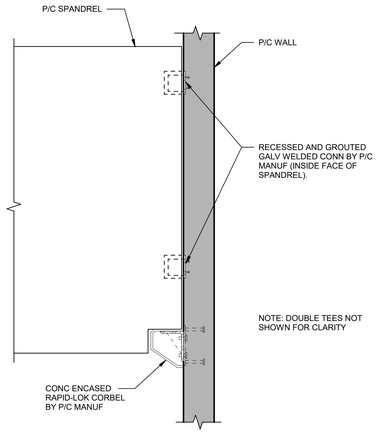

8 SPANDREL/WALL DETAIL
3/4" = 1'-0"

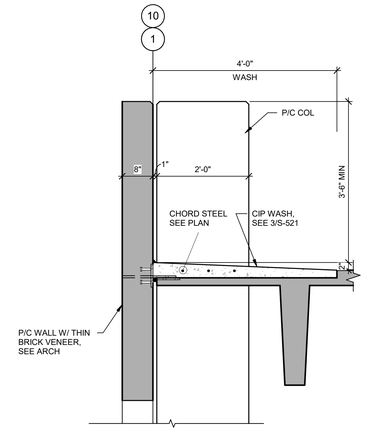

5 SECTION
3/4" = 1'-0"

KEY NOTES

N12. SLOPE BEARING PLATES IN BEAMS AND SUPPORT PLATES IN COLUMNS, AS REQ'D, TO PROVIDE UNIFORM BEARING ON PADS (TYPICAL).
N20. #5 (MIN) X 7'-0" @ EACH TEE STEM.
N21. #4 L-BAR W/ 2'-0" LEGS, SPACE TO MATCH COIL ROD SPACING.
N22. #4 X 3'-0" W/ 180° STD HOOK @ 4'-0" OC AND 1-#4 X CONTINUOUS.
N23. CHORD STEEL. SEE PLAN.
N27. 6" X 6" W2.9 X W2.9 ADDED WWF.
N28. #5 (MIN) X 4'-6" @ EACH TEE STEM.
N30. WELDED COLUMN BRACING CONNECTION BY PRECASTER.
N31. 3/4" DIA INSERT AND COIL ROD X 2'-6" (6" FROM EDGE OF EACH POCKET) W/ #4 HAIRPIN W/ 2'-0" LEGS AROUND INSERT AND 1-#4 CONTINUOUS.
N32. 3/4" DIA INSERT/COIL ROD (GALV) X 2'-6" @ 4' OC W/ 2-#4 CONTINUOUS ADJUST INSERT ELEV FOR TEE CAMBER.
N33. 3/4" DIA INSERT/COIL ROD (GALV) X 2'-6" @ EACH TEE STEM W/ 2-#4 CONTINUOUS.
N34. ERECTION CONNECTION BY PRECASTER.
N35. TORSIONSTABILITY CONNECTIONS TOP & BOT EA EACH END OF BEAM BY PRECASTER. SEE DETAILS ON SHEET S-525 FOR EXAMPLES.
N36. CONNECTION REQUIRED TO RESIST BUMPER LOAD FORCES.
N40. COVE SEALANT. SEE DETAIL 1/S-570.
N42. CONTINUOUS ETHAFOAM CONC DAM AS REQ'D.
N43. TOOLED JOINT W/ SEALANT.
N50. SORBTEX BRG PAD X 1/2", GLUE TO BEAM.
N51. RANDOM ORIENTED FIBER REINFORCED BRG. PAD X 3/8", GLUE TO TEE STEM.
N52. SORBTEX BRG PAD X 1/2", GLUE TO BEAM, AT EACH END OF BEAM. PROVIDE HOLE IN PAD FOR BOLT AT REQUIRED LOCATIONS.
N53. SORBTEX BRG PAD X 1/2", GLUE TO COLUMN POCKET.
N60. TOP OF COLUMN AT TOP TIER.
N63. USE FORM WHERE BOTTOM OF TEE FLANGE RISES ABOVE TOP OF BEAM.

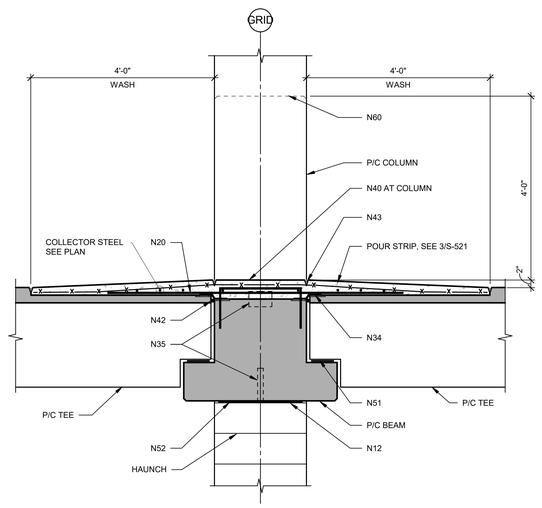

7 SECTION
3/4" = 1'-0"

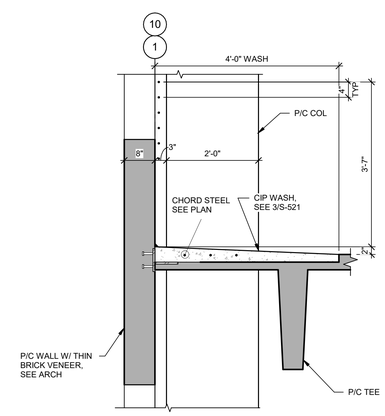

4 SECTION
3/4" = 1'-0"

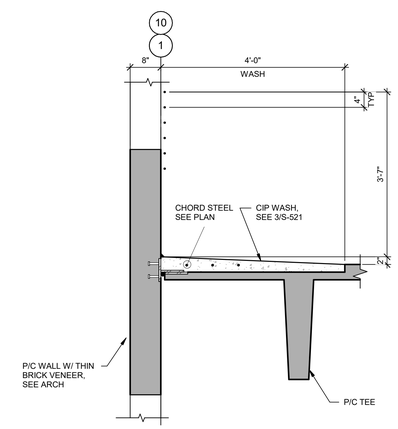

2 SECTION
3/4" = 1'-0"

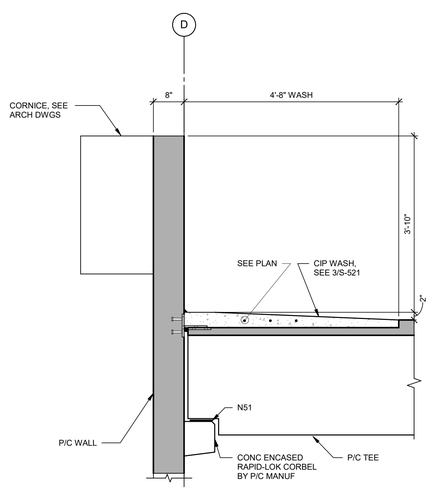

9 SECTION
3/4" = 1'-0"

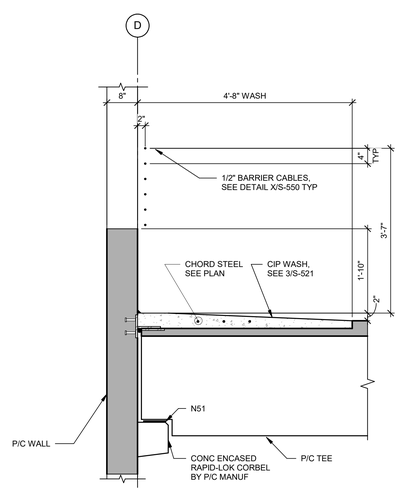

6 SECTION
3/4" = 1'-0"

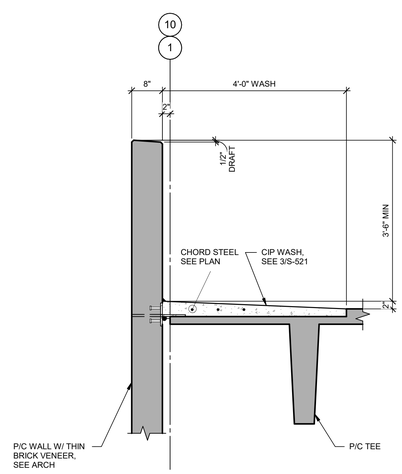

3 SECTION
3/4" = 1'-0"

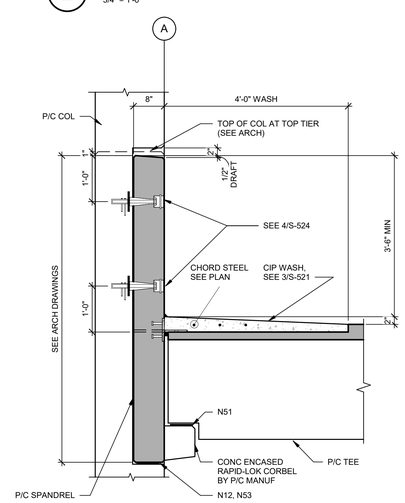

1 SECTION
3/4" = 1'-0"

UNCW
UNIVERSITY of NORTH CAROLINA WILMINGTON
601 S COLLEGE ROAD
WILMINGTON, NORTH CAROLINA 28403

PARKING DECK II AND SURFACE PARKING (DESIGN-BUILD)
SOUTH CAMPUS - 4965 RIEGEL ROAD

SCO ID NUMBER: 18-19226-01A
CODE: 41828
ITEM: 301

CONTRACTOR
Balfour Beatty Construction

DESIGNER
CLARKNEXSEN
1523 ELIZABETH AVENUE, SUITE 300
CHARLOTTE, NORTH CAROLINA 28204
704 377 8800

CLARK NEXSEN LICENSE NUMBER: C-1028

WALKER CONSULTANTS
13860 Ballantyne Corporate Place
Suite 140
Charlotte, NC 28277
T: 704.247.6230
www.walkerconsultants.com
NC License No. F-0518

McKIM&CREED
CIVIL ENGINEER
243 NORTH FRONT STREET
WILMINGTON, NORTH CAROLINA
28401
910.343.1048

PROFESSIONAL SEAL
NOT FOR CONSTRUCTION
NORTH CAROLINA PROFESSIONAL SEAL 028007 ENGINEER JOEY D. ROWLAND

SUBMITTAL
04/15/2019
CONSTRUCTION DOCUMENT SUBMITTAL 01

REVISIONS

KEY PLAN

SHEET
STRUCTURAL DETAILS

S-540

DESIGN: Designer
DRAWN: Author
REVIEW: Checker

CN PROJECT NUMBER

4/15/2019 5:35:33 PM
C:\Revit Projects\UNC-Wilmington Deck II_v17_roy.grantham.rvt

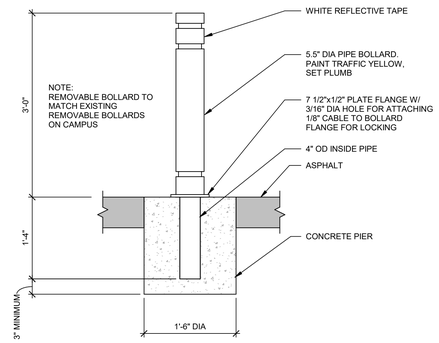

9 REMOVABLE PIPE BOLLARD DETAIL
1" = 1'-0"

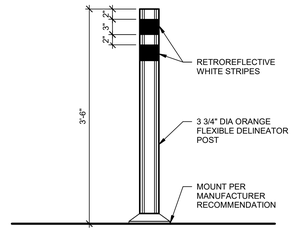

6 DELINEATOR POST
1" = 1'-0"

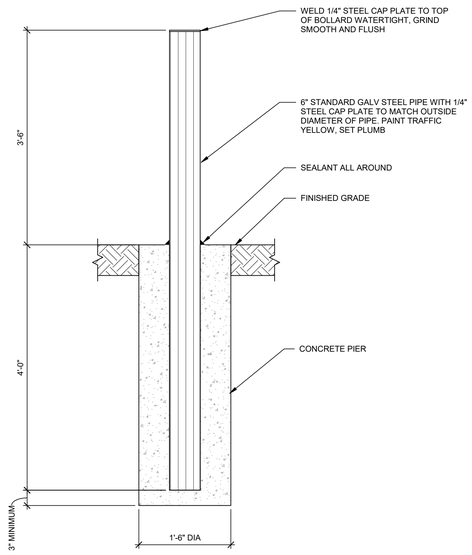

11 PIPE BOLLARD DETAIL
1" = 1'-0"

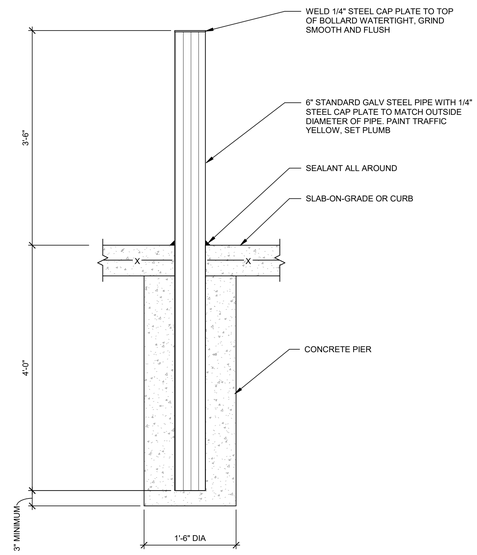

8 PIPE BOLLARD DETAIL
1" = 1'-0"

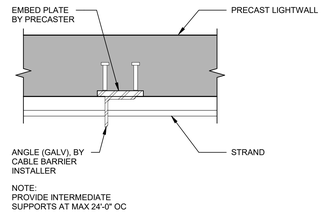

5 STRAND INTERMEDIATE SUPPORT DETAIL
1 1/2" = 1'-0"

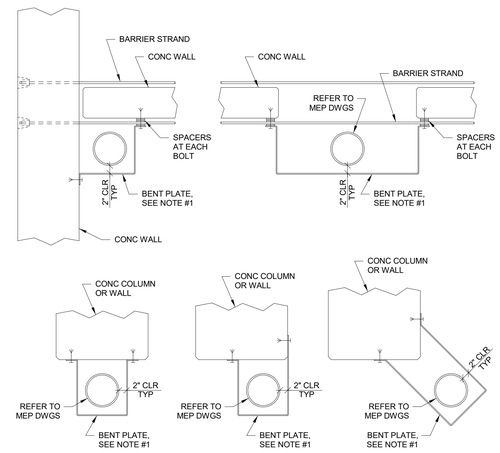

NOTE:
1. BENT PLATE 1/4" x 1'-0" HIGH w/ (4) 1/2" □ EXP. ANCHORS, MOUNT BOTTOM EDGE OF GUARD AT 1'-2" ABOVE FLOOR LEVEL OR 2" ABOVE CLEANOUT.

3 PIPE GUARD DETAILS
3/4" = 1'-0"

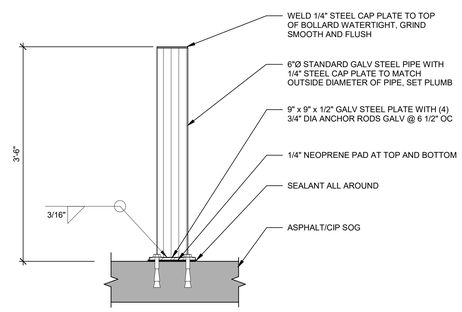

NOTE:
1. PAINT ENTIRE PIPE GUARD ASSEMBLY ABOVE FLOOR TRAFFIC YELLOW

2 PIPE BOLLARD DETAIL
1" = 1'-0"

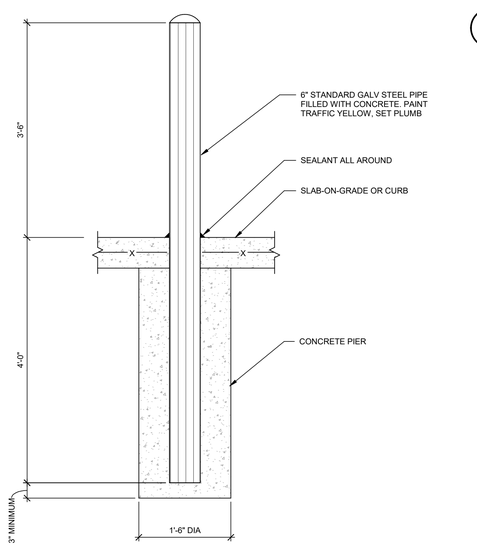

10 PIPE BOLLARD DETAIL
1" = 1'-0"

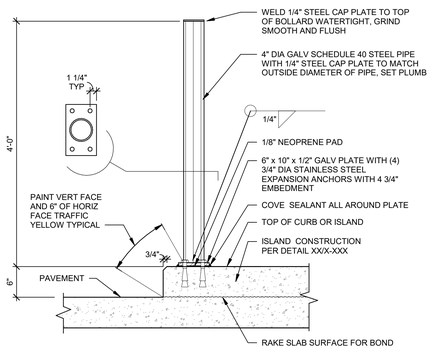

NOTE:
1. PAINT ENTIRE PIPE GUARD ASSEMBLY ABOVE FLOOR TRAFFIC YELLOW.
2. PARCS VENDOR AND GENERAL CONTRACTOR TO COORDINATE FINAL LOCATION OF PIPE BOLLARD WITH EQUIPMENT ACCESS REQUIREMENTS.
3. IF SLIP FORM CURB PROPOSED, CONTACT WALKER PROJECT MANAGER FOR ALTERNATE DETAIL.

7 PACS - PIPE BOLLARD
1" = 1'-0"

NOTE:
BARRIER CABLE SYSTEM IS A DELEGATED DESIGN. BARRIER CABLE SUBCONTRACTOR SHALL COORDINATE REQUIRED EMBEDS WITH PRECAST MANUFACTURER.

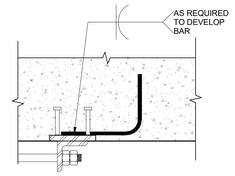

PLAN VIEW A-A

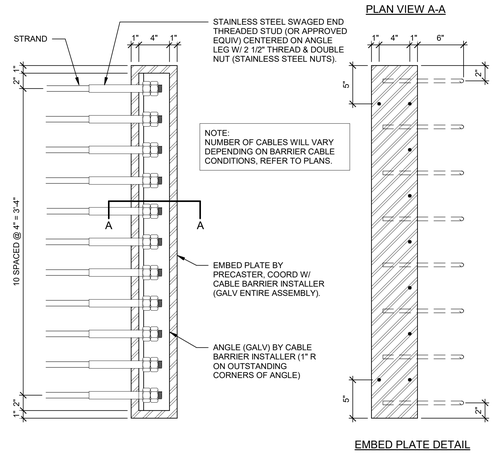

EMBED PLATE DETAIL

4 STRAND END ANCHOR
1 1/2" = 1'-0"

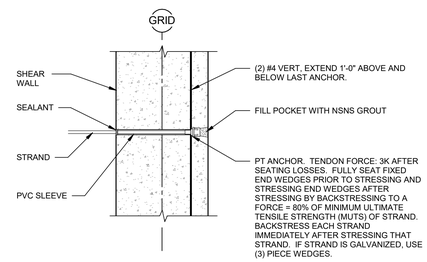

1 STRAND END ANCHOR DETAIL
3/4" = 1'-0"

SHEET NOTES

UNCW
UNIVERSITY of NORTH CAROLINA WILMINGTON
601 S COLLEGE ROAD
WILMINGTON, NORTH CAROLINA 28403

PARKING DECK II AND SURFACE PARKING (DESIGN-BUILD)
SOUTH CAMPUS - 4965 RIEGEL ROAD

SCO ID NUMBER: 18-19226-01A
CODE: 41828
ITEM: 301

CONTRACTOR
Balfour Beatty Construction

DESIGNER
CLARKNEXSEN
1523 ELIZABETH AVENUE, SUITE 300
CHARLOTTE, NORTH CAROLINA 28204
704 377 8800
CLARK NEXSEN LICENSE NUMBER: C-1028

WALKER CONSULTANTS
13860 Ballantyne Corporate Place
Suite 140
Charlotte, NC 28277
T: 704.247.6230
www.walkerconsultants.com
NC License No. F-0518

McKIM&CREED
CIVIL ENGINEER
243 NORTH FRONT STREET
WILMINGTON, NORTH CAROLINA
28401
910.343.1048

PROFESSIONAL SEAL
NOT FOR CONSTRUCTION
NORTH CAROLINA PROFESSIONAL SEAL 028007 ENGINEER JOSEY D. ROWLAND

SUBMITTAL
04/15/2019
CONSTRUCTION DOCUMENT SUBMITTAL 01

REVISIONS

KEY PLAN

SHEET
MISC METALS DETAILS

S-550

DESIGN: Designer
DRAWN: Author
REVIEW: Checker

CN PROJECT NUMBER

4/15/2019 5:33:38 PM
C:\Revit Projects\UNC Wilmington Deck II_r17_csy.grantham.rvt

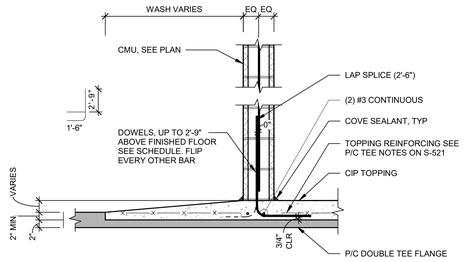

11 MASONRY DETAIL

3/4" = 1'-0"

CMU WALL SCHEDULE #					
WALL MARK	SIZE	VERT. REINF.	HORIZ. REINF.	DOWELS	NOTES
1	8"	#5 @ 4'-0"	9GA. TRUSS TYPE @ 16" O.C.	AT ALL VERTICAL REINFORCING	WHERE WALL SEGMENT IS 2'-8" OR LESS PROVIDE VERTICAL BAR AT EACH CORNER OR END AND ONE IN THE MIDDLE (3 BARS)
2	8"	#5 @ 8" TO 2'-8"AFF., #5 @ 4'-0" TO TOP (PROVIDE LAP SPLICE)	9GA. TRUSS TYPE @ 16" O.C.	AT ALL VERTICAL REINFORCING	WHERE WALL SEGMENT IS 4'-0" OR LESS PROVIDE VERTICAL BAR AT EACH CORNER OR END AND ONE IN THE MIDDLE (3 BARS)

10 MASONRY REBAR SCHEDULE

1" = 1'-0"

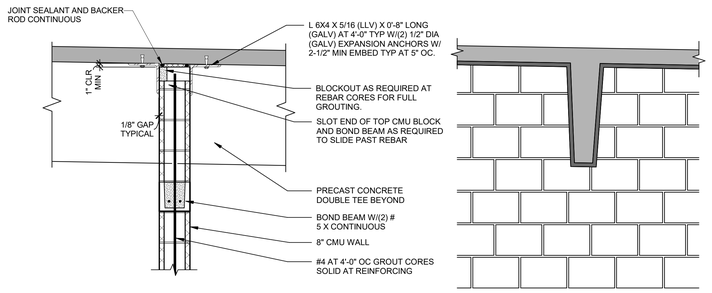

9 MASONRY WALL DETAIL

3/4" = 1'-0"

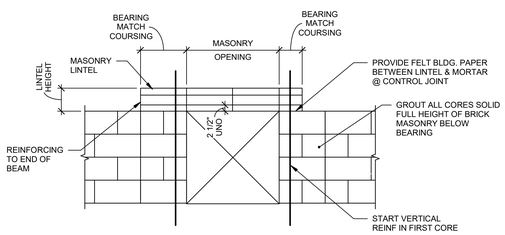

LINTEL SCHEDULE						
MARK	BLOCK WIDTH	MAX MASONRY OPENING	LINTEL BLOCK HEIGHT	REINFORCING	BEARING	REMARKS
L1	8"	4'-0"	8"	(2)-#5	8" MIN	SEE 3/S-560
L2	8"	12'-0"	2'-0"	(2)-#6 T&B	12" MIN	SEE 2/S-560

8 MASONRY LINTEL SCHEDULE

3/4" = 1'-0"

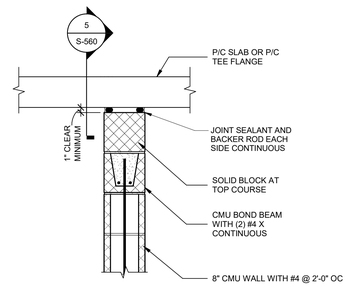

7 SLAB/WALL DETAIL

1" = 1'-0"

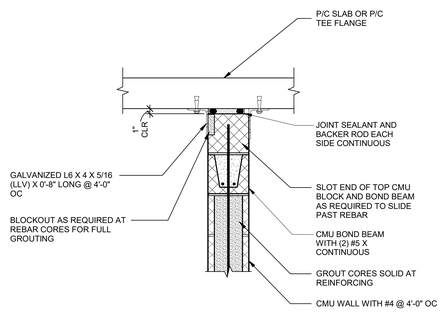

6 SLAB/WALL DETAIL

1" = 1'-0"

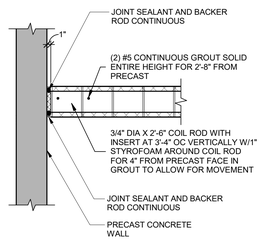

5 MASONRY DETAIL

3/4" = 1'-0"

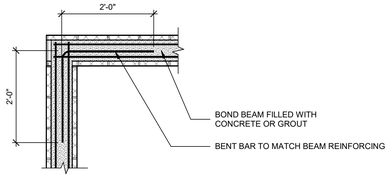

NOTES:
1. BOND BEAMS AT TOP OF WALL SHALL BE CONTINUOUS THROUGH MASONRY CONTROL JOINTS. INTERMEDIATE BOND BEAMS SHALL BE DISCONTINUOUS AT MASONRY CONTROL JOINTS.
2. MINIMUM BOND BEAM REINFORCING SHALL BE 2-#5 IN ALL BOND BEAMS.

4 CORNER REINFORCEMENT

3/4" = 1'-0"

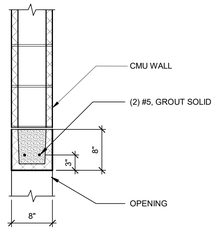

3 MASONRY LINTEL DETAIL

1" = 1'-0"

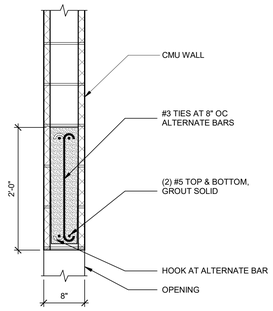

NOTE:
ENGINEER MUST VERIFY LOADS AND SPANS FOR THIS DETAIL

2 MASONRY LINTEL DETAIL

1" = 1'-0"

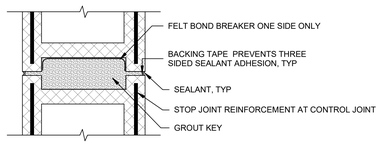

NOTES:
1. CONTROL JOINTS ARE REQUIRED IN MASONRY WALL AT 20'-0" MAX.
2. LOCATE NEAR CENTER OF WALL.

1 MASONRY CONTROL JOINT DETAIL

3" = 1'-0"

UNCW
UNIVERSITY of NORTH CAROLINA WILMINGTON
601 S COLLEGE ROAD
WILMINGTON, NORTH CAROLINA 28403

PARKING DECK II AND SURFACE PARKING (DESIGN-BUILD)
SOUTH CAMPUS - 4965 RIEGEL ROAD

SCO ID NUMBER: 18-19226-01A
CODE: 41828
ITEM: 301

CONTRACTOR
Balfour Beatty Construction

DESIGNER
CLARKNEXSEN
1523 ELIZABETH AVENUE, SUITE 300
CHARLOTTE, NORTH CAROLINA 28204
704.377.8800

CLARK NEXSEN LICENSE NUMBER: C-1028

WALKER CONSULTANTS
13860 Ballantyne Corporate Place
Suite 140
Charlotte, NC 28277
T: 704.247.6230
www.walkerconsultants.com
NC License No. F-0518

McKIM&CREED
CIVIL ENGINEER
243 NORTH FRONT STREET
WILMINGTON, NORTH CAROLINA
28401
910.343.1048

PROFESSIONAL SEAL
NOT FOR CONSTRUCTION
NORTH CAROLINA PROFESSIONAL SEAL 028007 ENGINEER JOEY D. ROWLAND

SUBMITTAL
04/15/2019
CONSTRUCTION DOCUMENT SUBMITTAL 01

REVISIONS

KEY PLAN

SHEET
MASONRY DETAILS

S-560

DESIGN: Designer
DRAWN: Author
REVIEW: Checker

CN PROJECT NUMBER

4/15/2019 5:35:40 PM
C:\Revit Projects\UNC Wilmington Deck II_r17_crsy.grantham.rvt

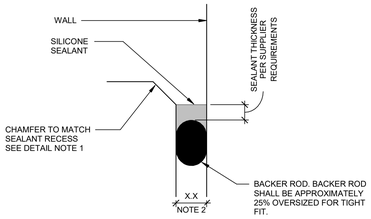

NOTE:
1. WHEN JOINT WIDTH IS 0"-1", RECESS SEALANT 1/4". JOINTS 1"-3". RECESS SEALANT 3/8"

9 FIELD APPLIED SILICONE SEALANT EXPANSION JOINT DETAIL

12" = 1'-0"

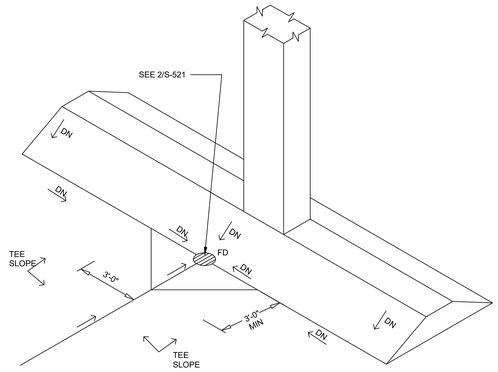

6 CIP WASH SLOPE DETAIL

1/4" = 1'-0"

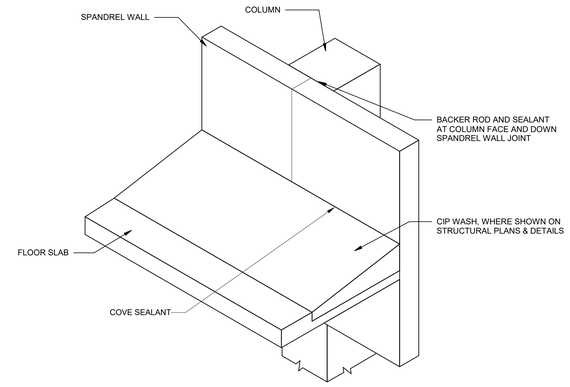

NOTES:
1. TOOLED JOINT AND SEALANT IN CIP WASH AT ALL P/C JOINTS BELOW TYP.
2. DETAIL SIMILAR AT SHEAR WALLS AND WALL PANELS.

3 INSIDE FACE OF WALL/CURB/COLUMN SEALANT TOP TIER ONLY

3/4" = 1'-0"

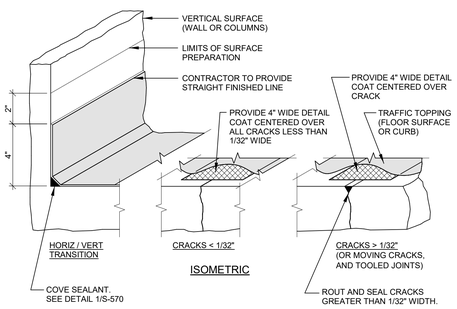

8 TRAFFIC TOPPING DETAIL

3" = 1'-0"

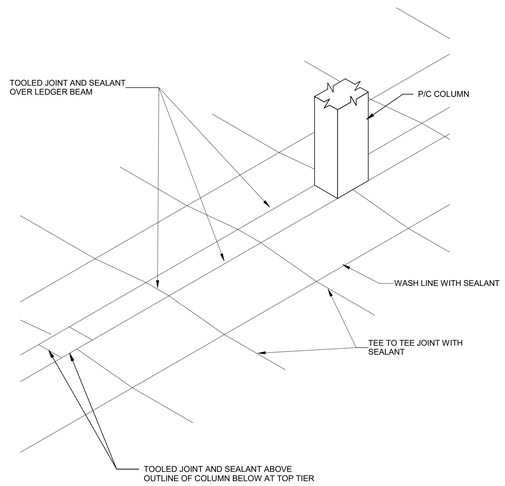

5 SEALANT ISOMETRIC

1/4" = 1'-0"

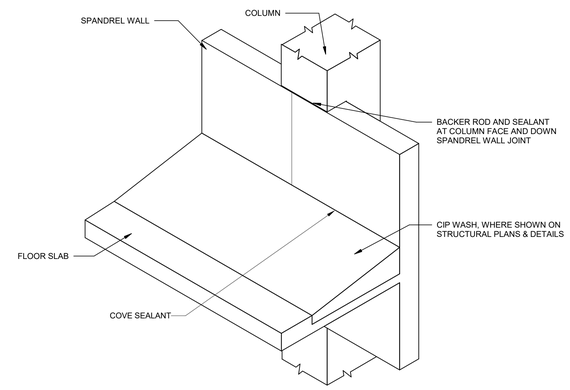

NOTES:
1. TOOLED JOINT AND SEALANT IN CIP WASH AT ALL P/C JOINTS BELOW TYP.
2. DETAIL SIMILAR AT SHEAR WALLS AND WALL PANELS.

2 INSIDE FACE OF WALL/CURB/COLUMN SEALANT

3/4" = 1'-0"

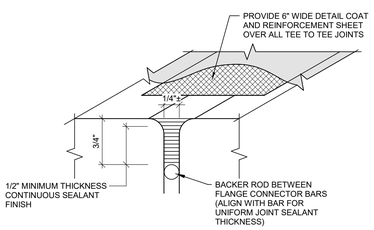

7 TRAFFIC TOPPING AT JOINT SEALANT DETAIL

12" = 1'-0"

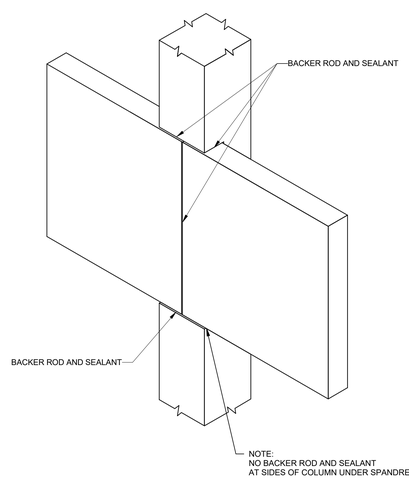

4 EXTERIOR FACADE SEALANT

3/4" = 1'-0"

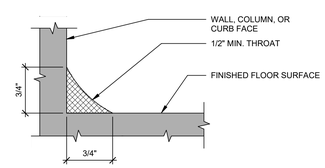

NOTES:
1. PREPARE & ALLOW FOR PRIMER TO CURE PROPERLY PRIOR TO INSTALLING SEALANT.
2. SEE SPECIFICATIONS FOR APPROVED MATERIALS.
3. DETAIL NOT TO SCALE.

1 COVE SEALANT

UNIVERSITY of NORTH CAROLINA WILMINGTON
601 S COLLEGE ROAD
WILMINGTON, NORTH CAROLINA 28403

PARKING DECK II AND SURFACE PARKING (DESIGN-BUILD)
SOUTH CAMPUS - 4965 RIEGEL ROAD

SCO ID NUMBER: 18-19226-01A
CODE: 41828
ITEM: 301

CONTRACTOR
Balfour Beatty Construction

DESIGNER
CLARKNEXSEN
1523 ELIZABETH AVENUE, SUITE 300
CHARLOTTE, NORTH CAROLINA 28204
704 377 8800
CLARK NEXSEN LICENSE NUMBER: C-1028

WALKER CONSULTANTS
13860 Ballantyne Corporate Place
Suite 140
Charlotte, NC 28277
T: 704.247.6230
www.walkerconsultants.com
NC License No. F-0518

McKIM&CREED
CIVIL ENGINEER
243 NORTH FRONT STREET
WILMINGTON, NORTH CAROLINA
28401
910.343.1048

PROFESSIONAL SEAL
NOT FOR CONSTRUCTION
NORTH CAROLINA PROFESSIONAL SEAL 028007 ENGINEER JOEY D. ROWLAND

SUBMITTAL
04/15/2019
CONSTRUCTION DOCUMENT SUBMITTAL 01

REVISIONS

KEY PLAN

SHEET
WATERPROOFING & EXPANSION JOINT DETAILS

S-570

DESIGN: Designer
DRAWN: Author
REVIEW: Checker

CN PROJECT NUMBER

4/15/2019 5:55:41 PM
C:\Revit Projects\UNC Wilmington Deck II_r17_roy.grantham.rvt

SHEET NOTES

EXPANSION JOINT NOTES:

1. EXPANSION JOINTS ARE PERFORMANCE DESIGN. EXPANSION JOINT SYSTEM SHALL BE DETERMINED BY EXPANSION JOINT SUPPLIER AS REQUIRED TO MEET MOVEMENT AND OTHER CRITERIA DEFINED ON DRAWINGS AND IN SPECIFICATIONS.
2. FORM WIDTH SHOWN IN DETAILS IS A NOMINAL FORM WIDTH. INITIAL FORM WIDTH AT TIME OF CONCRETE PLACEMENT IS ADJUSTABLE AND IS PART OF PERFORMANCE DESIGN. INITIAL FORM WIDTH SHALL BE DETERMINED BY EXPANSION JOINT SUPPLIER AND COORDINATED WITH GENERAL CONTRACTOR. WIDTH DETERMINATION SHALL TAKE INTO CONSIDERATION TEMPERATURE PREVAILING AT TIME OF CONCRETE PLACEMENT, VOLUME CHANGE MOVEMENT THAT OCCURS BETWEEN TIME OF CONCRETE PLACEMENT AND TIME OF JOINT INSTALLATION, REQUIRED INSTALLATION WIDTH, FINAL MAXIMUM AND MINIMUM OPENING WIDTH, SEISMIC MOVEMENT, ETC. REFER TO EXPANSION JOINT MOVEMENT TABLE.
3. EXPANSION JOINT SYSTEM SHALL BE CAPABLE OF HANDLING DIFFERENTIAL VERTICAL MOVEMENT OF 1/2" INCH.
4. ONCE FORMED, JOINTS AND BLOCKOUTS SHALL BE PROTECTED FROM DAMAGE DUE TO CONSTRUCTION TRAFFIC.
5. IN SERVICE GAP WIDTH MUST ACCOMMODATE SEISMIC MOVEMENT WITHOUT ALLOWING CONCRETE EDGES OR ANY ELEMENTS OF EXPANSION JOINT ASSEMBLY TO "POUND" TOGETHER.
6. TOP PLATES MUST BE SIZED AND DESIGNED TO REMAIN IN SERVICE DURING AND AFTER DESIGN SEISMIC EVENT.

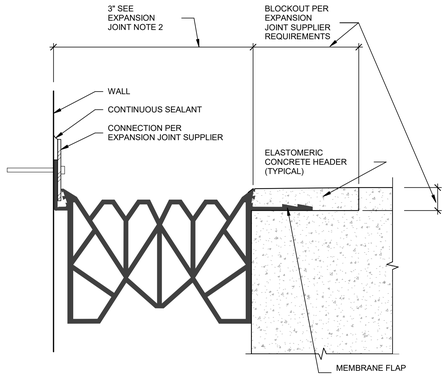

2 ELASTOMERIC CONC EDGED, EXTRUDED RUBBER EJ DETAIL
6" = 1'-0"

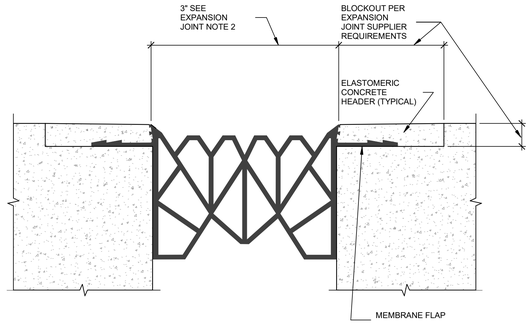

1 ELASTOMERIC CONC EDGED, EXTRUDED RUBBER EJ DETAIL
6" = 1'-0"

UNIVERSITY of NORTH CAROLINA WILMINGTON
601 S COLLEGE ROAD
WILMINGTON, NORTH CAROLINA 28403

PARKING DECK II AND SURFACE PARKING (DESIGN-BUILD)
SOUTH CAMPUS - 4965 RIEGEL ROAD

SCO ID NUMBER: 18-19226-01A
CODE: 41828
ITEM: 301

CONTRACTOR
Balfour Beatty Construction

DESIGNER

CLARKNEXSEN
1523 ELIZABETH AVENUE, SUITE 300
CHARLOTTE, NORTH CAROLINA 28204
704.377.8800

CLARK NEXSEN LICENSE NUMBER: C-1028

WALKER CONSULTANTS
13860 Ballantyne Corporate Place
Suite 140
Charlotte, NC 28277
T: 704.247.6230
www.walkerconsultants.com
NC License No. F-0518

McKIM&CREED
CIVIL ENGINEER
243 NORTH FRONT STREET
WILMINGTON, NORTH CAROLINA
28401
910.343.1048

PROFESSIONAL SEAL
NOT FOR CONSTRUCTION
NORTH CAROLINA PROFESSIONAL SEAL 028007 ENGINEER JOEY D. ROWLAND

SUBMITTAL
04/15/2019
CONSTRUCTION DOCUMENT SUBMITTAL 01

REVISIONS

KEY PLAN

SHEET
WATERPROOFING & EXPANSION JOINT DETAILS

S-571

DESIGN: Designer
DRAWN: Author
REVIEW: Checker

CN PROJECT NUMBER

4/15/2019 5:35:42 PM
C:\Revit Projects\UNC Wilmington Deck II_r17_ry.grantham.rvt

UNCOATED		TABLE 1 - TENSION DEVELOPMENT AND LAP SPLICE LENGTHS FOR UNCOATED BARS WITH CENTER TO CENTER SPACING NOT LESS THAN 5*d_b AND CLEAR COVER AT LEAST 2*d_b															
SEE GENERAL SHEET NOTES FOR FURTHER INFORMATION		LENGTHS (IN) PER CONCRETE STRENGTH														MIN CLEAR COVER (IN)	MIN CENTER TO CENTER SPACING (IN)
		f'_c = 4000 PSI		f'_c = 5000 PSI		f'_c = 6000 PSI		f'_c = 7000 PSI		f'_c = 8000 PSI		f'_c = 9000 PSI		f'_c = 10000 PSI OR GREATER			
BAR SIZE	LAP CLASS	12"CASTING POSITION	OTHER BARS	12"CASTING POSITION	OTHER BARS	12"CASTING POSITION	OTHER BARS	12"CASTING POSITION	OTHER BARS	12"CASTING POSITION	OTHER BARS	12"CASTING POSITION	OTHER BARS	12"CASTING POSITION	OTHER BARS		
#3	A	12	12	12	12	12	12	12	12	12	12	12	12	12	12	3/4	1 7/8
(#10)	B	16	16	16	16	16	16	16	16	16	16	16	16	16	16		
#4	A	15	12	14	12	12	12	12	12	12	12	12	12	12	12	1	2 1/2
(#13)	B	20	16	18	16	16	16	16	16	16	16	16	16	16	16		
#5	A	19	15	17	13	15	12	14	12	13	12	13	12	12	12	1 1/4	3 1/8
(#16)	B	24	19	22	17	20	16	18	16	17	16	16	16	16	16		
#6	A	22	17	20	16	18	14	17	13	16	12	15	12	14	12	1 1/2	3 3/4
(#19)	B	29	22	26	20	24	18	22	17	21	16	20	16	19	16		
#7	A	33	25	29	23	27	21	25	19	23	18	22	17	21	16	1 3/4	4 3/8
(#22)	B	43	33	38	29	35	27	32	25	30	23	28	22	27	21		
#8	A	37	29	33	26	30	24	28	22	26	20	25	19	24	18	2	5
(#25)	B	49	37	43	33	40	31	37	28	34	27	32	25	31	24		
#9	A	42	33	38	29	34	27	32	25	30	23	28	22	27	21	2 1/4	5 3/4
(#29)	B	55	42	49	38	45	34	41	32	39	30	36	28	35	27		
#10	A	47	37	42	33	39	30	36	28	34	26	32	24	30	23	2 5/8	6 3/8
(#32)	B	62	47	55	42	50	39	47	36	44	34	41	32	39	30		
#11	A	53	41	47	36	43	33	40	31	37	29	35	27	33	26	2 7/8	7 1/8
(#36)	B	68	53	61	47	56	43	52	40	48	37	46	35	43	33		
#14 (#43)	N/A	63	49	56	43	51	40	48	37	45	34	42	32	40	31	3 1/2	8 1/2
#18 (#57)	N/A	84	65	75	58	68	53	63	49	59	46	56	43	53	41	4 1/2	11 3/8

UNCOATED		TABLE 2 - TENSION DEVELOPMENT AND LAP SPLICED LENGTHS FOR UNCOATED BARS (SEE QUALIFYING CASES BELOW)																											
SEE GENERAL SHEET NOTES FOR FURTHER INFORMATION		LENGTHS (IN) PER CONCRETE STRENGTH																											
		f'_c = 4000 PSI				f'_c = 5000 PSI				f'_c = 6000 PSI				f'_c = 7000 PSI				f'_c = 8000 PSI				f'_c = 9000 PSI				f'_c = 10000 PSI OR GREATER			
		12" CASTING POSITION		OTHER BARS		12" CASTING POSITION		OTHER BARS		12" CASTING POSITION		OTHER BARS		12" CASTING POSITION		OTHER BARS		12" CASTING POSITION		OTHER BARS		12" CASTING POSITION		OTHER BARS		12" CASTING POSITION		OTHER BARS	
BAR SIZE	LAP CLASS	CASE 1	CASE 2	CASE 1	CASE 2	CASE 1	CASE 2	CASE 1	CASE 2	CASE 1	CASE 2	CASE 1	CASE 2	CASE 1	CASE 2	CASE 1	CASE 2	CASE 1	CASE 2	CASE 1	CASE 2	CASE 1	CASE 2	CASE 1	CASE 2	CASE 1	CASE 2	CASE 1	CASE 2
#3	A	19	28	15	22	17	25	13	19	15	23	12	18	14	21	12	16	13	20	12	15	13	19	12	15	12	18	12	14
(#10)	B	24	36	19	28	22	33	17	25	20	30	16	23	18	28	16	21	17	26	16	20	16	24	16	19	16	23	16	18
#4	A	25	37	19	29	22	33	17	26	20	31	16	24	19	28	15	22	18	26	14	20	17	25	13	19	16	24	12	18
(#13)	B	32	48	25	37	29	43	22	33	26	40	20	31	25	37	19	28	23	34	18	26	22	32	17	25	21	31	16	24
#5	A	31	47	24	36	28	42	22	32	25	38	20	29	24	35	18	27	22	33	17	25	21	31	16	24	20	30	15	23
(#16)	B	40	60	31	47	36	54	28	42	33	49	25	38	31	46	24	35	29	43	22	33	27	40	21	31	26	38	20	30
#6	A	37	56	29	43	33	50	26	38	31	46	24	35	28	42	22	33	26	40	20	30	25	37	19	29	24	36	18	27
(#19)	B	48	72	37	56	43	65	33	50	40	59	31	46	37	55	28	42	34	51	26	40	32	48	25	37	31	46	24	35
#7	A	54	81	42	63	49	73	37	56	44	66	34	51	41	62	32	47	38	58	30	44	36	54	28	42	35	52	27	40
(#22)	B	70	106	54	81	63	94	49	73	58	86	44	66	53	80	41	62	50	75	38	58	47	70	36	54	45	67	34	52
#8	A	62	93	48	71	55	83	43	64	51	76	39	58	47	70	36	54	44	66	34	51	41	62	32	48	39	59	30	45
(#25)	B	80	121	62	93	72	108	55	83	66	98	51	76	61	91	47	70	57	85	44	66	54	80	41	62	51	76	39	59
#9	A	70	105	54	81	63	94	48	72	57	86	44	66	53	79	41	61	49	74	38	57	47	70	36	54	44	66	34	51
(#29)	B	91	136	70	105	81	122	63	94	74	111	57	86	69	103	53	79	64	96	49	74	61	91	47	70	57	86	44	66
#10	A	79	118	61	91	70	105	54	81	64	96	49	74	59	89	46	69	56	83	43	64	53	79	41	61	50	75	39	58
(#32)	B	102	153	79	118	91	137	70	105	83	125	64	96	77	116	59	89	72	108	56	83	68	102	53	79	65	97	50	75
#11	A	87	131	67	101	78	117	60	90	71	107	55	82	66	99	51	76	62	93	48	71	58	87	45	67	55	83	43	64
(#36)	B	113	170	87	131	101	152	78	117	93	139	71	107	86	128	66	99	80	120	62	93	76	113	58	87	72	108	55	83
#14 (#43)	N/A	105	157	81	121	94	140	72	108	86	128	66	99	79	119	61	91	74	111	57	85	70	105	54	81	66	99	51	77
#18 (#57)	N/A	139	209	107	161	125	187	96	144	114	171	88	131	106	158	81	122	99	148	76	114	93	139	72	107	88	132	68	102

TABLE 2 QUALIFIERS				
	CASE 1	CENTER TO CENTER SPACING OF BARS BEING DEVELOPED OR LAP SPLICED NOT LESS THAN 2*d_b, CLEAR COVER AT LEAST d_b AND OCCURS WITHIN THE STIRRUPS OR TIES OF A BEAM OR COLUMN.	OR	CENTER TO CENTER SPACING OF BARS OF BEING DEVELOPED OR LAP SPLICED AT LEAST 3* d_b AND CLEAR COVER AT LEAST d_b
	CASE 2	CENTER TO CENTER SPACING OF BARS BEING DEVELOPED OR LAP SPLICED NOT LESS THAN 2*d_b, AND NO LESS THAN MINIMUM CLEAR SPACING SPECIFIED IN GENERAL SHEET NOTES.	AND	CLEAR COVER NOT LESS THAN 0.5*d_b AND NO LESS THAN CLEAR COVER SPECIFIED IN GENERAL STRUCTURAL NOTES.

f'_c = 4000 PSI		TABLE 3 (f'_c = 4000 PSI) - TENSION DEVELOPMENT AND LAP SPLICE LENGTHS FOR BARS IN WALLS AND SLABS (IN)																			
SEE GENERAL SHEET NOTES FOR FURTHER INFORMATION		MINIMUM CONCRETE COVER = 0.75"					MINIMUM CONCRETE COVER = 1.00"					MINIMUM CONCRETE COVER = 1.50"					MINIMUM CONCRETE COVER = 2.00"				
		12" CASTING POSITION	OTHER BARS	12" CASTING POSITION	OTHER BARS	MINIMUM CENTER TO CENTER SPACING	12" CASTING POSITION	OTHER BARS	12" CASTING POSITION	OTHER BARS	MINIMUM CENTER TO CENTER SPACING	12" CASTING POSITION	OTHER BARS	12" CASTING POSITION	OTHER BARS	MINIMUM CENTER TO CENTER SPACING	12" CASTING POSITION	OTHER BARS	12" CASTING POSITION	OTHER BARS	MINIMUM CENTER TO CENTER SPACING
		UNCOATED		EPOXY COATED			UNCOATED		EPOXY COATED			UNCOATED		EPOXY COATED			UNCOATED		EPOXY COATED		
#3	A	12	12	15	13	1 7/8	12	12	15	13	1 7/8	12	12	14	12	1 7/8 UNC	12	12	14	12	1 7/8 UNC
(#10)	B	16	16	19	17		16	16	19	17		16	16	18	16	2 5/8 EPOXY	16	16	18	16	2 5/8 EPOXY
#4	A	19	15	24	22	2	15	12	20	17	2 1/2	15	12	18	14	2 1/2 UNC	15	12	18	14	2 1/2 UNC
(#13)	B	24	19	32	28		20	16	25	22		20	16	23	18	3 1/2 EPOXY	20	16	23	18	3 1/2 EPOXY
#5	A	28	21	36	32	2 1/8	22	17	29	26	2 5/8	19	15	24	22	3 1/8	19	15	22	17	3 1/8 UNC
(#16)	B	36	28	47	41		29	22	38	33		24	19	32	28		24	19	29	22	4 3/8 EPOXY
#6	A	37	29	49	43	2 1/4	31	24	40	35	3 3/4	22	17	29	26	3 3/4	22	17	29	26	3 3/4
(#19)	B	48	37	63	56		40	31	52	46		29	22	38	34		29	22	38	34	
#7	A	60	46	78	69	2 3/8	50	38	65	57	2 7/8	37	28	48	43	3 7/8	33	25	43	38	4 3/8
(#22)	B	78	60	102	90		64	50	84	74		48	37	62	55		42	33	55	49	
#8	A	74	57	97	86	2 1/2	62	48	81	72	3	47	36	61	54	4	37	29	49	43	5
(#25)	B	96	74	126	111		80	62	105	93		60	47	79	70		48	37	63	56	
#9	A	90	69	117	104	2 5/8	76	58	99	87	3 1/8	57	44	75	66	4 1/8	46	36	60	53	5 1/8
(#29)	B	117	90	153	135		98	76	128	113		74	57	97	86		60	46	78	69	
#10	A	108	83	141	125	2 7/8	92	70	120	106	3 3/8	70	54	92	81	4 1/4	57	44	74	66	5 1/4
(#32)	B	140	108	183	162		119	92	155	137		91	70	119	105		74	57	97	85	
#11	A	127	98	166	146	3	108	83	141	125	3 1/2	84	65	110	97	4 1/2	67	53	89	79	5 1/2
(#36)	B	165	127	215	190		141	108	184	162		109	84	142	125		89	68	116	102	

f'_c = 5000 PSI		TABLE 3 (f'_c = 5000 PSI) - TENSION DEVELOPMENT AND LAP SPLICE LENGTHS FOR BARS IN WALLS AND SLABS (IN)																			
SEE GENERAL SHEET NOTES FOR FURTHER INFORMATION		MINIMUM CONCRETE COVER = 0.75"					MINIMUM CONCRETE COVER = 1.00"					MINIMUM CONCRETE COVER = 1.50"					MINIMUM CONCRETE COVER = 2.00"				
		12" CASTING POSITION	OTHER BARS	12" CASTING POSITION	OTHER BARS	MINIMUM CENTER TO CENTER SPACING	12" CASTING POSITION	OTHER BARS	12" CASTING POSITION	OTHER BARS	MINIMUM CENTER TO CENTER SPACING	12" CASTING POSITION	OTHER BARS	12" CASTING POSITION	OTHER BARS	MINIMUM CENTER TO CENTER SPACING	12" CASTING POSITION	OTHER BARS	12" CASTING POSITION	OTHER BARS	MINIMUM CENTER TO CENTER SPACING
		UNCOATED		EPOXY COATED			UNCOATED		EPOXY COATED			UNCOATED		EPOXY COATED			UNCOATED		EPOXY COATED		
#3	A	12	12	13	12	1 7/8	12	12	13	12	1 7/8	12	12	12	12	1 7/8 UNC	12	12	12	12	1 7/8 UNC
(#10)	B	16	16	17	16		16	16	17	16		16	16	16	16	2 5/8 EPOXY	16	16	16	16	2 5/8 EPOXY
#4	A	17	13	22	20	2	14	12	18	16	2.5	14	12	16	13	2 1/2 UNC	14	12	16	13	2 1/2 UNC
(#13)	B	22	17	29	25		18	16	23	20		18	16	21	16	3 1/2 EPOXY	18	16	21	16	3 1/2 EPOXY
#5	A	25	19	32	28	2 1/8	20	16	26	23	2 5/8	17	13	22	19	3 1/8	17	13	20	16	3 1/8 UNC
(#16)	B	32	25	42	37		26	20	34	30		22	17	29	25		22	17	26	20	4 3/8 EPOXY
#6	A	33	26	44	39	2 1/4	27	21	36	32	2 3/4	20	16	26	23	3 3/4	20	16	26	23	3 3/4
(#19)	B	43	33	57	50		36	27	46	41		26	20	34	30		26	20	34	30	
#7	A	54	41	70	62	2 3/8	44	34	58	51	2 7/8	33	26	43	38	3 7/8	29	23	38	34	4 3/8
(#22)	B	70	54	91	80		58	44	75	67		43	33	56	49		38	29	50	44	
#8	A	66	51	87	77	2 1/2	56	43	72	64	3	42	32	54	48	4	33	26	44	38	5
(#25)	B	86	67	113	100		72	56	94	83		54	42	71	62		43	33	57	50	
#9	A	80	62	105	93	2 5/8	68	52	88	78	3 1/8	51	40	67	59	4 1/8	41	32	54	48	5 1/8
(#29)	B	105	81	136	120		88	68	114	101		67	51	87	77		54	41	70	62	
#10	A	97	75	126	111	2 7/8	82	63	107	95	3 3/8	63	48	82	72	4 1/4	51	39	67	59	5 1/4
(#32)	B	126	97	164	145		106	82	139	123		82	63	107	94		66	51	86	76	
#11	A	113	87	148	131	3	97	75	126	112	3 1/2	75	58	98	86	4 1/2	61	47	80	71	5 1/2
(#36)	B	147	113	192	170		126	97	164	145		97	75	127	112		79	61	104	91	

TABLE 4 - TENSION DEVELOPMENT LENGTHS OF STANDARD HOOKS AND ASTM A970 TERMINATORS														
SEE GENERAL NOTES	LENGTHS (IN) PER CONCRETE STRENGTH													
	f'_c = 4000 PSI		f'_c = 5000 PSI		f'_c = 6000 PSI		f'_c = 7000 PSI		f'_c = 8000 PSI		f'_c = 9000 PSI		f'_c = 10000 PSI	
BAR SIZE	UNCOATED	EPOXY	UNCOATED	EPOXY	UNCOATED	EPOXY	UNCOATED	EPOXY	UNCOATED	EPOXY	UNCOATED	EPOXY	UNCOATED	EPOXY
#3 (#10)	7	9	7	8	6	7	6	7	6	6	6	6	6	6
#4 (#13)	10	12	9	11	8	10	7	9	7	8	7	8	6	7
#5 (#16)	12	15	11	13	10	12	9	11	9	10	8	10	8	9
#6 (#19)	15	17	13	16	12	14	11	13	10	12	10	12	9	11
#7 (#22)	17	20	15	18	14	17	13	15	12	14	11	14	11	13
#8 (#25)	19	23	17	21	16	19	15	18	14	16	13	15	12	15
#9 (#29)	22	26	19	23	18	21	16	20	15	18	15	17	14	17
#10 (#32)	24	29	22	26	20	24	19	22	17	21	16	20	16	19
#11 (#36)	27	32	24	29	22	27	21	25	19	23	18	22	17	21
#14 (#43)	32	39	29	35	27	32	25	30	23	28	22	26	21	25
#18 (#57)	43	52	39	46	35	42	33	39	31	37	29	35	27	33

TABLE 5 - COMPRESSION DEVELOPMENT AND LAP SPLICE LENGTHS FOR UNCOATED AND EXPOXY-COATED BARS								
SEE GENERAL NOTES	LENGTHS (IN) PER CONCRETE STRENGTH							
	f'_c = 4000 PSI	f'_c = 5000 PSI	f'_c = 6000 PSI	f'_c = 7000 PSI	f'_c = 8000 PSI	f'_c = 9000 PSI	f'_c = 10000 PSI	LAP SPLICE
#3 (#10)	8	8	8	8	8	8	8	12
#4 (#13)	10	9	9	9	9	9	9	15
#5 (#16)	12	12	12	12	12	12	12	19
#6 (#19)	15	14	14	14	14	14	14	23
#7 (#22)	17	16	16	16	16	16	16	27
#8 (#25)	19	18	18	18	18	18	18	30
#9 (#29)	22	21	21	21	21	21	21	34
#10 (#32)	24	23	23	23	23	23	23	38
#11 (#36)	27	26	26	26	26	26	26	43
#14 (#43)	32	31	31	31	31	31	31	N/A
#18 (#57)	43	41	41	41	41	41	41	N/A

TABLE 6 - TENSION DEVELOPMENT LENGTHS FOR PLAIN WELDED WIRE FABRIC									
WIRE	WIRE SPACING (in)	DEVELOPMENT LENGTH (in)				LAP SPLICE (in)			
		CROSS WIRE SPACING (in)				CROSS WIRE SPACING (in)			
		4	6	8	12	4	6	8	12
W0.5 TO W2	4	6	8	10	14	8	8	10	14
	6	6	8	10	14	6	8	10	14
	8	6	8	10	14	6	8	10	14
	12	6	8	10	14	6	8	10	14
W2.5 TO W3.5	4	9	9	10	14	14	14	14	14
	6	6	8	10	14	9	9	10	14
	8	6	8	10	14	7	8	10	14
	12	6	8	10	14	6	8	10	14
W4 TO W4.5	4	12	12	12	14	18	18	18	18
	6	8	8	10	14	12	12	12	14
	8	6	8	10	14	9	9	10	14
	12	6	8	10	14	6	8	10	14
W5 TO W5.5	4	15	15	15	15	22	22	22	22
	6	10	10	10	14	15	15	15	15
	8	8	8	10	14	11	11	11	14
	12	6	8	10	14	8	8	10	14
W6	4	16	16	16	16	24	24	24	24
	6	11	12	11	14	16	16	16	16
	8	8	8	10	14	12	12	12	14
	12	6	8	10	14	8	8	10	14

SHEET NOTES

1. REINFORCING BARS CONFORMING TO ASTM A615 OR A706 AND NORMAL WEIGHT CONCRETE.
2. TABULATED VALUES FOR BEAMS AND COLUMNS ARE BASED ON TRANSVERSE REINFORCEMENT MEETING MINIMUM CODE REQUIREMENTS.
3. CASES 1, 2, AND 3 ARE DEFINED AS FOLLOWS:
   A. CASE 1: COVER AT LEAST 2.0d/b AND C-C SPACING AT LEAST 5.0d/b
   B. CASE 2: COVER AT LEAST 1.0d/b AND C-C SPACING AT LEAST 3.0d/b
   C. CASE 3: COVER LESS THAN 1.0d/b AND/OR C-C SPACING LESS THAN 3.0d/b BUT 2.0d/b MIN
4. LAP SPLICE LENGTHS ARE MULTIPLES OF TENSION DEVELOPMENT LENGTHS; CLASS A = 1.0 l/d AND CLASS B = 1.3 l/d
5. LAP SPLICES OF #14 AND #18 BARS ARE NOT ALLOWED. TABULATED VALUES ARE TENSION DEVELOPMENT LENGTHS.
6. TOP BARS ARE HORIZONTAL BARS WITH MORE THAN 12" OF CONCRETE CAST BELOW.
7. FOR LIGHTWEIGHT AGGREGATE CONCRETE MULTIPLY TABULATED VALUES BY 1.3.
8. WHEN LAPPING A SMALLER BAR WITH A LARGER DIAMETER BAR USE THE LAP LENGTH FOR THE SMALLER DIAMETER BAR OR TENSION DEVELOPMENT LENGTH OF LARGER BAR, WHICHEVER IS GREATER.
9. ( ) INDICATES METRIC BAR SIZE (mm).
10. EPOXY COATING OF BARS LARGER THAN #6 IS NOT ALLOWED.
11. TABULATED VALUES APPLY ONLY TO INDIVIDUAL BARS IN COLUMNS AND NOT TO BUNDLED BARS. BUNDLED BARS ARE GROUPS OF PARALLEL REINFORCING BARS, NO MORE THAN FOUR, BUNDLED IN CONTACT TO ACT AS A UNIT. LAP SPLICES ARE NOT ALLOWED FOR BUNDLED BARS AND MECHANICAL SPLICES MUST BE USED. SEE COLUMN SCHEDULE SHEET FOR ADDITIONAL REQUIREMENTS.
12. TABULATED VALUES DO NOT APPLY FOR USE IN HIGH SEISMIC SPECIAL MOMENT FRAMES AND SHEAR WALLS. SEE SPECIAL MOMENT FRAME AND / OR SHEAR WALL DETAILS FOR DEVELOPMENT LENGTH AND SPLICE REQUIREMENTS.

UNCW
UNIVERSITY of NORTH CAROLINA WILMINGTON
601 S COLLEGE ROAD
WILMINGTON, NORTH CAROLINA 28403

PARKING DECK II AND SURFACE PARKING (DESIGN-BUILD)
SOUTH CAMPUS - 4965 RIEGEL ROAD

SCO ID NUMBER: 18-19226-01A
CODE: 41828
ITEM: 301

CONTRACTOR
Balfour Beatty Construction

DESIGNER
CLARKNEXSEN
1523 ELIZABETH AVENUE, SUITE 300
CHARLOTTE, NORTH CAROLINA 28204
704.377.8800
CLARK NEXSEN LICENSE NUMBER: C-1028

WALKER CONSULTANTS
13860 Ballantyne Corporate Place
Suite 140
Charlotte, NC 28277
T: 704.247.6230
www.walkerconsultants.com
NC License No. F-0518

McKIM&CREED
CIVIL ENGINEER
243 NORTH FRONT STREET
WILMINGTON, NORTH CAROLINA
28401
910.343.1048

PROFESSIONAL SEAL

NOT FOR CONSTRUCTION
NORTH CAROLINA PROFESSIONAL SEAL 028007 ENGINEER JOEY D. ROWLAND

SUBMITTAL
04/15/2019
CONSTRUCTION DOCUMENT SUBMITTAL 01

REVISIONS

KEY PLAN

SHEET
LAP SPLICE SCHEDULES

S-650

DESIGN: Designer
DRAWN: Author
REVIEW: Checker

CN PROJECT NUMBER

4/15/2019 5:35:48 PM
C:\Revit Projects\UNC Wilmington Deck II_r17_joy.grantham.rvt

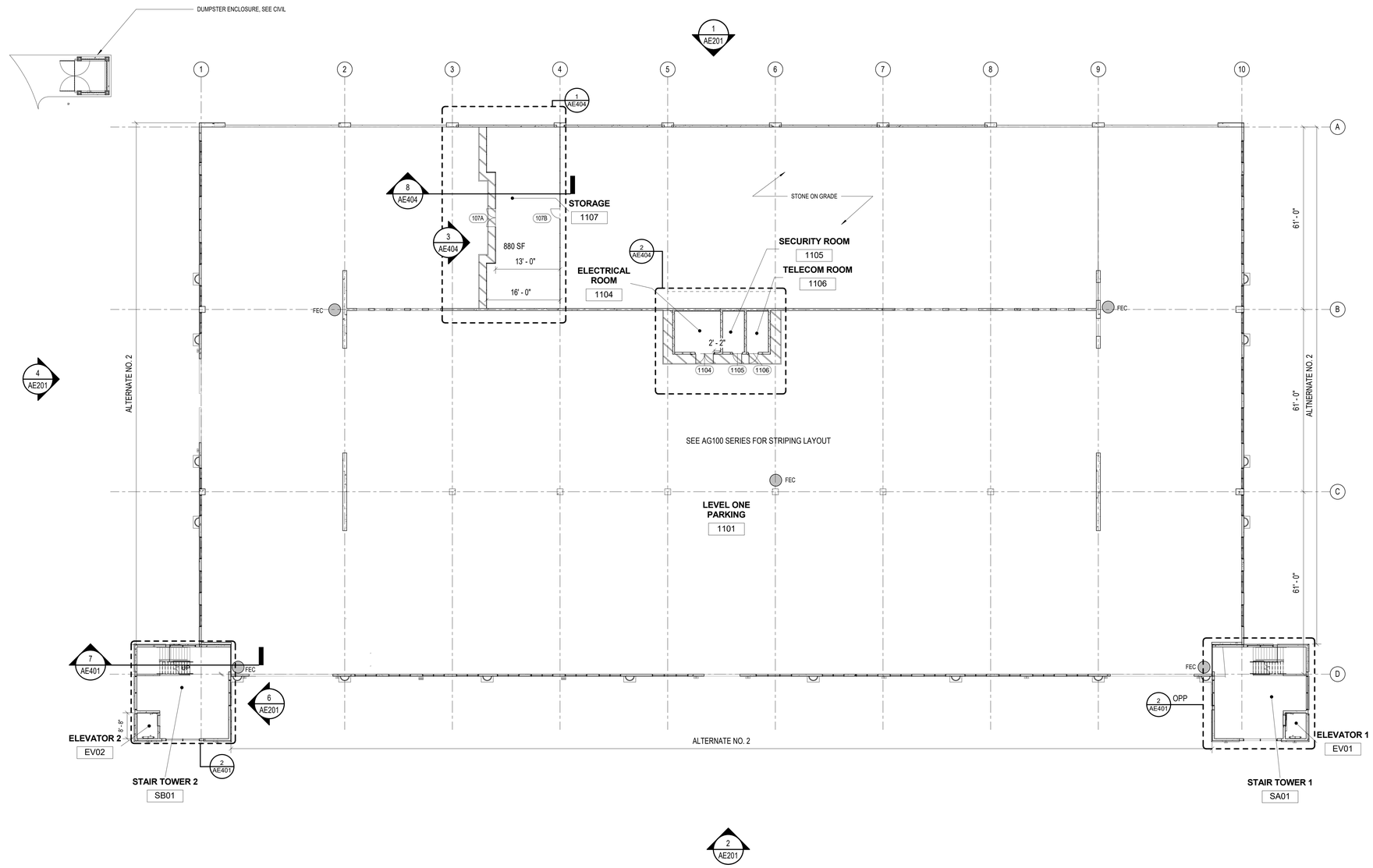

1 LEVEL ONE FLOOR PLAN
1/16" = 1'-0"

NOTE: THERE ARE NO RATED PARTITIONS WITHIN STRUCTURE

SCHEDULE OF ALTERNATES

ALTERNATE NO. 1A: PAINT / STAIN DECK UNDERSIDE WITH A WHITE FINISH WITH 1-YEAR WARRANTY. PAINT ALL SPRINKLER AND STORM PIPING (INCLUDES VERTICAL, HORIZONTAL AND DIAGONAL PIPES.)

ALTERNATE NO. 1B: PAINT / STAIN VERTICAL SURFACES WITH A WHITE FINISH WITH 1-YEAR WARRANTY

ALTERNATE NO. 2: PROVIDE ALUMINUM NON-GLAZED FRAMES AT OPENINGS INDICATED IN THE ARCHITECTURAL DRAWINGS. ALL STAIR WINDOWS AND FRAMES TO REMAIN IN BASE BID.

ALTERNATE NO. 3A: ADD DOMESTIC WATER SOURCE FROM THE SOUTHWEST SITE NEW FIRE HYDRANT TO THE WEST SIDE OF THE DECK WITH A 2" REDUCED PRESSURE BACKFLOW PREVENTER, HOTBOX, DOMESTIC WATER BOOSTER PUMP, AND 2" DOMESTIC WATER MAIN STUBBED INTO THE DECK.

ALTERNATE NO. 3B: PROVIDE 2" PIPING AND TWO (2) HOSE CONNECTIONS ON LEVELS 1 THROUGH 5 AT EACH END OF RAMP.

ALTERNATE NO. 4: PROVIDE BRICK EDGE BANDING AT NEW SIDEWALKS AS INDICATED ON THE CIVIL PLANS.

ALTERNATE NO. 5: PROVIDE 304 STAINLESS STEEL STAIR RAILING IN LIEU OF HOT DIPPED GLAVANIZED.

UNCW
UNIVERSITY of NORTH CAROLINA WILMINGTON
601 S COLLEGE ROAD
WILMINGTON, NORTH CAROLINA 28403

PARKING DECK II AND SURFACE PARKING (DESIGN-BUILD)
SOUTH CAMPUS - 4965 RIEGEL ROAD

SCO ID NUMBER: 18-19226-01A
CODE: 41828
ITEM: 301

CONTRACTOR
Balfour Beatty Construction

DESIGNER
CLARKNEXSEN
1523 ELIZABETH AVENUE, SUITE 300
CHARLOTTE, NORTH CAROLINA 28204
704·377·8800

CLARK NEXSEN LICENSE NUMBER: C-1028

WALKER CONSULTANTS
13860 Ballantyne Corporate Place
Suite 140
Charlotte, NC 28277
T: 704.247.6230
www.walkerconsultants.com
NC License No. F-0518

McKIM&CREED
CIVIL ENGINEER
243 NORTH FRONT STREET
WILMINGTON, NORTH CAROLINA
28401
910.343.1048

PROFESSIONAL SEAL
NOT FOR CONSTRUCTION
CLARK NEXSEN CERT NO. 50680 NORTH CAROLINA
GARY T. RUNKINS REGISTERED ARCHITECT 7730 NORTH CAROLINA
NC CORPORATE ENGINEERING LICENSE #C-1028

SUBMITTAL
04/15/2019
CONSTRUCTION DOCUMENT SUBMITTAL 01

REVISIONS

KEY PLAN

SHEET
LEVEL ONE FLOOR PLAN

AE101

DESIGN: Designer
DRAWN: Author
REVIEW: Checker

CN 8112

4/15/2019 5:44:31 PM
C:\Revit Projects\8112_UNCW_Parking_Deck_II_A17_rcpurdy.rvt

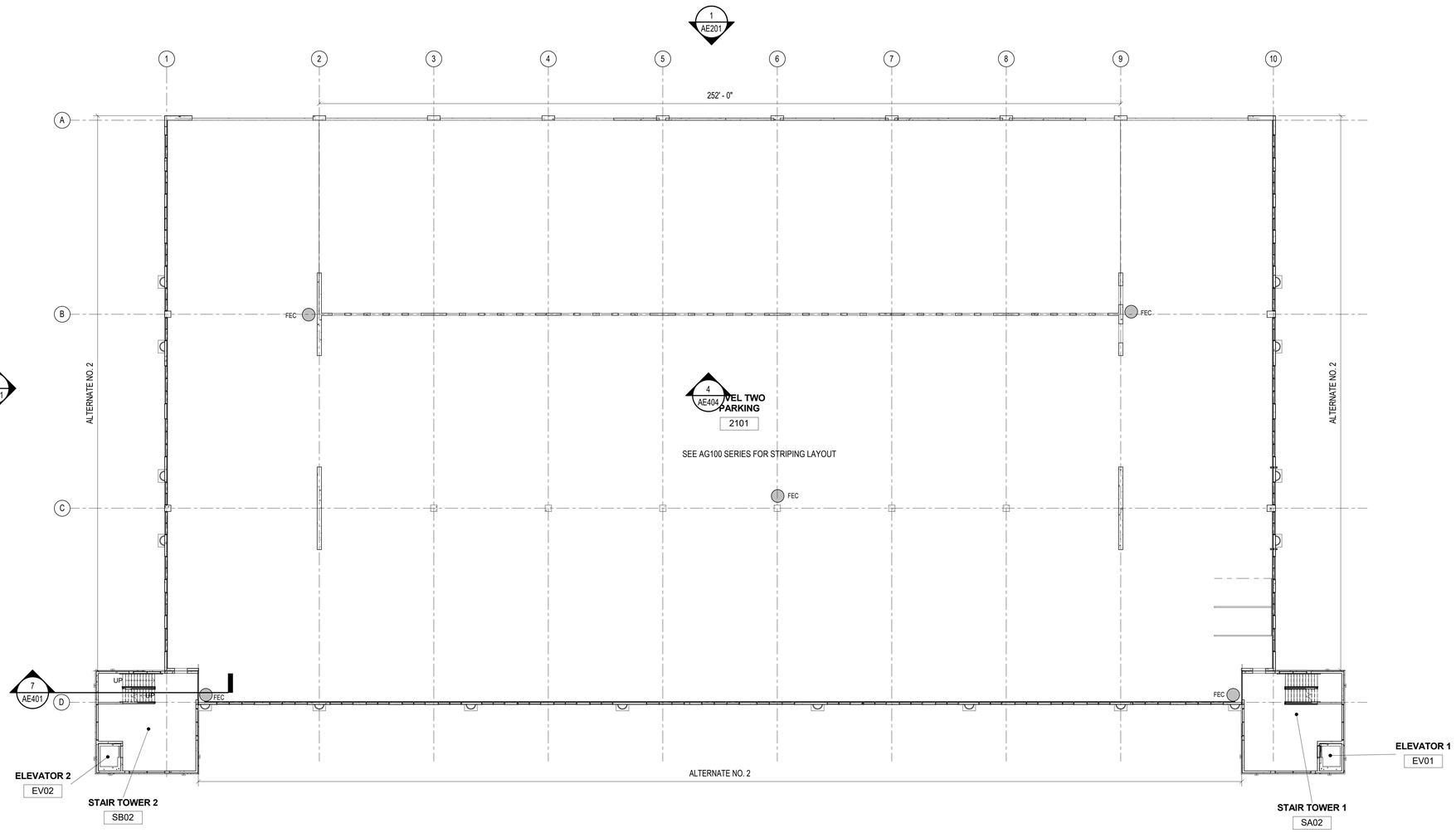

1 LEVEL TWO - FOUR FLOOR PLAN
1/16" = 1'-0"

NOTE: THERE ARE NO RATED PARTITIONS WITHIN STRUCTURE

UNCW
UNIVERSITY of NORTH CAROLINA WILMINGTON
601 S COLLEGE ROAD
WILMINGTON, NORTH CAROLINA 28403

PARKING DECK II AND SURFACE PARKING (DESIGN-BUILD)
SOUTH CAMPUS - 4965 RIEGEL ROAD

SCO ID NUMBER: 18-19226-01A
CODE: 41828
ITEM: 301

CONTRACTOR
Balfour Beatty Construction

DESIGNER
CLARKNEXSEN
1523 ELIZABETH AVENUE, SUITE 300
CHARLOTTE, NORTH CAROLINA 28204
704·377·8800

CLARK NEXSEN LICENSE NUMBER: C-1028

WALKER CONSULTANTS
13860 Ballantyne Corporate Place
Suite 140
Charlotte, NC 28277
T: 704.247.6230
www.walkerconsultants.com
NC License No. F-0518

McKIM&CREED
CIVIL ENGINEER
243 NORTH FRONT STREET
WILMINGTON, NORTH CAROLINA
28401
910.343.1048

PROFESSIONAL SEAL
NOT FOR CONSTRUCTION
CLARK NEXSEN NORTH CAROLINA CERT NO. 50680
GARY T. RUNKLES REGISTERED ARCHITECT 7730 NORTH CAROLINA
NC CORPORATE ENGINEERING LICENSE #C-1028

SUBMITTAL
04/15/2019
CONSTRUCTION DOCUMENT SUBMITTAL 01

REVISIONS

KEY PLAN

SHEET
LEVEL TWO - FOUR FLOOR PLAN

AE102

DESIGN: Designer
DRAWN: Author
REVIEW: Checker

CN 8112

4/15/2019 5:44:34 PM
C:\Revit Projects\8112_UNCW_Parking_Deck_II_A17_rcpurdy.rvt

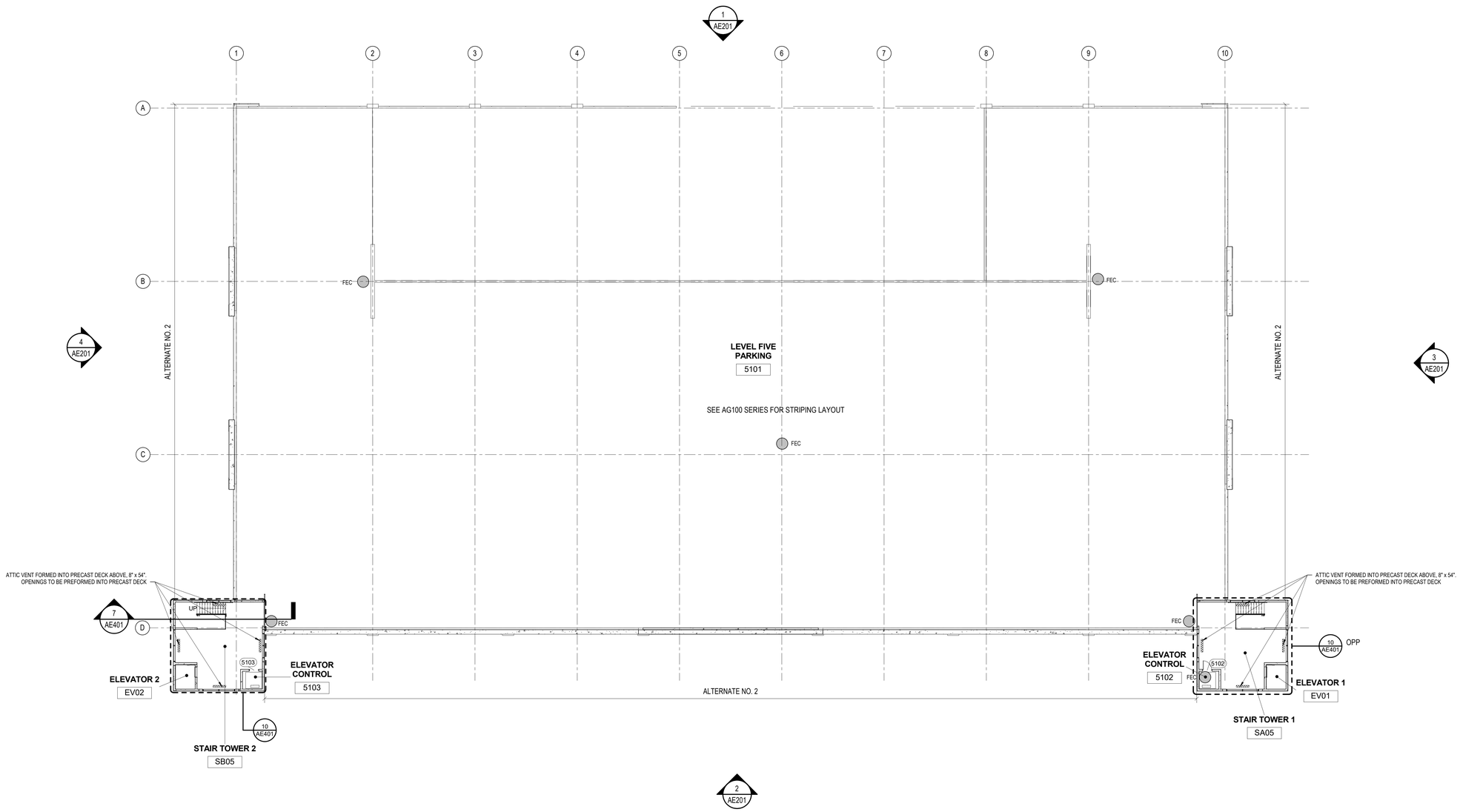

1 LEVEL FIVE PLAN
1/16" = 1'-0"

NOTE: THERE ARE NO RATED PARTITIONS WITHIN STRUCTURE

UNCW
UNIVERSITY of NORTH CAROLINA WILMINGTON
601 S COLLEGE ROAD
WILMINGTON, NORTH CAROLINA 28403

PARKING DECK II AND SURFACE PARKING (DESIGN-BUILD)
SOUTH CAMPUS - 4965 RIEGEL ROAD

SCO ID NUMBER: 18-19226-01A
CODE: 41828
ITEM: 301

CONTRACTOR
Balfour Beatty Construction

DESIGNER
CLARKNEXSEN
1523 ELIZABETH AVENUE, SUITE 300
CHARLOTTE, NORTH CAROLINA 28204
704·377·8800

CLARK NEXSEN LICENSE NUMBER: C-1028

WALKER CONSULTANTS
13860 Ballantyne Corporate Place
Suite 140
Charlotte, NC 28277
T: 704.247.6230
www.walkerconsultants.com
NC License No. F-0518

McKIM&CREED
CIVIL ENGINEER
243 NORTH FRONT STREET
WILMINGTON, NORTH CAROLINA
28401
910.343.1048

PROFESSIONAL SEAL
CLARK NEXSEN CERT NO. 50680 NORTH CAROLINA
GARY T. RUNLOW REGISTERED ARCHITECT 7730 NORTH CAROLINA
NOT FOR CONSTRUCTION
NC CORPORATE ENGINEERING LICENSE #C-1028

SUBMITTAL
04/15/2019
CONSTRUCTION DOCUMENT SUBMITTAL 01

REVISIONS

KEY PLAN

SHEET
LEVEL FIVE FLOOR PLAN

AE103

DESIGN: Designer
DRAWN: Author
REVIEW: Checker

CN 8112

4/15/2019 5:44:36 PM
C:\Revit Projects\8112_UNCW_Parking_Deck_II_A17_rcpurdy.rvt

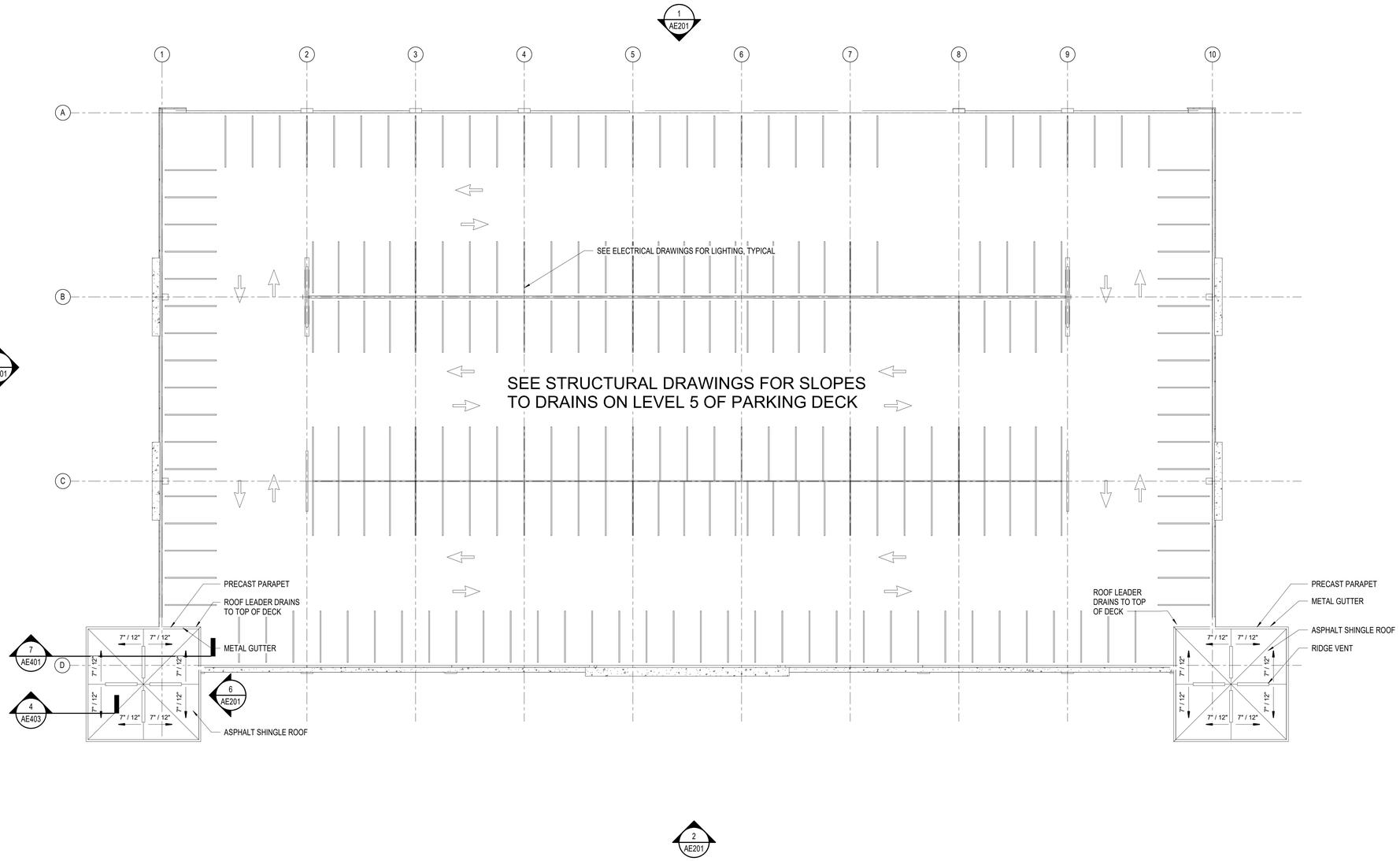

1 ROOF PLAN
1/16" = 1'-0"

UNCW
UNIVERSITY of NORTH CAROLINA WILMINGTON
601 S COLLEGE ROAD
WILMINGTON, NORTH CAROLINA 28403

PARKING DECK II AND SURFACE
PARKING (DESIGN-BUILD)
SOUTH CAMPUS - 4965 RIEGEL ROAD

SCO ID NUMBER: 18-19226-01A
CODE: 41828
ITEM: 301

CONTRACTOR
Balfour Beatty
Construction

DESIGNER
CLARKNEXSEN
1523 ELIZABETH AVENUE, SUITE 300
CHARLOTTE, NORTH CAROLINA 28204
704·377·8800

CLARK NEXSEN LICENSE NUMBER: C-1028

WALKER CONSULTANTS
13860 Ballantyne Corporate Place
Suite 140
Charlotte, NC 28277
T: 704.247.6230
www.walkerconsultants.com
NC License No. F-0518

McKIM&CREED
CIVIL ENGINEER
243 NORTH FRONT STREET
WILMINGTON, NORTH CAROLINA
28401
910.343.1048

PROFESSIONAL SEAL
NOT FOR CONSTRUCTION
CLARK NEXSEN CERT. NO. 50680 NORTH CAROLINA
GARY T. RUNIONS REGISTERED ARCHITECT 7730 NORTH CAROLINA
NC CORPORATE ENGINEERING LICENSE #C-1028

SUBMITTAL
04/15/2019
CONSTRUCTION DOCUMENT
SUBMITTAL 01

REVISIONS

KEY PLAN

SHEET
ROOF PLAN

AE104

DESIGN: Designer
DRAWN: Author
REVIEW: Checker

CN 8112

4/15/2019 5:44:38 PM
C:\Revit Projects\8112_UNCW_Parking_Deck_II_A17_mcpardy.rvt

KEYNOTES	
KEYNOTE	DESCRIPTION
E01	BUILDING ADDRESS SIGNAGE @ 10'-6" AFF TO CL OF TEXT
E02	WALL WASHER LIGHTING @ 17'0" AFF TO CL OF FIXTURE, TYP.
E03	DOWNLIGHTING @ 10'6" AFF TO CL OF FIXTURE, TYP.
E04	FDC, SEE PLUMBING DWG
E06	GUTTER
E07	3" BUILDING EXPANSION JOINT, SEE STRUCTURAL DWG

NOTE: ALL BRICK MASONRY IS TO BE PLACED IN A RUNNING BOND PATTERN.

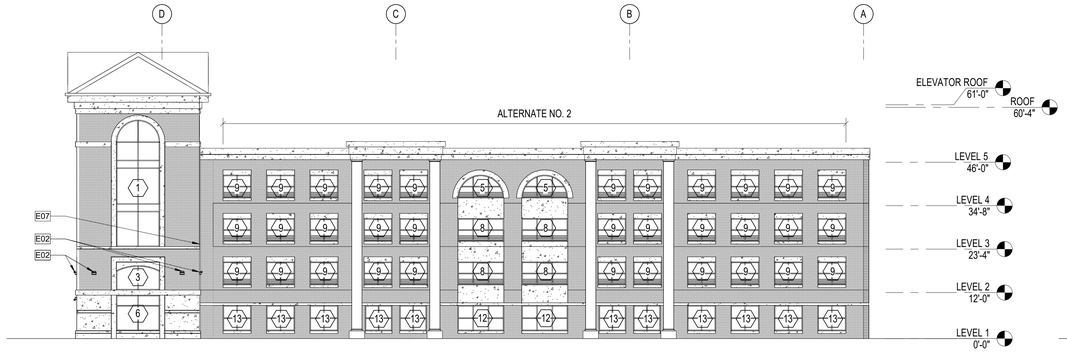

3 EXTERIOR ELEVATION - EAST
1/16" = 1'-0" REF 1 / AE102

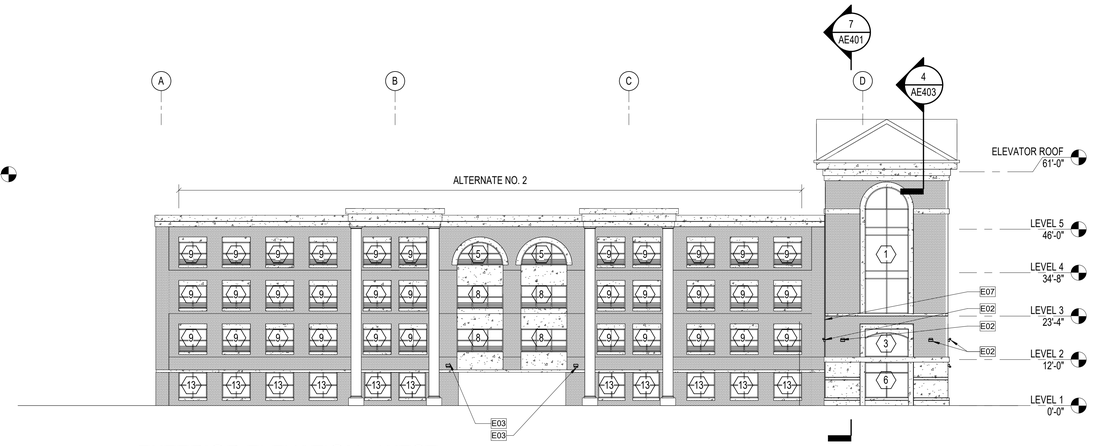

4 EXTERIOR ELEVATION - WEST
1/16" = 1'-0" REF 1 / AE101

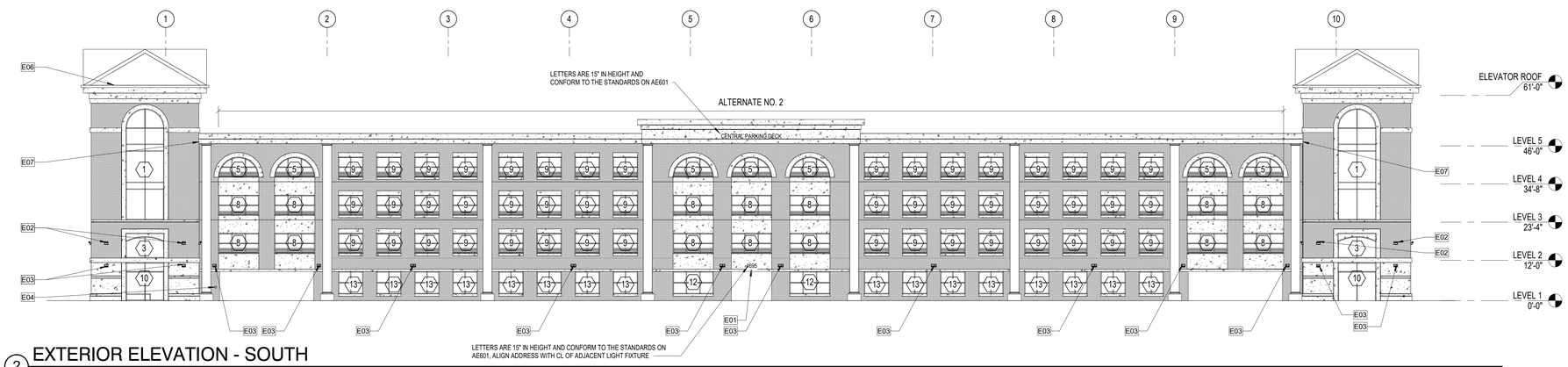

2 EXTERIOR ELEVATION - SOUTH
1/16" = 1'-0" REF 1 / AE101

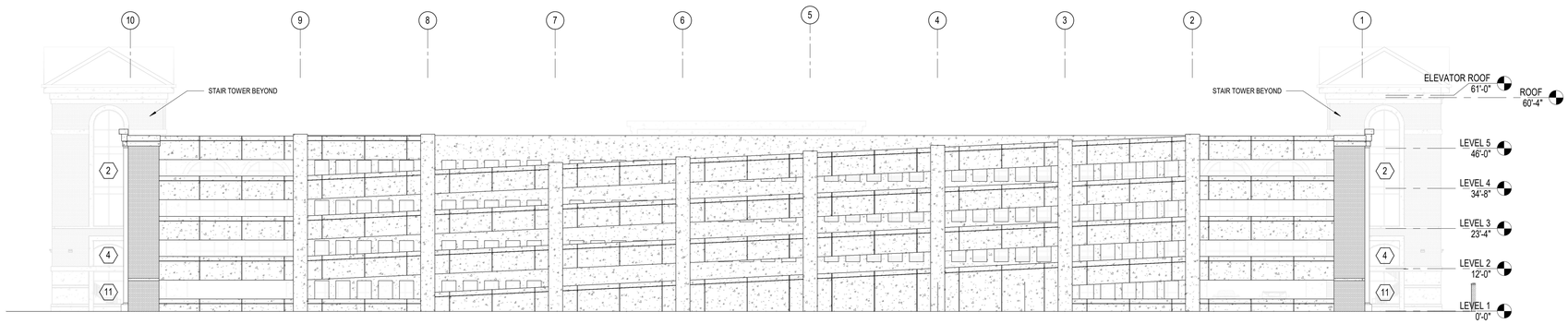

1 EXTERIOR ELEVATION - NORTH
1/16" = 1'-0" REF 1 / AE101

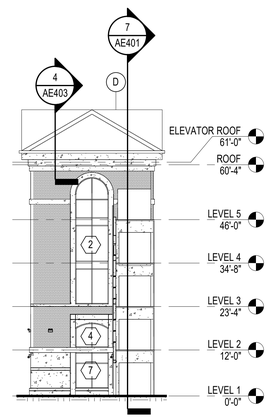

6 EXTERIOR ELEVATION - STAIR AT ENTRY
1/16" = 1'-0" REF 1 / AE101

UNCW
UNIVERSITY of NORTH CAROLINA WILMINGTON
601 S COLLEGE ROAD
WILMINGTON, NORTH CAROLINA 28403

PARKING DECK II AND SURFACE PARKING (DESIGN-BUILD)
SOUTH CAMPUS - 4965 RIEGEL ROAD

SCO ID NUMBER: 18-19226-01A
CODE: 41828
ITEM: 301

CONTRACTOR
Balfour Beatty Construction

DESIGNER
CLARKNEXSEN
1523 ELIZABETH AVENUE, SUITE 300
CHARLOTTE, NORTH CAROLINA 28204
704·377·8800
CLARK NEXSEN LICENSE NUMBER: C-1028

WALKER CONSULTANTS
13860 Ballantyne Corporate Place
Suite 140
Charlotte, NC 28277
T: 704.247.6230
www.walkerconsultants.com
NC License No. F-0518

McKIM&CREED
CIVIL ENGINEER
243 NORTH FRONT STREET
WILMINGTON, NORTH CAROLINA
28401
910.343.1048

PROFESSIONAL SEAL
CLARK NEXSEN CERT NO. 50680 NORTH CAROLINA
GARY T. RUNYONS REGISTERED ARCHITECT 7730 NORTH CAROLINA
NOT FOR CONSTRUCTION
NC CORPORATE ENGINEERING LICENSE #C-1028

SUBMITTAL
04/15/2019
CONSTRUCTION DOCUMENT SUBMITTAL 01

REVISIONS

KEY PLAN

SHEET
EXTERIOR ELEVATIONS

AE201

DESIGN: Designer
DRAWN: Author
REVIEW: Checker

CN 8112

4/15/2019 5:44:48 PM
C:\Revit Projects\8112_UNCW_Parking_Deck_II_AA17_rsparsly.rvt

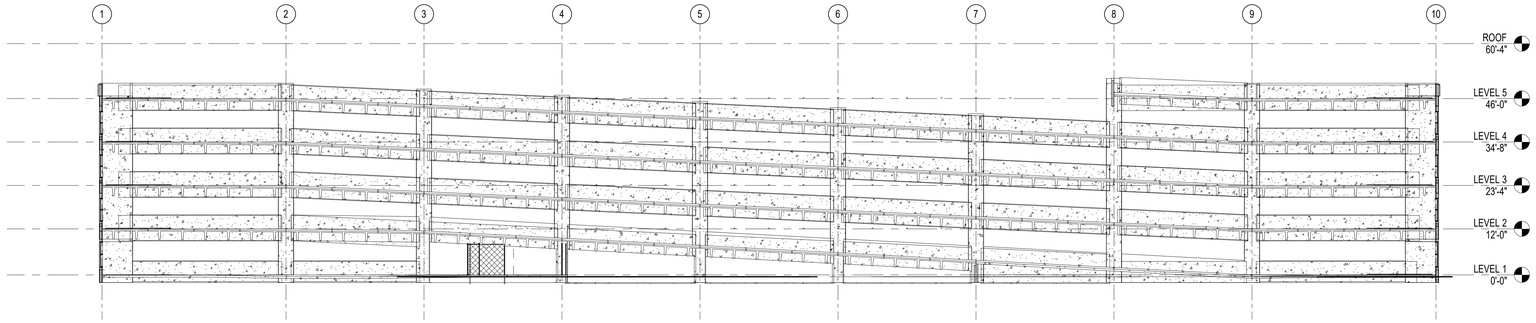

3 LONGITUDIAL BUILDING SECTION BETWEEN COL. LINES A AND B - LOOKING NORTH
1/16" = 1'-0"

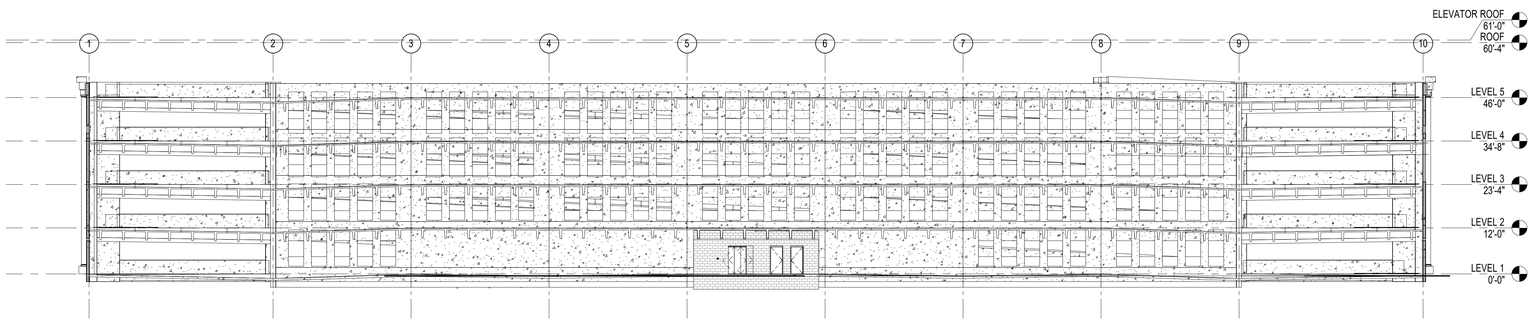

2 LONGITUDINAL BUILDING SECTION BETWEEN COL. LINE B AND C - LOOKING NORTH
1/16" = 1'-0"

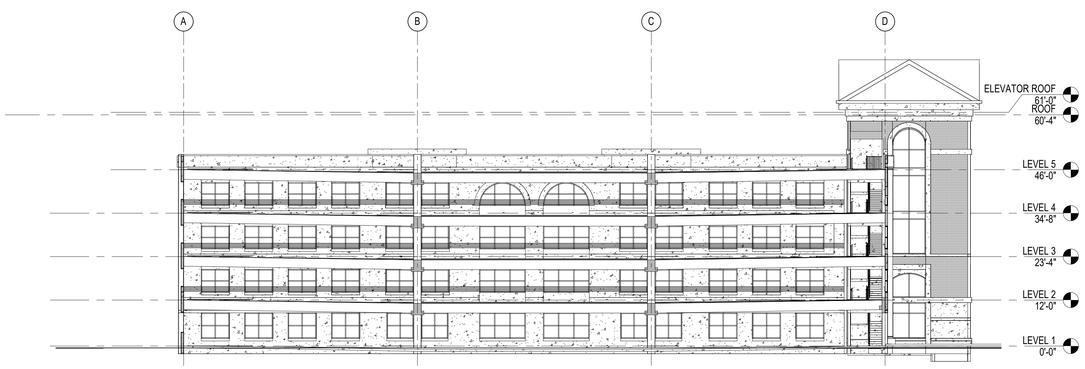

1 LATITUDINAL BUILDING SECTION BETWEEN COL. LINES 9 AND 10 - LOOKING EAST
1/16" = 1'-0"

UNCW
UNIVERSITY of NORTH CAROLINA WILMINGTON
601 S COLLEGE ROAD
WILMINGTON, NORTH CAROLINA 28403

PARKING DECK II AND SURFACE PARKING (DESIGN-BUILD)
SOUTH CAMPUS - 4965 RIEGEL ROAD

SCO ID NUMBER: 18-19226-01A
CODE: 41828
ITEM: 301

CONTRACTOR
Balfour Beatty Construction

DESIGNER
CLARKNEXSEN
1523 ELIZABETH AVENUE, SUITE 300
CHARLOTTE, NORTH CAROLINA 28204
704·377·8800

CLARK NEXSEN LICENSE NUMBER: C-1028

WALKER CONSULTANTS
13860 Ballantyne Corporate Place
Suite 140
Charlotte, NC 28277
T: 704.247.6230
www.walkerconsultants.com
NC License No. F-0518

McKIM&CREED
CIVIL ENGINEER
243 NORTH FRONT STREET
WILMINGTON, NORTH CAROLINA
28401
910.343.1048

PROFESSIONAL SEAL
NOT FOR CONSTRUCTION
CLARK NEXSEN NORTH CAROLINA CERT NO. 50680
GARY T. RUNKONS REGISTERED ARCHITECT 7730 NORTH CAROLINA U.S.A.

NC CORPORATE ENGINEERING LICENSE #C-1028

SUBMITTAL
04/15/2019
CONSTRUCTION DOCUMENT SUBMITTAL 01

REVISIONS

KEY PLAN

SHEET
BUILDING SECTIONS

AE301

DESIGN: Designer
DRAWN: Author
REVIEW: Checker

CN 8112

4/15/2019 5:44:58 PM
C:\Revit Projects\8112_UNCW_Parking_Deck_II_A17_nopurdy.rvt

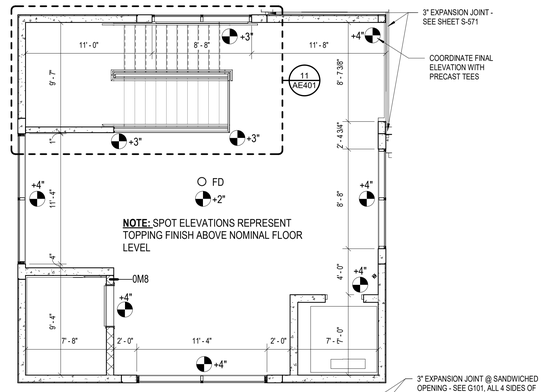

10 WEST TOWER PLAN - LEVEL 5
3/16" = 1'-0"

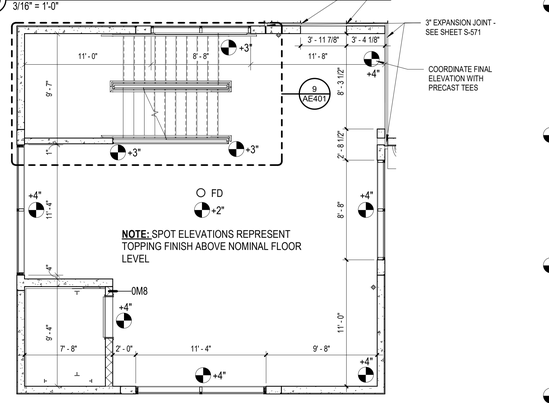

8 WEST TOWER PLAN - LEVEL 4
3/16" = 1'-0"

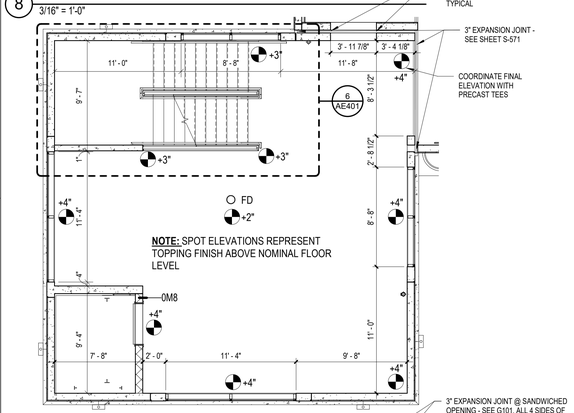

5 WEST TOWER PLAN - LEVEL 3
3/16" = 1'-0"

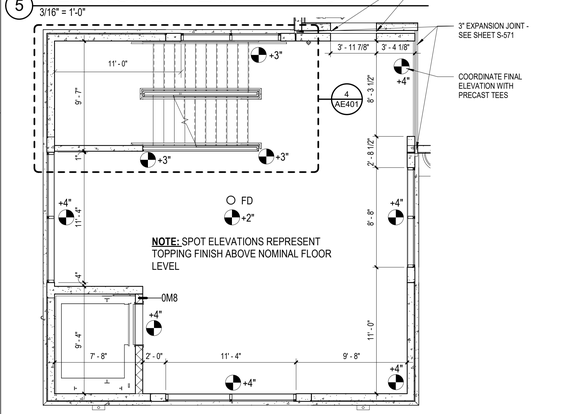

3 WEST TOWER PLAN - LEVEL 2
3/16" = 1'-0"

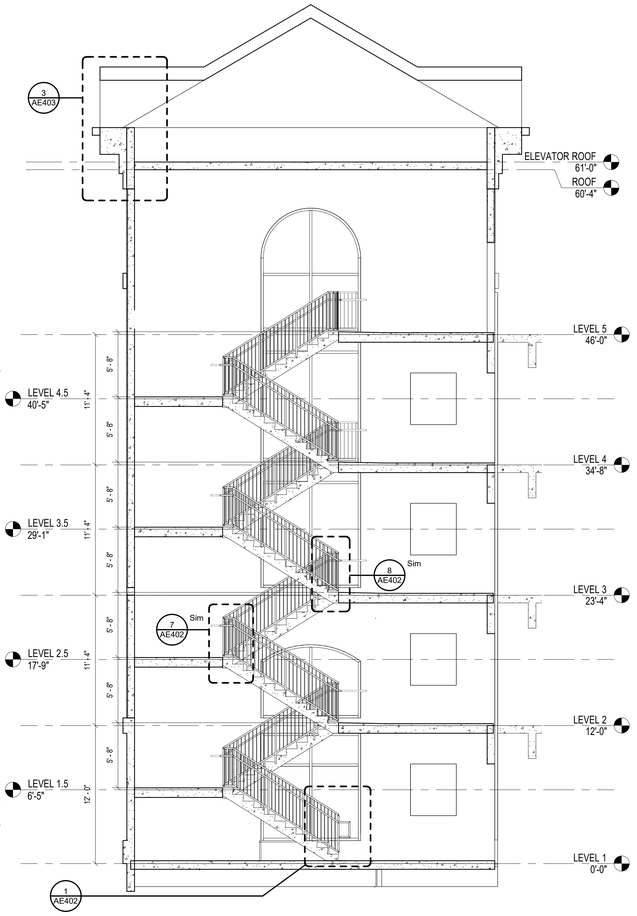

7 WEST STAIR TOWER SECTION
3/16" = 1'-0"

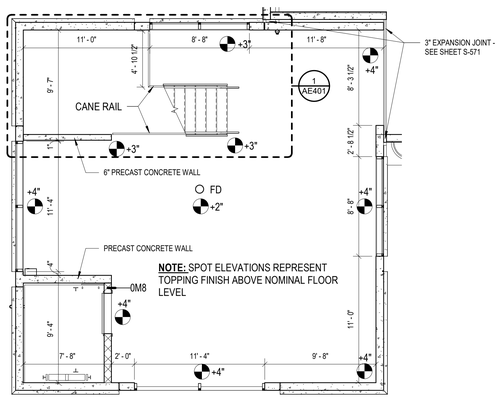

2 WEST TOWER PLAN - LEVEL 1
3/16" = 1'-0"

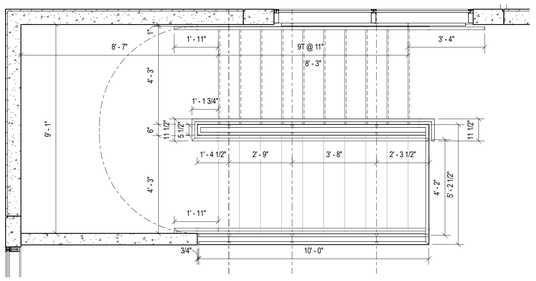

11 WEST TOWER STAIR - LEVEL 5
3/8" = 1'-0"

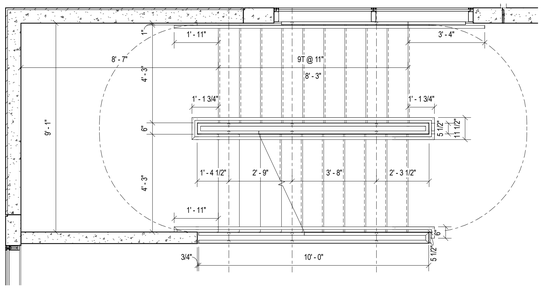

9 WEST TOWER STAIR - LEVEL 4
3/8" = 1'-0"

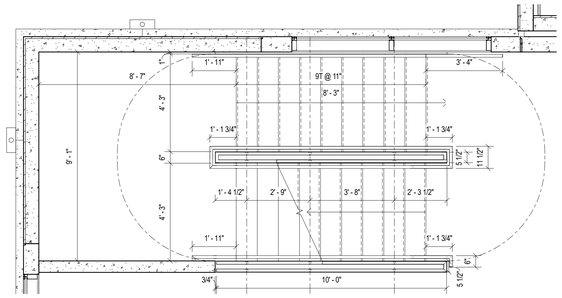

6 WEST TOWER STAIR - LEVEL 3
3/8" = 1'-0"

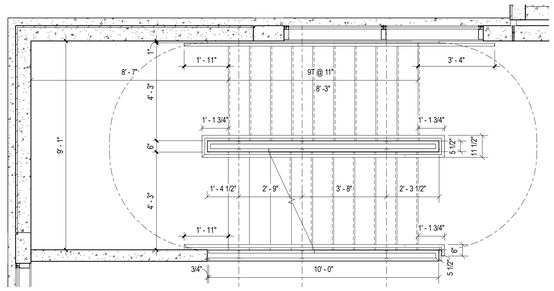

4 WEST TOWER STAIR - LEVEL 2
3/8" = 1'-0"

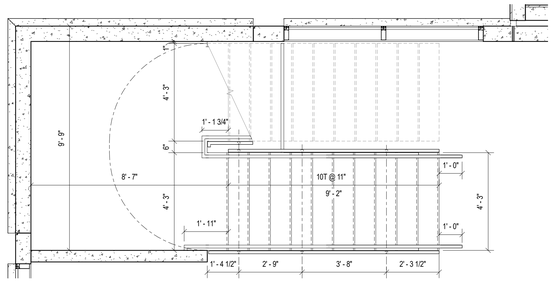

1 WEST TOWER STAIR - LEVEL 1
3/8" = 1'-0"

UNCW
UNIVERSITY of NORTH CAROLINA WILMINGTON
601 S COLLEGE ROAD
WILMINGTON, NORTH CAROLINA 28403

PARKING DECK II AND SURFACE PARKING (DESIGN-BUILD)
SOUTH CAMPUS - 4965 RIEGEL ROAD

SCO ID NUMBER: 18-19226-01A
CODE: 41828
ITEM: 301

CONTRACTOR
Balfour Beatty Construction

DESIGNER
CLARKNEXSEN
1523 ELIZABETH AVENUE, SUITE 300
CHARLOTTE, NORTH CAROLINA 28204
704·377·8800

CLARK NEXSEN LICENSE NUMBER: C-1028

WALKER CONSULTANTS
13860 Ballantyne Corporate Place
Suite 140
Charlotte, NC 28277
T: 704.247.6230
www.walkerconsultants.com
NC License No. F-0518

McKIM&CREED
CIVIL ENGINEER
243 NORTH FRONT STREET
WILMINGTON, NORTH CAROLINA
28401
910.343.1048

PROFESSIONAL SEAL
NOT FOR CONSTRUCTION
CLARK NEXSEN
CERT NO. 50680
NORTH CAROLINA

NC CORPORATE ENGINEERING LICENSE #C-1028

SUBMITTAL
04/15/2019
CONSTRUCTION DOCUMENT SUBMITTAL 01

REVISIONS

KEY PLAN

SHEET
STAIR TOWER PLANS

AE401

DESIGN: Designer
DRAWN: Author
REVIEW: Checker

CN 8112

4/15/2019 5:45:07 PM
C:\Revit Projects\8112_UNCW_Parking_Deck_II_A17_nopardy.rvt

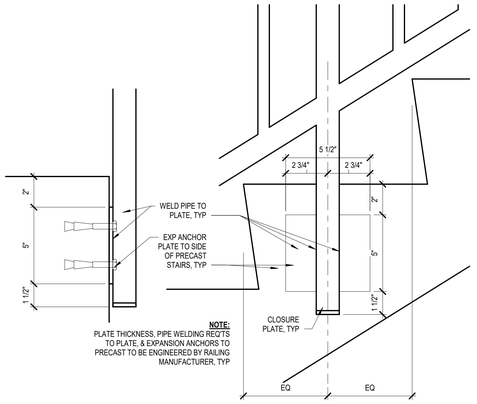

11 POST MOUNT AT STAIR
3" = 1'-0"

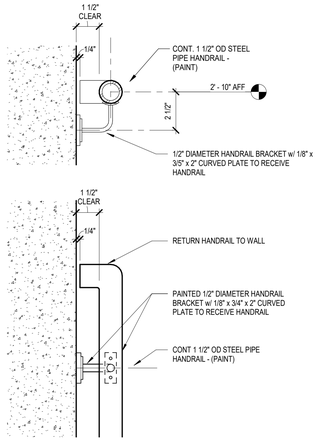

10 HANDRAIL RETURN AT PRECAST
3" = 1'-0"

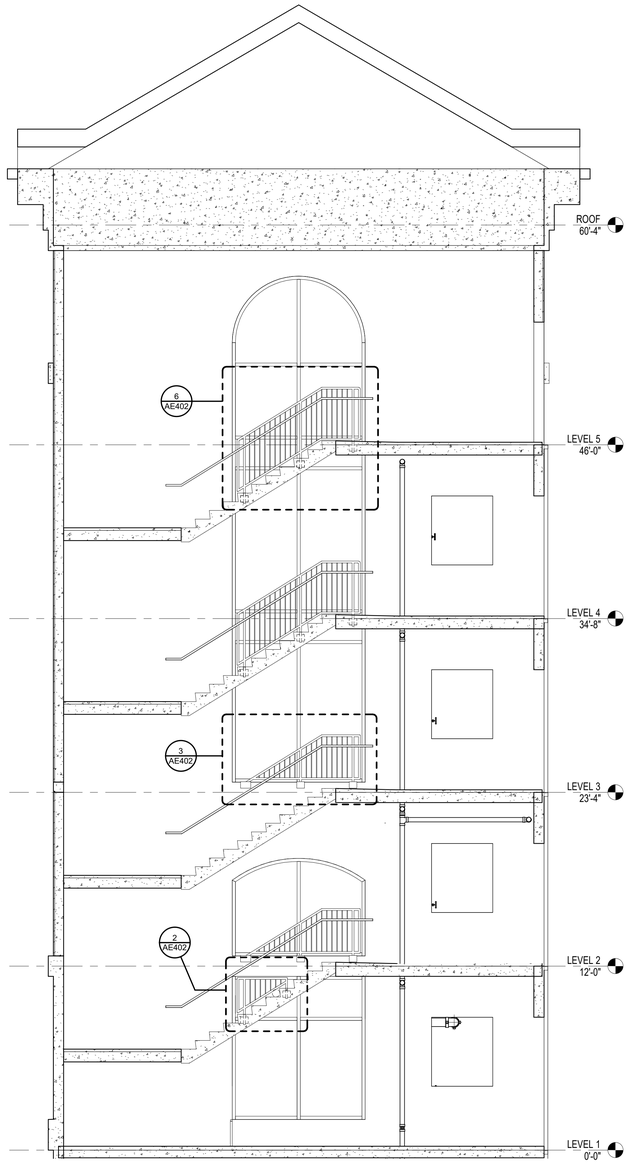

4 GUARDRAILS AT CURTAINWALL
1/4" = 1'-0"

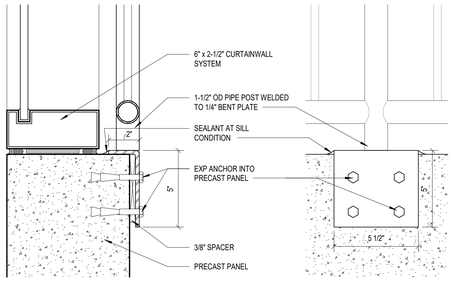

9 POST MOUNT AT PRECAST SILL
3" = 1'-0"

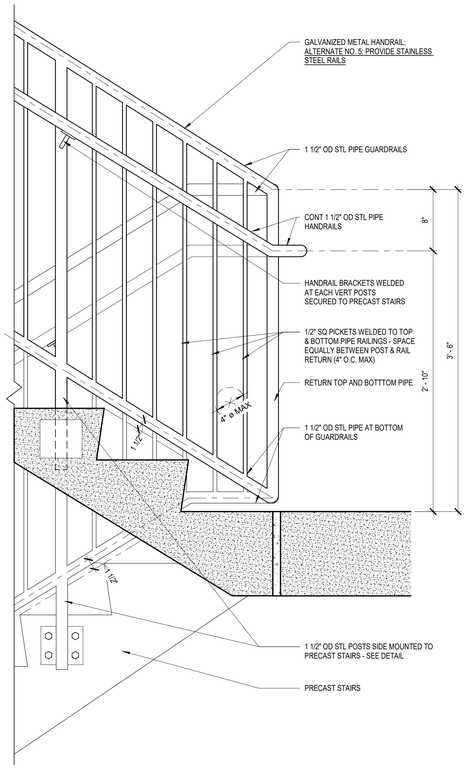

8 STAIR DETAIL AT FLOOR LANDING
1 1/2" = 1'-0"

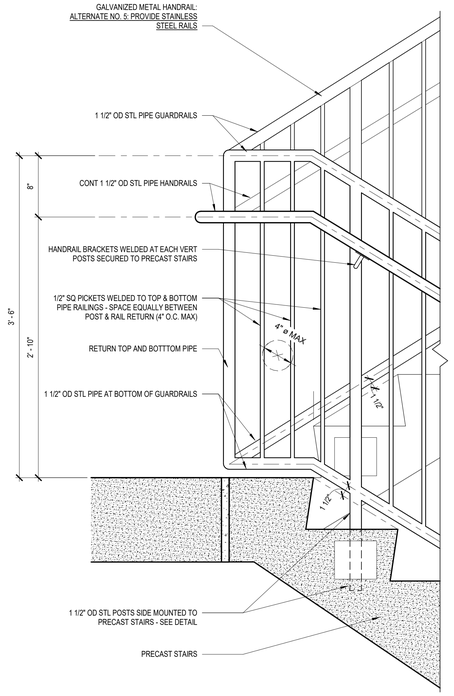

7 STAIR DETAIL AT STAIR LANDING
1 1/2" = 1'-0"

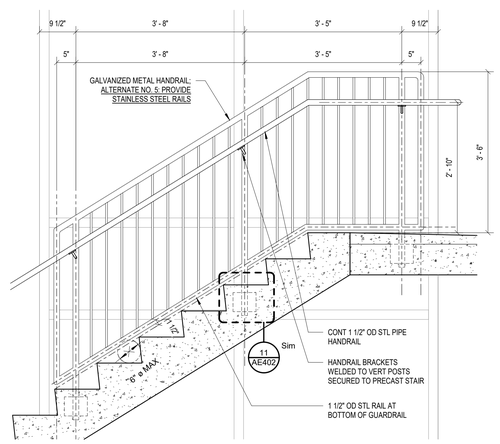

6 CURTAINWALL GUARDRAIL 1
3/4" = 1'-0"

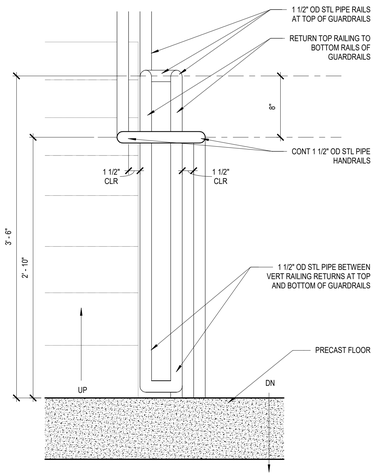

5 LANDING STAIR RAILING ELEVATION
1 1/2" = 1'-0"

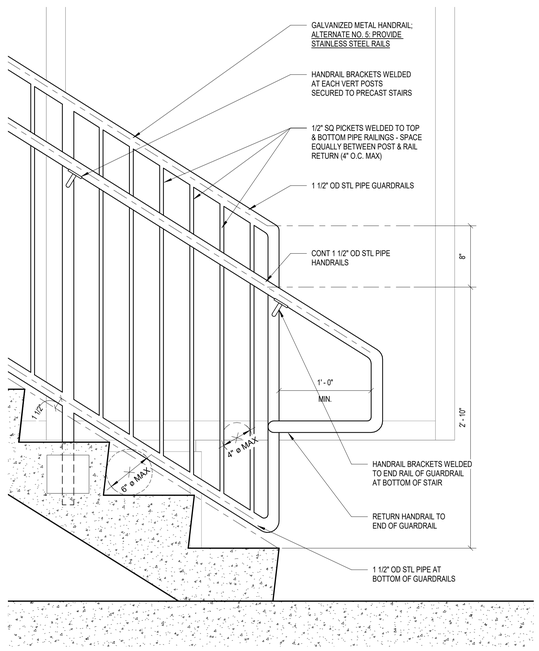

1 STAIR RAILING DETAIL AT LEVEL 1
1 1/2" = 1'-0"

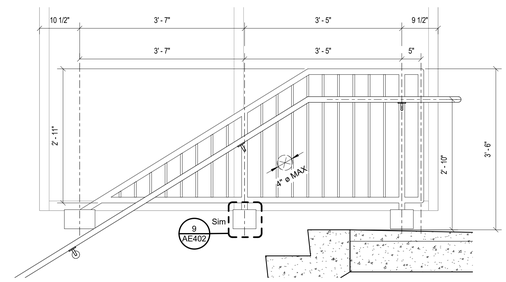

3 CURTAINWALL GUARDRAIL 2
3/4" = 1'-0"

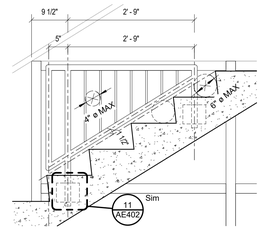

2 CURTAINWALL GUARDRAIL 3
3/4" = 1'-0"

UNCW
UNIVERSITY of NORTH CAROLINA WILMINGTON
601 S COLLEGE ROAD
WILMINGTON, NORTH CAROLINA 28403

PARKING DECK II AND SURFACE PARKING (DESIGN-BUILD)
SOUTH CAMPUS - 4965 RIEGEL ROAD

SCO ID NUMBER: 18-19226-01A
CODE: 41828
ITEM: 301

CONTRACTOR
Balfour Beatty Construction

DESIGNER

CLARKNEXSEN
1523 ELIZABETH AVENUE, SUITE 300
CHARLOTTE, NORTH CAROLINA 28204
704·377·8800
CLARK NEXSEN LICENSE NUMBER: C-1028

WALKER CONSULTANTS
13860 Ballantyne Corporate Place
Suite 140
Charlotte, NC 28277
T: 704.247.6230
www.walkerconsultants.com
NC License No. F-0518

McKIM&CREED
CIVIL ENGINEER
243 NORTH FRONT STREET
WILMINGTON, NORTH CAROLINA
28401
910.343.1048

PROFESSIONAL SEAL
NOT FOR CONSTRUCTION
CLARK NEXSEN CERT NO. 50680 NORTH CAROLINA
CARY T. RUNLONG REGISTERED ARCHITECT 7730 NORTH CAROLINA
NC CORPORATE ENGINEERING LICENSE #C-1028

SUBMITTAL
04/15/2019
CONSTRUCTION DOCUMENT SUBMITTAL 01

REVISIONS

KEY PLAN

SHEET
STAIR TOWER SECTIONS - RAILING DETAILS

AE402

DESIGN: Designer
DRAWN: Author
REVIEW: Checker

CN 8112

4/15/2019 9:45:11 PM
C:\Revit Projects\8112_UNCW_Parking_Deck_II_A17_nicpardy.rvt

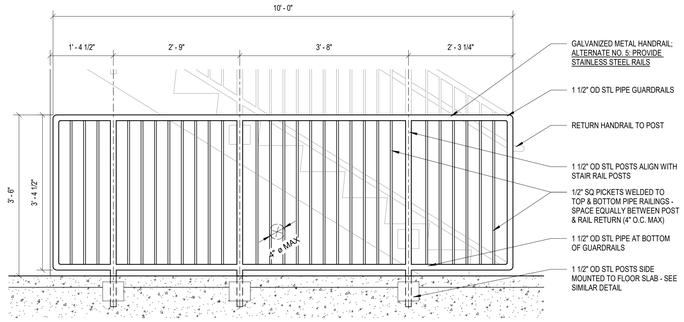

8 TYPICAL GUARDRAIL AT LANDING
3/4" = 1'-0"

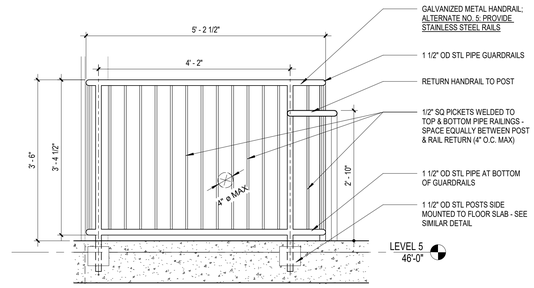

7 SHORT GUARDRAIL AT LEVEL 5
3/4" = 1'-0"

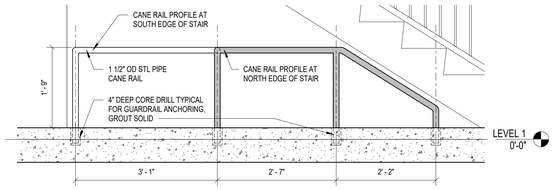

6 CANE RAIL AT STAIR
3/4" = 1'-0"

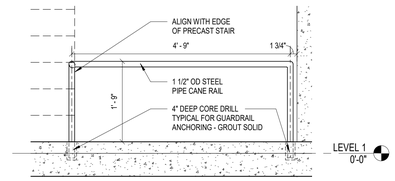

5 CANE RAIL AT PRECAST
3/4" = 1'-0"

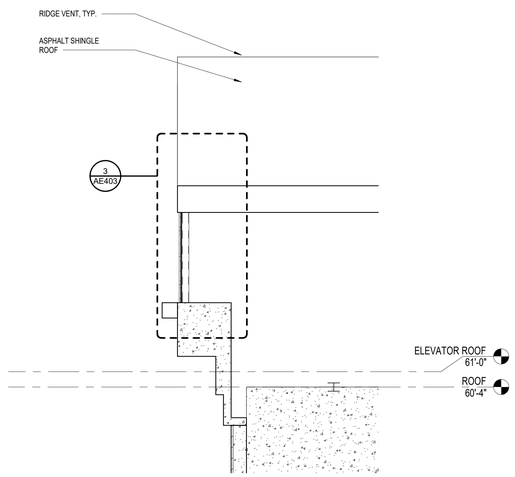

4 SECTION @ STAIR TOWER
3/8" = 1'-0" REF 1 / AE104

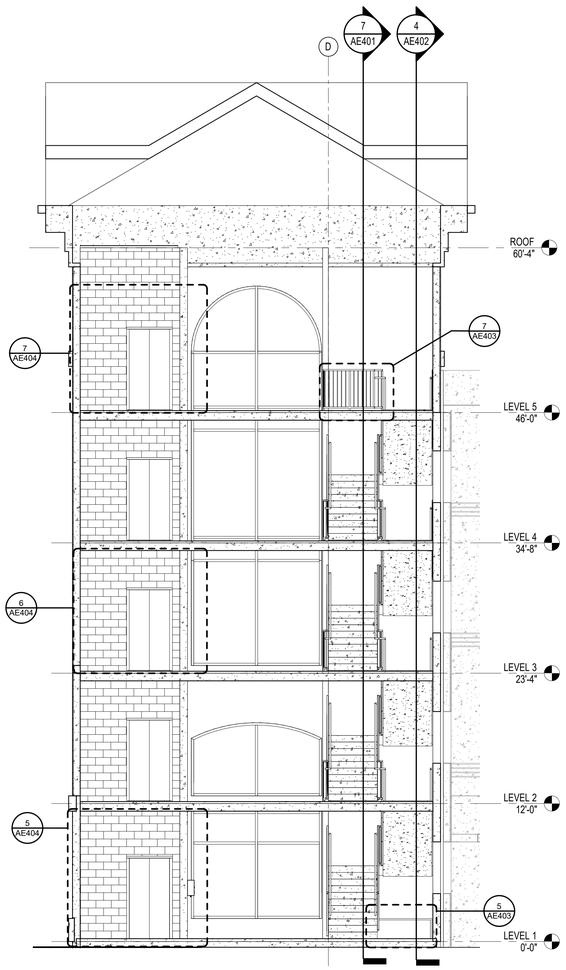

2 SECTION THROUGH STAIR TOWER 2
3/16" = 1'-0"

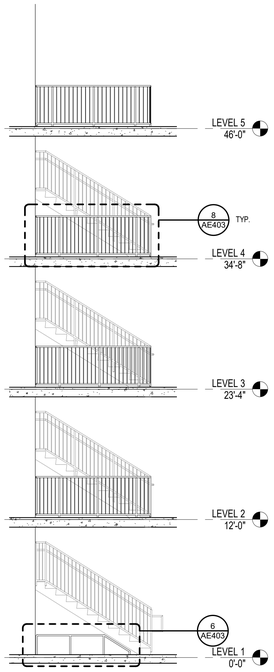

1 LANDING GUARDRAILS
3/16" = 1'-0"

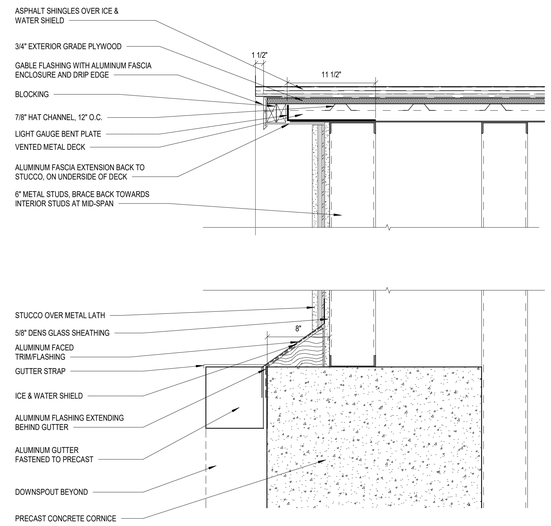

3 SECTION DETAIL @ GABLE
1 1/2" = 1'-0" REF 7 / AE401

UNCW
UNIVERSITY of NORTH CAROLINA WILMINGTON
601 S COLLEGE ROAD
WILMINGTON, NORTH CAROLINA 28403

PARKING DECK II AND SURFACE PARKING (DESIGN-BUILD)
SOUTH CAMPUS - 4965 RIEGEL ROAD

SCO ID NUMBER: 18-19226-01A
CODE: 41828
ITEM: 301

CONTRACTOR
Balfour Beatty Construction

DESIGNER
CLARKNEXSEN
1523 ELIZABETH AVENUE, SUITE 300
CHARLOTTE, NORTH CAROLINA 28204
704·377·8800

CLARK NEXSEN LICENSE NUMBER: C-1028

WALKER CONSULTANTS
13860 Ballantyne Corporate Place
Suite 140
Charlotte, NC 28277
T: 704.247.6230
www.walkerconsultants.com
NC License No. F-0518

McKIM&CREED
CIVIL ENGINEER
243 NORTH FRONT STREET
WILMINGTON, NORTH CAROLINA
28401
910.343.1048

PROFESSIONAL SEAL
NOT FOR CONSTRUCTION
CLARK NEXSEN CERT NO. 50680 NORTH CAROLINA
NC CORPORATE ENGINEERING LICENSE #C-1028

SUBMITTAL
04/15/2019
CONSTRUCTION DOCUMENT SUBMITTAL 01

REVISIONS

KEY PLAN

SHEET
STAIR TOWER DETAILS

AE403

DESIGN: Designer
DRAWN: Author
REVIEW: Checker

CN 8112

4/15/2019 5:45:16 PM
C:\Revit Projects\8112_UNCW_Parking_Deck_II_A17_mcpurdy.rvt

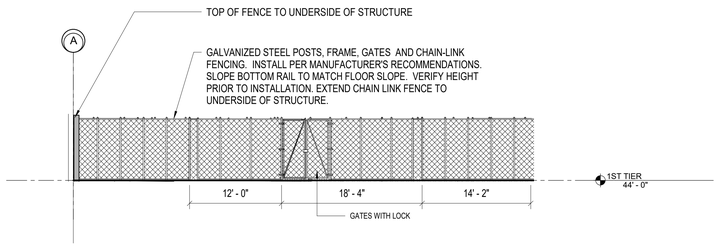

3 ELEVATION AT FENCING AND GATES
1/8" = 1'-0" REF 1 / AE101

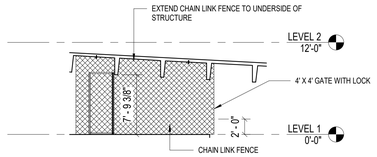

8 SECTION THROUGH STORAGE ENCLOSURE
1/8" = 1'-0" REF 1 / AE101

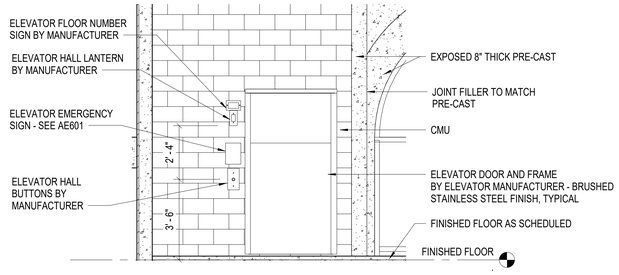

7 ELEVATION AT ELEVATOR ENTRANCE - LEVEL 5
3/8" = 1'-0" REF 2 / AE403

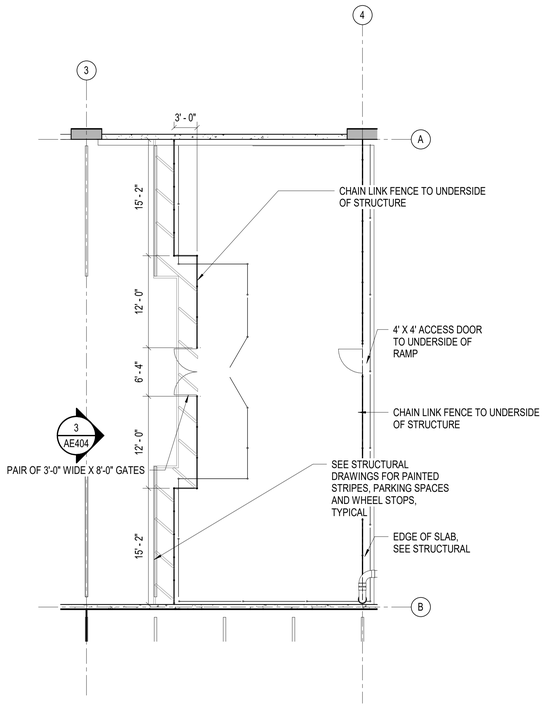

1 ENLARGED PLAN AT FENCED-IN STORAGE
1/8" = 1'-0" REF 1 / AE101

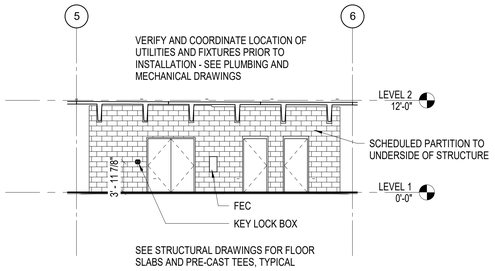

4 ELEVATION AT ELECT/TELE/SECURITY
1/8" = 1'-0" REF 1 / AE102

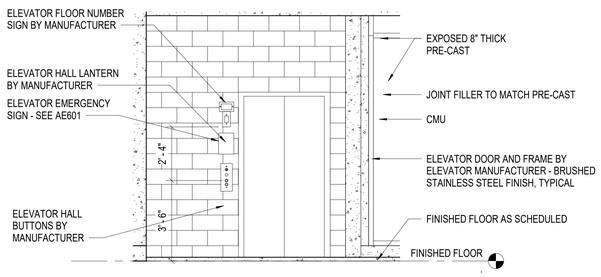

6 ELEVATION AT ELEVATOR ENTRANCE - LEVEL 2-4
3/8" = 1'-0" REF 2 / AE403

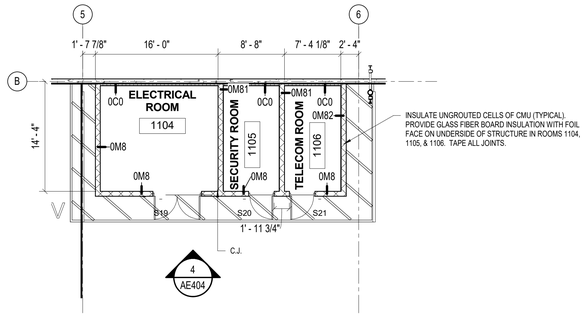

2 ENLARGED PLAN AT ELECT/TELE/SECURITY
1/8" = 1'-0" REF 1 / AE101

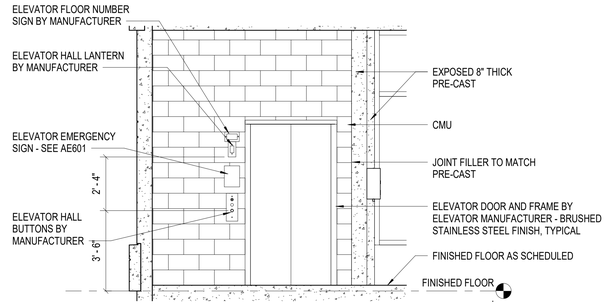

5 ELEVATION AT ELEVATOR ENTRANCE - LEVEL 1
3/8" = 1'-0" REF 2 / AE403

4/15/2019 8:45:21 PM
C:\Revit Projects\8112_UNCW_Parking_Deck_II_A17_nsparsby.rvt

UNCW
UNIVERSITY of NORTH CAROLINA WILMINGTON
601 S COLLEGE ROAD
WILMINGTON, NORTH CAROLINA 28403

PARKING DECK II AND SURFACE PARKING (DESIGN-BUILD)
SOUTH CAMPUS - 4965 RIEGEL ROAD

SCO ID NUMBER: 18-19226-01A
CODE: 41828
ITEM: 301

CONTRACTOR
Balfour Beatty Construction

DESIGNER

CLARKNEXSEN
1523 ELIZABETH AVENUE, SUITE 300
CHARLOTTE, NORTH CAROLINA 28204
704·377·8800
CLARK NEXSEN LICENSE NUMBER: C-1028

WALKER CONSULTANTS
13860 Ballantyne Corporate Place
Suite 140
Charlotte, NC 28277
T: 704.247.6230
www.walkerconsultants.com
NC License No. F-0518

McKIM&CREED
CIVIL ENGINEER
243 NORTH FRONT STREET
WILMINGTON, NORTH CAROLINA
28401
910.343.1048

PROFESSIONAL SEAL
NOT FOR CONSTRUCTION
CLARK NEXSEN CERT NO. 50680 NORTH CAROLINA
GARY T. RUNLEPOS REGISTERED ARCHITECT 7730 PARK CITY, NORTH CAROLINA
NC CORPORATE ENGINEERING LICENSE #C-1028

SUBMITTAL
04/15/2019
CONSTRUCTION DOCUMENT SUBMITTAL 01

REVISIONS

KEY PLAN

SHEET
ENLARGED PLANS AND INTERIOR ELEVATIONS

AE404

DESIGN: Designer
DRAWN: Author
REVIEW: Checker

CN 8112

FINISH SCHEDULE

ROOM NO.	ROOM NAME	WALL FINISH	WALL COLOR	FLOOR FINISH	CEILING FINISH	REMARKS
1101	LEVEL ONE PARKING	CONCRETE	UNFINISHED (SEE ALT 1B)	UNFINISHED	UNFINISHED (SEE ALT 1A)	SEE PLANS ON AE601 FOR ACCENT PAINTED WALLS (BASE BID)
1104	ELECTRICAL ROOM	SEALED CMU, PAINTED	SHERWIN-WILLIAMS SW#2429 "PALAIS WHITE"	SEALED CONCRETE	UNFINISHED	SEE PLANS ON AE601 FOR ACCENT PAINTED WALLS (BASE BID)
1105	SECURITY ROOM	SEALED CMU, PAINTED	SHERWIN-WILLIAMS SW#2429 "PALAIS WHITE"	SEALED CONCRETE	UNFINISHED	SEE PLANS ON AE601 FOR ACCENT PAINTED WALLS (BASE BID)
1106	TELECOM ROOM	SEALED CMU, PAINTED	SHERWIN-WILLIAMS SW#2429 "PALAIS WHITE"	SEALED CONCRETE	UNFINISHED	SEE PLANS ON AE601 FOR ACCENT PAINTED WALLS (BASE BID)
1107	STORAGE	--	--	MEDIUM BROOM FINISH	UNFINISHED	SEE PLANS ON AE601 FOR ACCENT PAINTED WALLS (BASE BID)
2101	LEVEL TWO PARKING	CONCRETE	UNFINISHED (SEE ALT 1B)	UNFINISHED	UNFINISHED (SEE ALT 1A)	SEE PLANS ON AE601 FOR ACCENT PAINTED WALLS (BASE BID)
3101	LEVEL THREE PARKING	CONCRETE	UNFINISHED (SEE ALT 1B)	UNFINISHED	UNFINISHED (SEE ALT 1A)	SEE PLANS ON AE601 FOR ACCENT PAINTED WALLS (BASE BID)
4101	LEVEL FOUR PARKING	CONCRETE	UNFINISHED (SEE ALT 1B)	UNFINISHED	UNFINISHED (SEE ALT 1A)	SEE PLANS ON AE601 FOR ACCENT PAINTED WALLS (BASE BID)
5101	LEVEL FIVE PARKING	CONCRETE	UNFINISHED (SEE ALT 1B)	UNFINISHED	UNFINISHED (SEE ALT 1A)	SEE PLANS ON AE601 FOR ACCENT PAINTED WALLS (BASE BID)
5102	ELEVATOR CONTROL	SEALED CMU/CONCRETE	--	SEALED CONCRETE	UNFINISHED	SEE PLANS ON AE601 FOR ACCENT PAINTED WALLS (BASE BID)
5103	ELEVATOR CONTROL	SEALED CMU/CONCRETE	--	SEALED CONCRETE	UNFINISHED	SEE PLANS ON AE601 FOR ACCENT PAINTED WALLS (BASE BID)
EV01	ELEVATOR 1	--	--	RUBBER	--	
EV02	ELEVATOR 2	--	--	RUBBER	--	
SA01	STAIR TOWER 1	TROWEL FINISHED CONCRETE, PAINTED	UNFINISHED (SEE ALT 1B)	BROOM FINISHED CONCRETE	UNFINISHED (SEE ALT 1A)	SEE PLANS ON AE601 FOR ACCENT PAINTED WALLS (BASE BID)
SA02	STAIR TOWER 1	TROWEL FINISHED CONCRETE, PAINTED	UNFINISHED (SEE ALT 1B)	BROOM FINISHED CONCRETE	UNFINISHED (SEE ALT 1A)	SEE PLANS ON AE601 FOR ACCENT PAINTED WALLS (BASE BID)
SA03	STAIR TOWER 1	TROWEL FINISHED CONCRETE, PAINTED	UNFINISHED (SEE ALT 1B)	BROOM FINISHED CONCRETE	UNFINISHED (SEE ALT 1A)	SEE PLANS ON AE601 FOR ACCENT PAINTED WALLS (BASE BID)
SA04	STAIR TOWER 1	TROWEL FINISHED CONCRETE, PAINTED	UNFINISHED (SEE ALT 1B)	BROOM FINISHED CONCRETE	UNFINISHED (SEE ALT 1A)	SEE PLANS ON AE601 FOR ACCENT PAINTED WALLS (BASE BID)
SA05	STAIR TOWER 1	TROWEL FINISHED CONCRETE, PAINTED	UNFINISHED (SEE ALT 1B)	BROOM FINISHED CONCRETE	UNFINISHED (SEE ALT 1A)	SEE PLANS ON AE601 FOR ACCENT PAINTED WALLS (BASE BID)
SB01	STAIR TOWER 2	TROWEL FINISHED CONCRETE, PAINTED	UNFINISHED (SEE ALT 1B)	BROOM FINISHED CONCRETE	UNFINISHED (SEE ALT 1A)	SEE PLANS ON AE601 FOR ACCENT PAINTED WALLS (BASE BID)
SB02	STAIR TOWER 2	TROWEL FINISHED CONCRETE, PAINTED	UNFINISHED (SEE ALT 1B)	BROOM FINISHED CONCRETE	UNFINISHED (SEE ALT 1A)	SEE PLANS ON AE601 FOR ACCENT PAINTED WALLS (BASE BID)
SB03	STAIR TOWER 2	TROWEL FINISHED CONCRETE, PAINTED	UNFINISHED (SEE ALT 1B)	BROOM FINISHED CONCRETE	UNFINISHED (SEE ALT 1A)	SEE PLANS ON AE601 FOR ACCENT PAINTED WALLS (BASE BID)
SB04	STAIR TOWER 2	TROWEL FINISHED CONCRETE, PAINTED	UNFINISHED (SEE ALT 1B)	BROOM FINISHED CONCRETE	UNFINISHED (SEE ALT 1A)	SEE PLANS ON AE601 FOR ACCENT PAINTED WALLS (BASE BID)
SB05	STAIR TOWER 2	TROWEL FINISHED CONCRETE, PAINTED	UNFINISHED (SEE ALT 1B)	BROOM FINISHED CONCRETE	UNFINISHED (SEE ALT 1A)	SEE PLANS ON AE601 FOR ACCENT PAINTED WALLS (BASE BID)

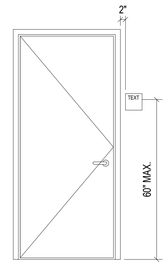

SIGN MOUNTING

RAISED CHARACTERS SHALL BE 48" MINIMUM ABOVE THE FLOOR, MEASURED TO THE BASELINE OF THE LOWEST RAISED CHARACTER AND 60" MAXIMUM ABOVE THE FLOOR, MEASURED TO THE BASELINE OF THE HIGHEST RAISED CHARACTER.

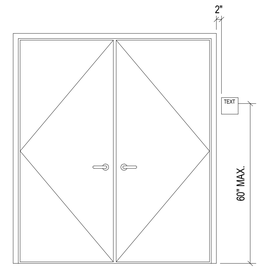

SIGN MOUNTING

ALL BUILDING SIGNAGE IN 754 ARCHITECTURAL (PRISMATIC FACE): 15" LETTER HEIGHT, 2-3/16" FACE WIDTH, 3/4" LETTER DEPTH

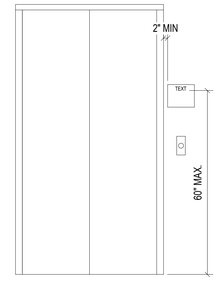

SIGN MOUNTING

NOTE: PROVIDE ELEVATOR EMERGENCY SIGN CENTERED ABOVE CALL BUTTON ON EACH FLOOR.

ALL SIGNAGE LETTERS AND IMAGES TO BE BRONZE ON A WHITE BACKGROUND

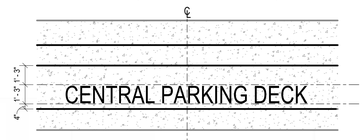

BUILDING SIGNAGE LAYOUT
1/4" = 1'-0"

CAST REVERSE CHANNEL LETTERS

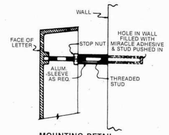

MOUNTING DETAIL
PM — TYPE K

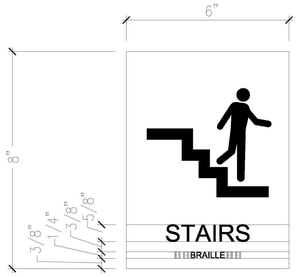

STAIR SIGNAGE

J

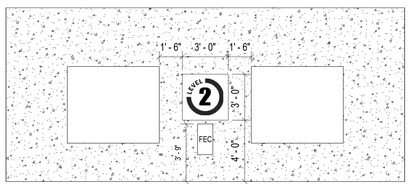

2 SHEAR WALL LOCATIONS
1/4" = 1'-0"

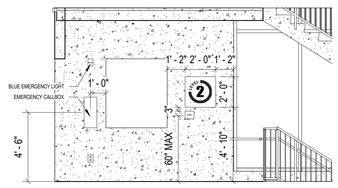

3 INTERIOR STAIR LOCATIONS
1/4" = 1'-0"

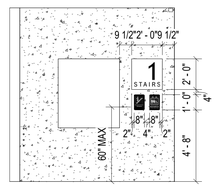

4 EXTERIOR STAIR LOCATIONS
1/4" = 1'-0"

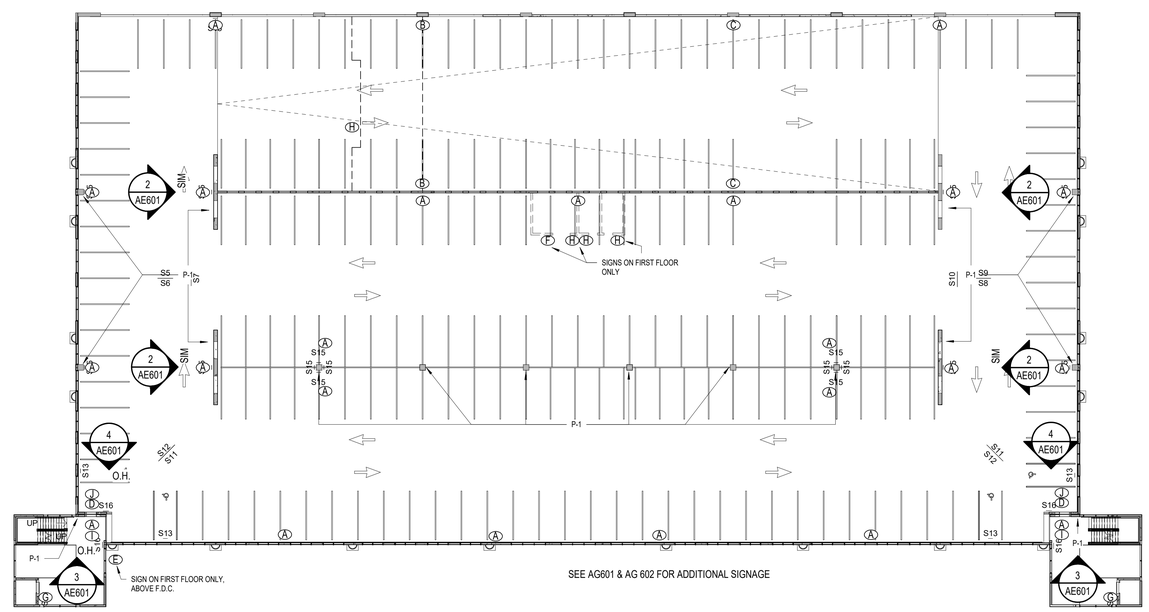

1 SIGNAGE LOCATION PLAN, TYP.
3/64" = 1'-0"

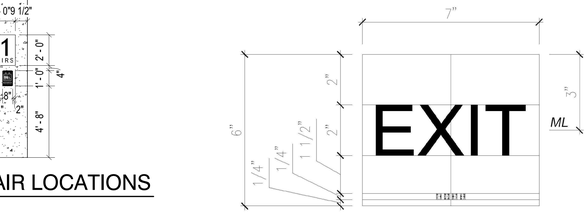

TYPE 5

I

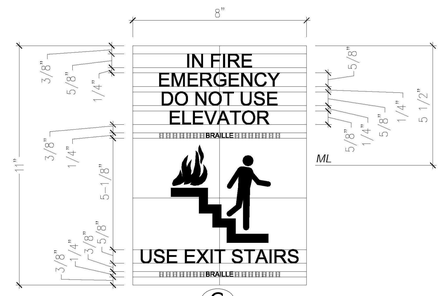

G

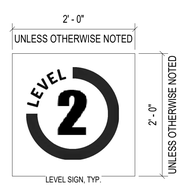

A

5 WAYFINDING/SIGNAGE
1" = 1'-0"

STAIR TOWER SIGN, TYP.

D

SIGN SHALL HAVE EITHER WHITE TEXT ON A RED BACKGROUND OR RED TEXT ON A WHITE BACKGROUND. ALL LETTERS ARE 6" MIN. WITH A 1" MIN. STROKE. SIGNS ARE REQUIRED TO BE ON A RETRO-REFLECTIVE MATERIAL WITH RETRO-REFLECTIVE LETTERS.

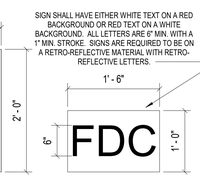

FIRE DEPARTMENT CONTROL SIGN

E

SIGN SHALL HAVE EITHER WHITE GRAPHICS AND TEXT ON RED A BACKGROUND OR RED GRAPHICS AND TEXT ON A WHITE BACKGROUND.

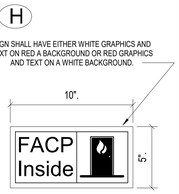

FIRE ALARM CONTROL PANEL SIGN

F

1.05 Submittals

A. The contractor shall submit a sample of each type of sign in the specified color and size and a sample of the Grip-Strip showing its attachment to the appropriate sign type.

B. Prior to the installation, the contractor shall supply in duplicate the signage finish schedule and shop drawings showing the colors, words, numbering and other information to be included on the signage as it is to be installed.

1.06 Installation

A. The contractor is to install the signage in accordance with the drawings, these specifications, approved shop drawings and in accordance with manufacturer's printed instructions. Include all accessories to provide a proper installation. Work is to be level, plumb and in true plane. Work is to be secure and rigid. Installation accessories shall be furnished by the signage manufacturer. Do not use installation materials from any other source. Signs adhered to glass shall have a blank plate attached to the back of the glass so that the attaching tape or other method is not visible. The color of the blank plate is to match the sign color. The size of the blank plate is to match the size of the sign.

B. The contractor shall supply and install all the graphic inserts (pre-cut and printed) for the Type 1 and Type 2 signs. The inserts are to be on paper.

C. Attachment: Per manufacturer recommendation, must be easily removable without damage.

D. Signs are to be mounted so that they are ADA compliant.

E. The Grip-Strip Sign is to be mounted to the plastic sign and not directly to the wall. ~~Guarantee~~

F. Any signs that do no remain securely bonded to the substrate for a period of 1 year after acceptance of the project are to be removed and properly reinstalled at no additional cost to the owner.

1.07 Manufacturers

A. List of UNCW pre-approved manufacturers:

1. Best Sign System
2. Corum Signs
3. ASI Sign System
4. Signature Signs, Inc.
5. 290 Sign System

1.08 Sign Type Usage Schedule

Type 1	Type 1	Type 3	Type 4 A, B&C	Type 5
Office Conference Rms Classrooms	Photocopy Rms Reception File Room	Housekeeping Mechanical Hazardous Waste Electrical Telecom/Data	Restrooms	Direction Department Signs Information Signs Directories

Note: Type 2 has been omitted.

Part 2: Exterior Signage

2.01 General

A. All new building projects and major building renovations require exterior signage. Number of exterior signs and location of sign to be determined during final design stage.

2.02 Design Guidelines

A. All exterior signage shall comply with the UNCW Exterior Signage Standard.

B. Color of signs to be: When applied to brick the lettering is white, if applied to white fascia, the lettering is bronze finish.

C. Standard Size:

1. Letters of sign to be ¼" depth, 8" or as directed by PM tall using architectural style – "Prismatic" as manufactured by BFG Industries, Inc. (see Appendix S2)
2. Other Letter Sizes:
   a. Letter height will be determined by defined wall space available for the text. See Appendix S2 for average letter width as a space guide.
   b. Letter distance readability can be determined by chart. (see Appendix S2)

2.03 Quality Assurance

A. Manufacturer to have a minimum of 20 years experience in manufacturing letters.

B. All letters must be manufactured by one manufacturer and must match existing cast aluminum letters at UNCW facilities - i.e. BFG No. 754 Architectural (prismatic face) letter style. (see Appendix S2)

C. A qualified sign installer should install letters.

2.04 Products

A. Basis of Design: Provide exterior signs by BFG Industries, Inc., 1057 Colite Drive, West Columbia, SC 19170 or approved equal based upon specification compliance.

2.05 Materials

A. Aluminum ingot for cast aluminum letters - No. 443.1 alloy.

B. Aluminum extrusion for aluminum sleeve spacers - 6061 or 6063 alloy.

C. Aluminum all-thread studs for installation hardware for letters up to 16" in height.

D. Stainless steel all-thread studs for installation hardware for letters> 18" in height.

2.06 Finishes

A. Natural Satin faces, file finished edges, 2-part hardened acrylic polyurethane clear coat.

B. Aliphatic polyurethane enamel equal to DuPont IMRON 3.5 HG paint.

2.07 Mounting Hardware

A. Cast aluminum letters have threaded stud bosses for installation stud insertion.

B. Letters up to 10" letter height receive 3/16" diameter aluminum studs.

C. Letters from 12" letter height up to 16" letter height receive 1/4" diameter aluminum studs.

D. Letters greater than 18" letter height receive 1/4" diameter stainless steel studs.

E. All letters utilize a STOP NUT and an extruded ALUMINUM SLEEVE SPACER.

F. Installation to be performed per MOUNTING DETAIL PM-TYPE K (see Appendix S2).

G. Pre-spaced installation paper template required for each set of letters provided.

H. Epoxy adhesive required; F-26 Heavy Adhesive by Leech Products, Inc.

2.08 Warranty

A. Letters are to be guaranteed for the life of the intended use against defects in manufacturing.

B. Letter finish should be guaranteed for 5 years from excessive fading of cracking, peeling, and delamination of the paint.

NOTE: SEE CAMPUS STANDARDS FOR SUBMITTALS AND OTHER OWNER REQUIREMENTS. INFORMATION SHOWN ON THIS SHEET IS NOT CONSIDERED TO BE FINAL, AND GC MUST WORK WITH OWNER AND CONTRACTOR ON ALL SIGNAGE AND GRAPHICS.

SIGNAGE - CAMPUS SPECIFICATIONS

ALL SIGNAGE TO COMPLY WITH ICC A117.1

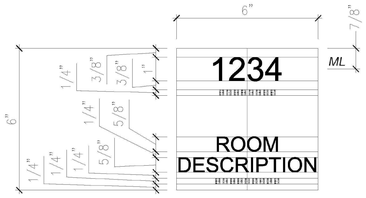

H

UNCW
UNIVERSITY of NORTH CAROLINA WILMINGTON
601 S COLLEGE ROAD
WILMINGTON, NORTH CAROLINA 28403

PARKING DECK II AND SURFACE PARKING (DESIGN-BUILD)
SOUTH CAMPUS - 4965 RIEGEL ROAD

SCO ID NUMBER: 18-19226-01A
CODE: 41828
ITEM: 301

CONTRACTOR
Balfour Beatty Construction

DESIGNER

CLARKNEXSEN
1523 ELIZABETH AVENUE, SUITE 300
CHARLOTTE, NORTH CAROLINA 28204
704·377·8800

CLARK NEXSEN LICENSE NUMBER: C-1028

WALKER CONSULTANTS
13860 Ballantyne Corporate Place
Suite 140
Charlotte, NC 28277
T: 704.247.6230
www.walkerconsultants.com
NC License No. F-0518

McKIM&CREED
CIVIL ENGINEER
243 NORTH FRONT STREET
WILMINGTON, NORTH CAROLINA
28401
910.343.1048

PROFESSIONAL SEAL

NOT FOR CONSTRUCTION
CLARK NEXSEN
CERT NO. 50680
NORTH CAROLINA

NC CORPORATE ENGINEERING LICENSE #C-1028

SUBMITTAL
04/15/2019
CONSTRUCTION DOCUMENT SUBMITTAL 01

REVISIONS

KEY PLAN

SHEET
FINISH SCHEDULES AND WAYFINDING SIGNAGE

AE601

DESIGN: Designer
DRAWN: Author
REVIEW: Checker

CN 8112

4/15/2019 5:43:27 PM
C:\Revit Projects\8112_UNCW_Parking_Deck_II_A17_rcpurdy.rvt

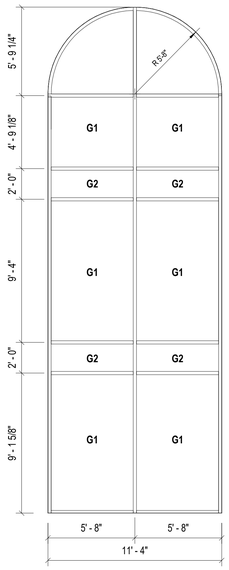

1

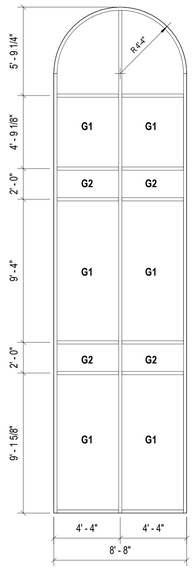

2

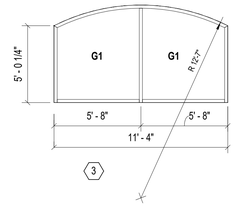

3

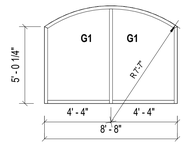

4

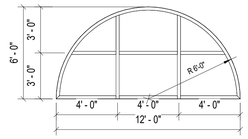

5 ALTERNATE NO. 2

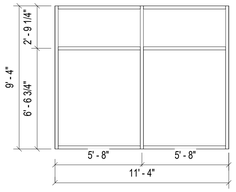

6

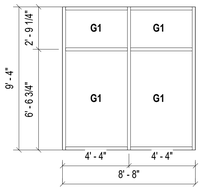

7

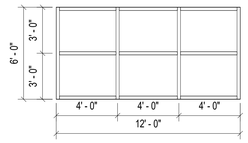

8 ALTERNATE NO. 2

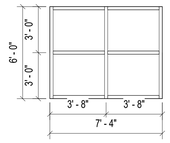

9 ALTERNATE NO. 2

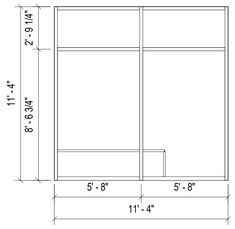

10

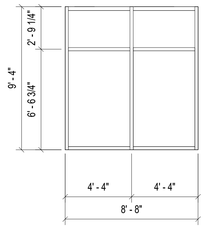

11

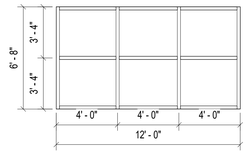

12 ALTERNATE NO. 2

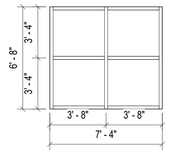

13 ALTERNATE NO. 2

GLAZING SCHEDULE

G1	1/2" TEMPERED GLASS, CLEAR
G2	1/2" TEMPERED GLASS, SPANDREL
CURTAINWALL DESIGN BASED ON 2-1/2" X 6" SYSTEM	

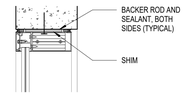

H1
1 1/2" = 1'-0"

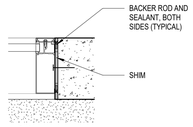

J1
1 1/2" = 1'-0"

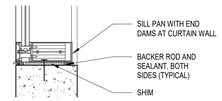

S1
1 1/2" = 1'-0"

GENERAL CURTAINWALL NOTES:

1. CONTRACTOR IS TO VISIT THE SITE AND VERIFY ALL OPENING PRIOR TO FABRICATION
2. ALL CURTAINWALL IS TO BE INSTALLED USING THE MANUFACTURERS SILL PAN ASSEMBLY. INSTALLER TO PROVIDE SILL FLASHING WITH PREFORMED END DAMS SET IN CONTINUOUS BED OF SEALANT.

UNCW
UNIVERSITY of NORTH CAROLINA WILMINGTON
601 S COLLEGE ROAD
WILMINGTON, NORTH CAROLINA 28403

PARKING DECK II AND SURFACE PARKING (DESIGN-BUILD)
SOUTH CAMPUS - 4965 RIEGEL ROAD

SCO ID NUMBER: 18-19226-01A
CODE: 41828
ITEM: 301

CONTRACTOR
Balfour Beatty Construction

DESIGNER
CLARKNEXSEN
1523 ELIZABETH AVENUE, SUITE 300
CHARLOTTE, NORTH CAROLINA 28204
704·377·8800
CLARK NEXSEN LICENSE NUMBER: C-1028

WALKER CONSULTANTS
13860 Ballantyne Corporate Place
Suite 140
Charlotte, NC 28277
T: 704.247.6230
www.walkerconsultants.com
NC License No. F-0518

McKIM&CREED
CIVIL ENGINEER
243 NORTH FRONT STREET
WILMINGTON, NORTH CAROLINA
28401
910.343.1048

PROFESSIONAL SEAL

CLARK NEXSEN CERT NO. 50680 NORTH CAROLINA
NOT FOR CONSTRUCTION

NC CORPORATE ENGINEERING LICENSE #C-1028

SUBMITTAL
04/15/2019
CONSTRUCTION DOCUMENT SUBMITTAL 01

REVISIONS

KEY PLAN

SHEET
WINDOW SCHEDULE AND DETAILS

AE602

DESIGN: Designer
DRAWN: Author
REVIEW: Checker

CN 8112

4/15/2019 5:45:32 PM
C:\Revit Projects\8112_UNCW_Parking_Deck_II_A17_mcpurdy.rvt

PRECAST PANEL LEGEND

C-1 - EXPOSED PRECAST CONCRETE WITH COLORED ADMIXTURE, SANDBLAST FINISH

C-2 - EXPOSED PRECAST, STANDARD GRAY COLOR

BR-1 - PRECAST MASONRY VENEER, RUNNING BOND (SEE SPEC SECTION FOR COLOR)

GENERAL NOTE:

1. COLOR ADMIXTURE TO BE SELECTED BY ARCHITECT FROM MANUFACTURER'S FULL RANGE OF COLORS
2. NON-FORM SIDE OF INTERIOR AND EXTERIOR PRECAST STRUCTURAL CONCRETE PANELS ARE TO BE TROWEL FINISHED U.O.N.
3. SEE 'PRECAST PANEL DETAILS' SHEET FOR CORNICE PROFILE (CP - #) AND SWEEP PROFILE (SP - #) INFORMATION
4. ALL BRICK MASONRY IS TO BE PLACED IN A RUNNING BOND PATTERN.
5. SEE SHEET G001 FOR EXTERIOR BUILDING FINISHES

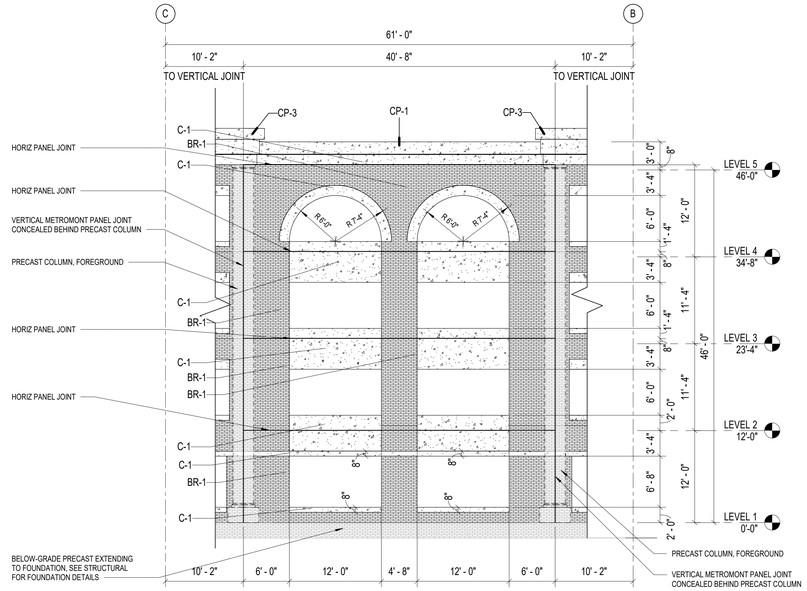

5 PRECAST ELEVATION - EAST
1/8" = 1'-0" REF 1 / AE701

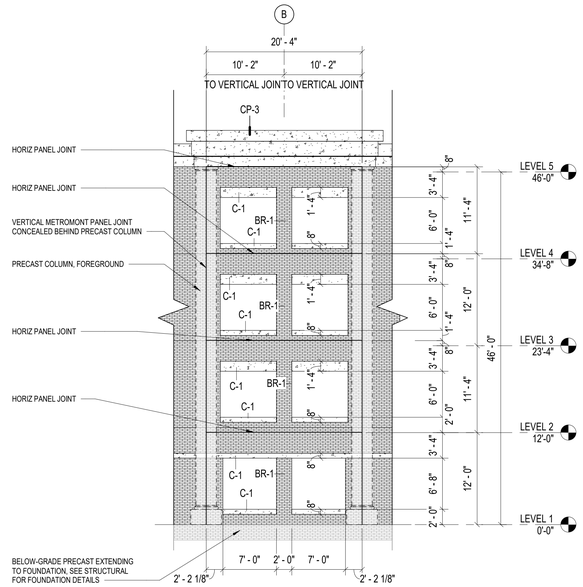

4 PRECAST ELEVATION - EAST
1/8" = 1'-0" REF 1 / AE701

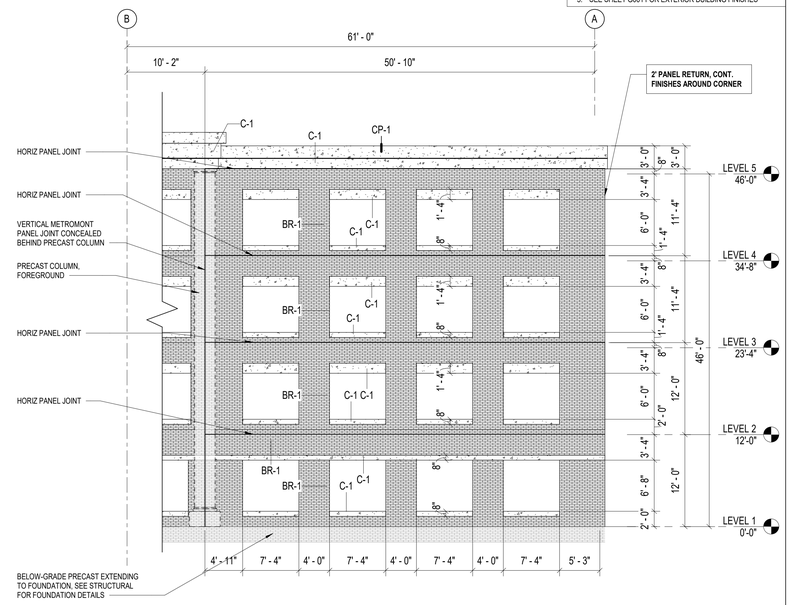

8 PRECAST ELEVATION - EAST
1/8" = 1'-0" REF 1 / AE701

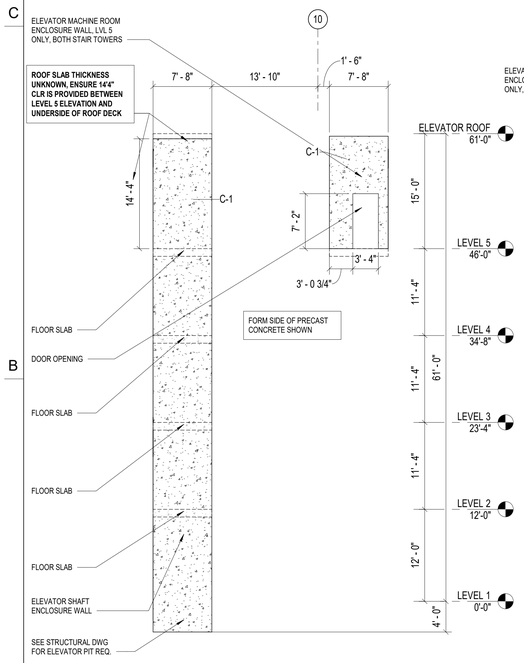

2 PRECAST ELEVATION - INTERIOR
1/8" = 1'-0" REF 1 / AE701

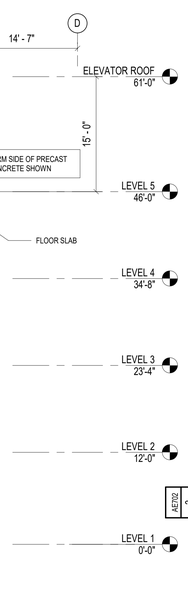

6 PRECAST ELEVATION - ELEVATOR MR
1/8" = 1'-0" REF 1 / AE701

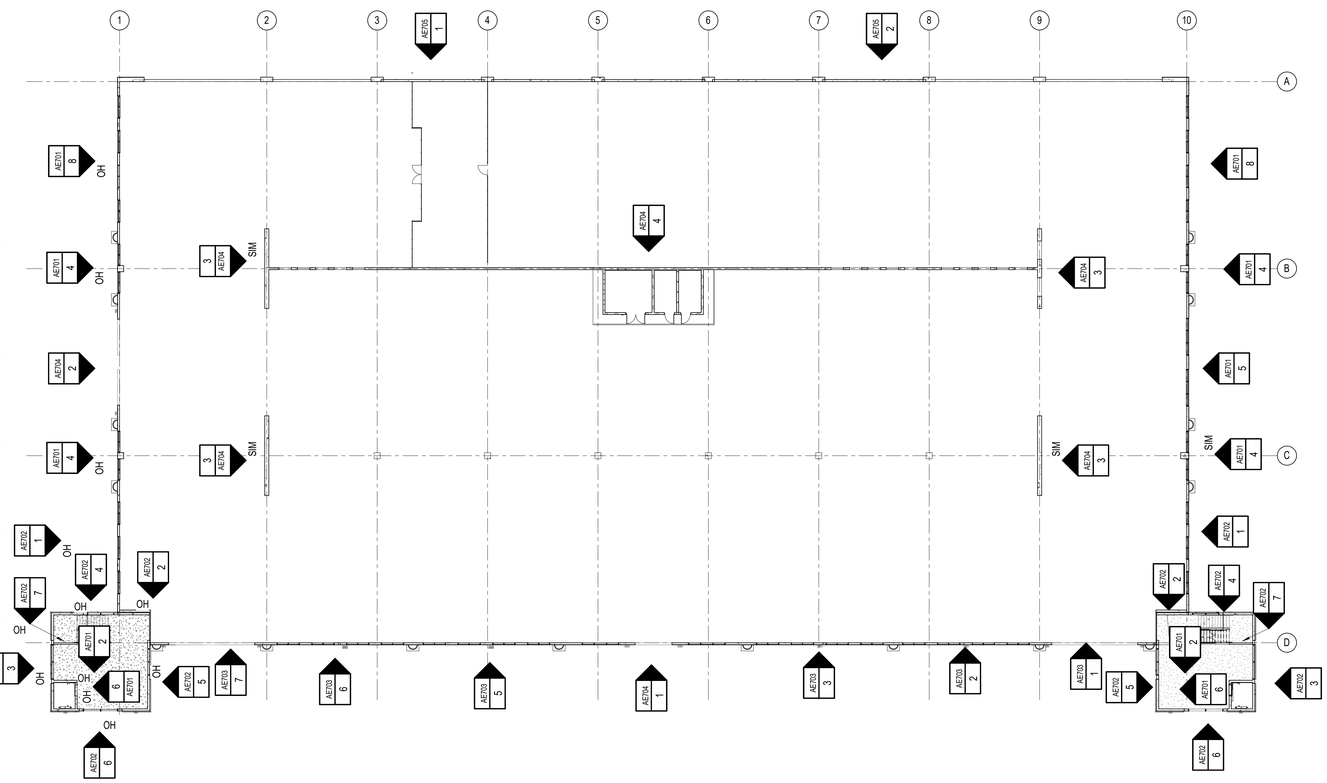

1 LEVEL ONE FLOOR PLAN Copy 1
1" = 20'-0"

UNCW
UNIVERSITY of NORTH CAROLINA WILMINGTON
601 S COLLEGE ROAD
WILMINGTON, NORTH CAROLINA 28403

PARKING DECK II AND SURFACE PARKING (DESIGN-BUILD)
SOUTH CAMPUS - 4965 RIEGEL ROAD

SCO ID NUMBER: 18-19226-01A
CODE: 41828
ITEM: 301

CONTRACTOR
Balfour Beatty Construction

DESIGNER

CLARKNEXSEN
1523 ELIZABETH AVENUE, SUITE 300
CHARLOTTE, NORTH CAROLINA 28204
704·377·8800
CLARK NEXSEN LICENSE NUMBER: C-1028

WALKER CONSULTANTS
13860 Ballantyne Corporate Place
Suite 140
Charlotte, NC 28277
T: 704.247.6230
www.walkerconsultants.com
NC License No. F-0518

McKIM&CREED
CIVIL ENGINEER
243 NORTH FRONT STREET
WILMINGTON, NORTH CAROLINA
28401
910.343.1048

PROFESSIONAL SEAL

NOT FOR CONSTRUCTION
CLARK NEXSEN CERT NO. 50680 NORTH CAROLINA

NC CORPORATE ENGINEERING LICENSE #C-1028

SUBMITTAL
04/15/2019
CONSTRUCTION DOCUMENT SUBMITTAL 01

REVISIONS

KEY PLAN

SHEET
PRECAST PANEL ELEVATIONS

AE701

DESIGN: Designer
DRAWN: Author
REVIEW: Checker

CN 8112

4/15/2019 5:45:39 PM
C:\Revit Projects\8172_UNCW_Parking_Deck_II_A17_mcpurdy.rvt

PRECAST PANEL LEGEND

C-1 - EXPOSED PRECAST CONCRETE WITH COLORED ADMIXTURE, SANDBLAST FINISH

C-2 - EXPOSED PRECAST, STANDARD GRAY COLOR

BR-1 - PRECAST MASONRY VENEER, RUNNING BOND (SEE SPEC SECTION FOR COLOR)

GENERAL NOTE:

1. COLOR ADMIXTURE TO BE SELECTED BY ARCHITECT FROM MANUFACTURER'S FULL RANGE OF COLORS
2. NON-FORM SIDE OF INTERIOR AND EXTERIOR PRECAST STRUCTURAL CONCRETE PANELS ARE TO BE TROWEL FINISHED U.O.N.
3. SEE 'PRECAST PANEL DETAILS' SHEET FOR CORNICE PROFILE (CP - #) AND SWEEP PROFILE (SP - #) INFORMATION
4. ALL BRICK MASONRY IS TO BE PLACED IN A RUNNING BOND PATTERN.
5. SEE SHEET G001 FOR EXTERIOR BUILDING FINISHES

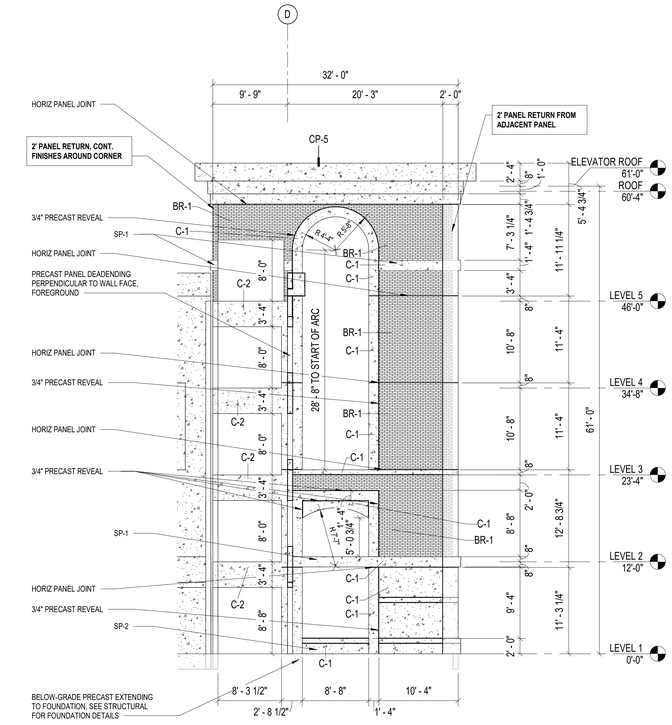

5 PRECAST ELEVATION - EAST STAIR TOWER - WEST
1/8" = 1'-0" REF 1 / AE701

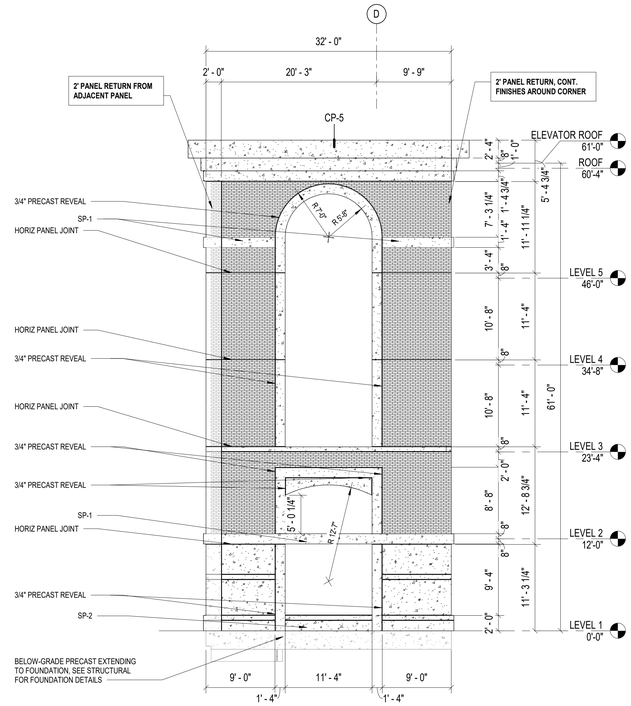

3 PRECAST ELEVATION - EAST STAIR TOWER - EAST
1/8" = 1'-0" REF 1 / AE701

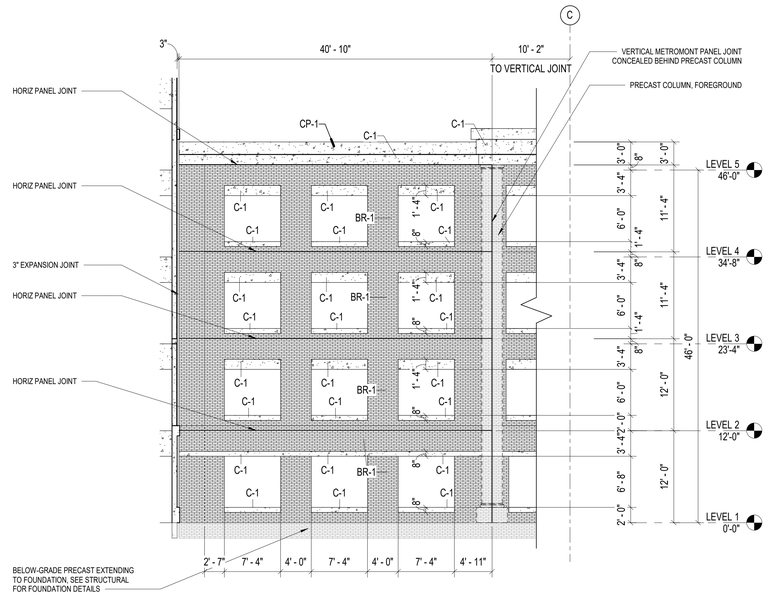

1 PRECAST ELEVATION - EAST
1/8" = 1'-0" REF 1 / AE701

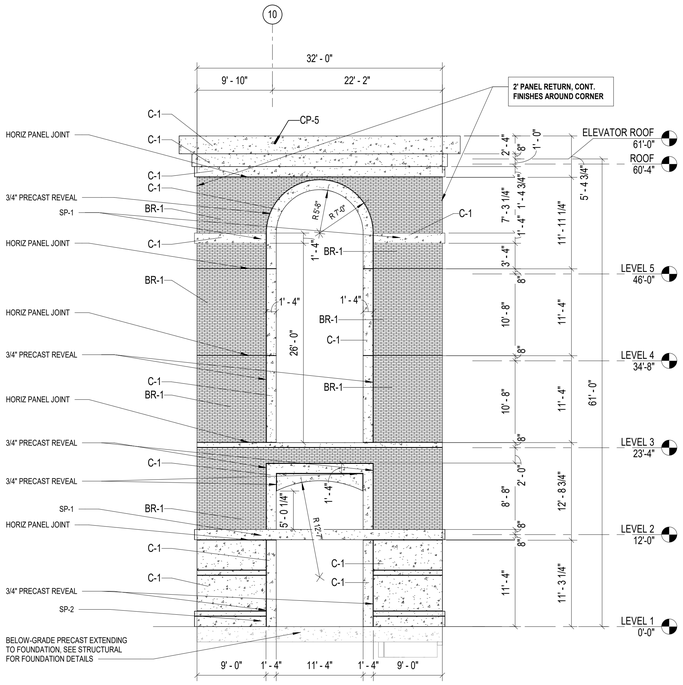

6 PRECAST ELEVATION - EAST STAIR TOWER - SOUTH
1/8" = 1'-0" REF 1 / AE701

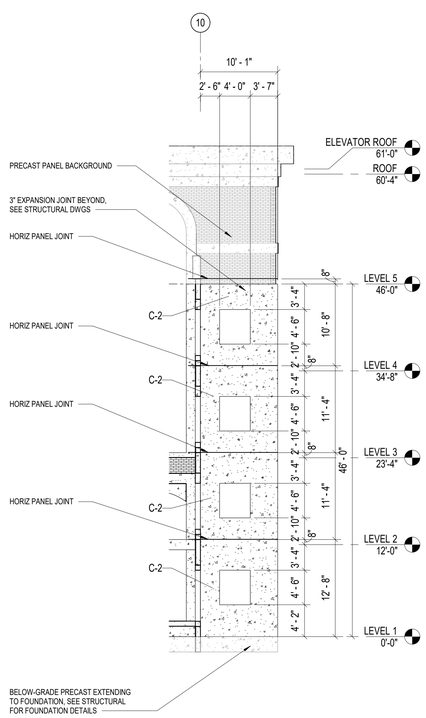

2 PRECAST ELEVATION - ST - NORTH 2
1/8" = 1'-0" REF 1 / AE701

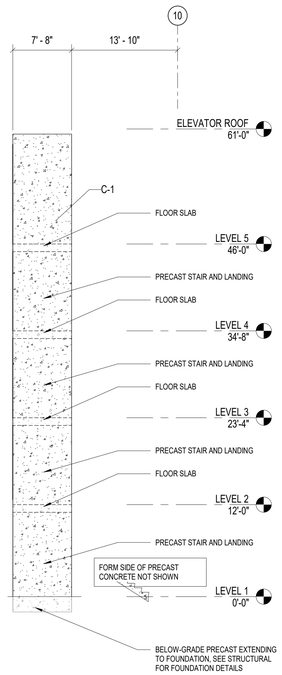

7 PRECAST ELEVATION - 6" WALL
1/8" = 1'-0" REF 1 / AE701

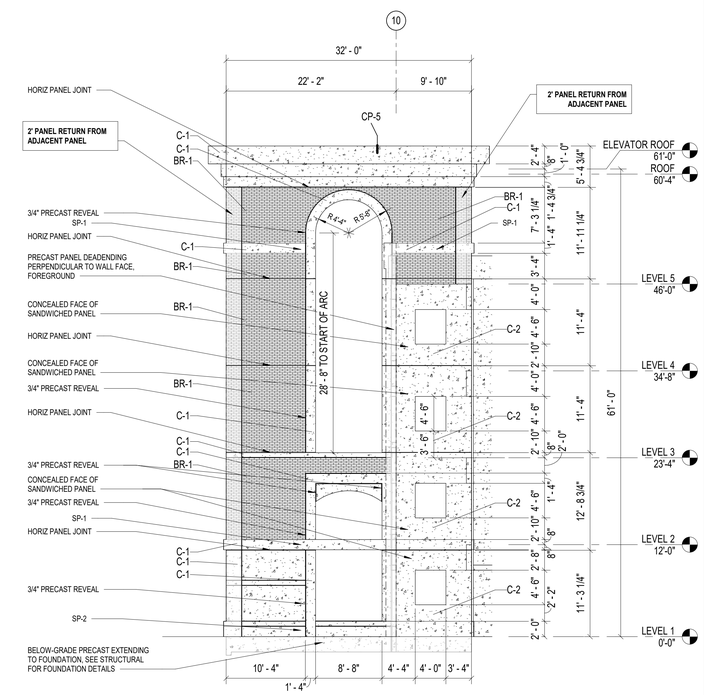

4 PRECAST ELEVATION - EAST STAIR TOWER - NORTH
1/8" = 1'-0" REF 1 / AE701

UNCW
UNIVERSITY of NORTH CAROLINA WILMINGTON
601 S COLLEGE ROAD
WILMINGTON, NORTH CAROLINA 28403

PARKING DECK II AND SURFACE PARKING (DESIGN-BUILD)
SOUTH CAMPUS - 4965 RIEGEL ROAD

SCO ID NUMBER: 18-19226-01A
CODE: 41828
ITEM: 301

CONTRACTOR
Balfour Beatty Construction

DESIGNER

CLARKNEXSEN
1523 ELIZABETH AVENUE, SUITE 300
CHARLOTTE, NORTH CAROLINA 28204
704·377·8800
CLARK NEXSEN LICENSE NUMBER: C-1028

WALKER CONSULTANTS
13860 Ballantyne Corporate Place
Suite 140
Charlotte, NC 28277
T: 704.247.6230
www.walkerconsultants.com
NC License No. F-0518

McKIM&CREED
CIVIL ENGINEER
243 NORTH FRONT STREET
WILMINGTON, NORTH CAROLINA
28401
910.343.1048

PROFESSIONAL SEAL
NOT FOR CONSTRUCTION
CLARK NEXSEN CERT NO. 50680 NORTH CAROLINA
NC CORPORATE ENGINEERING LICENSE #C-1028

SUBMITTAL
04/15/2019
CONSTRUCTION DOCUMENT SUBMITTAL 01

REVISIONS

KEY PLAN

SHEET
PRECAST PANEL ELEVATIONS

AE702

DESIGN: Designer
DRAWN: Author
REVIEW: Checker

CN 8112

4/15/2019 5:45:43 PM
C:\Revit Projects\8112_UNCW_Parking_Deck_II_A17_ncpardy.rvt

PRECAST PANEL LEGEND

C-1 - EXPOSED PRECAST CONCRETE WITH COLORED ADMIXTURE, SANDBLAST FINISH

C-2 - EXPOSED PRECAST, STANDARD GRAY COLOR

BR-1 - PRECAST MASONRY VENEER, RUNNING BOND (SEE SPEC SECTION FOR COLOR)

GENERAL NOTE:

1. COLOR ADMIXTURE TO BE SELECTED BY ARCHITECT FROM MANUFACTURER'S FULL RANGE OF COLORS
2. NON-FORM SIDE OF INTERIOR AND EXTERIOR PRECAST STRUCTURAL CONCRETE PANELS ARE TO BE TROWEL FINISHED U.O.N.
3. SEE 'PRECAST PANEL DETAILS' SHEET FOR CORNICE PROFILE (CP - #) AND SWEEP PROFILE (SP - #) INFORMATION
4. ALL BRICK MASONRY IS TO BE PLACED IN A RUNNING BOND PATTERN.
5. SEE SHEET G001 FOR EXTERIOR BUILDING FINISHES

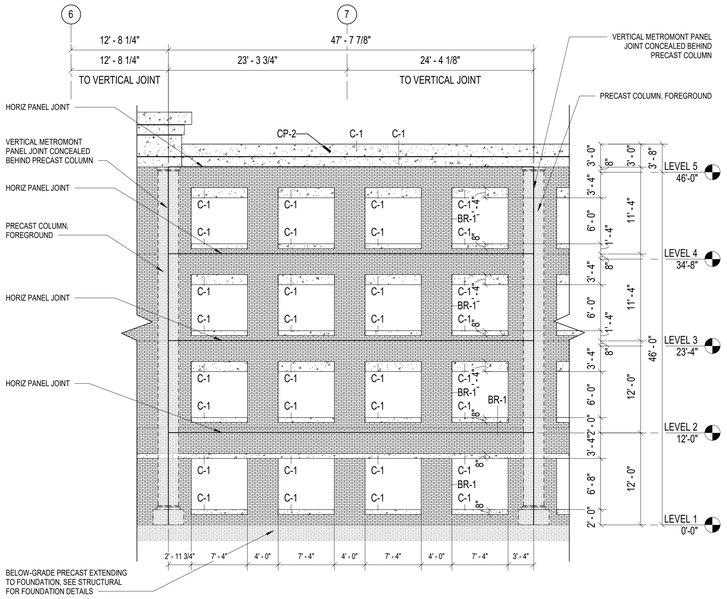

3 PRECAST ELEVATION - SOUTH - GRID 6 & 7
1/8" = 1'-0" REF 1 / AE701

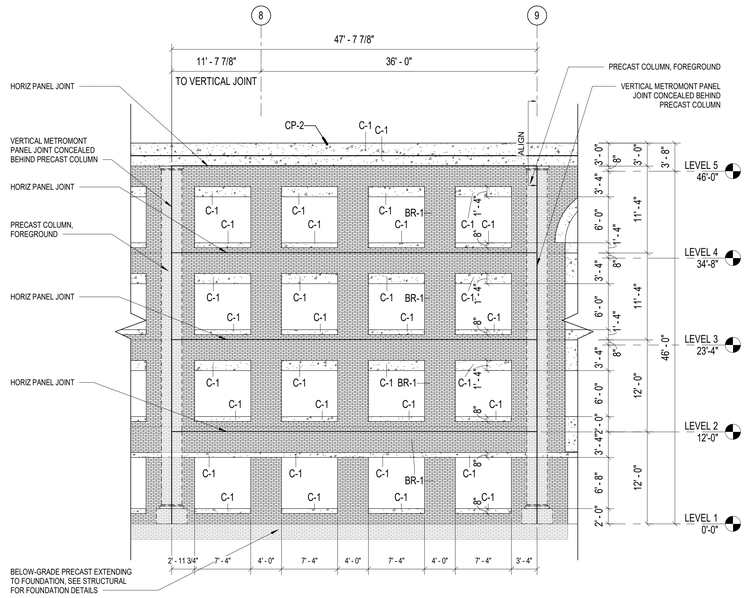

2 PRECAST ELEVATION - SOUTH - GRID 8 & 9
1/8" = 1'-0" REF 1 / AE701

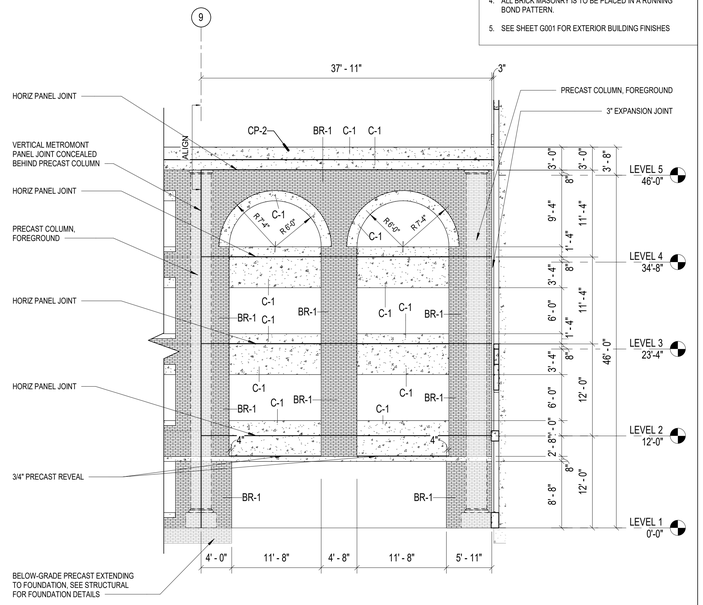

1 PRECAST ELEVATION - SOUTH - GRID 9
1/8" = 1'-0" REF 1 / AE701

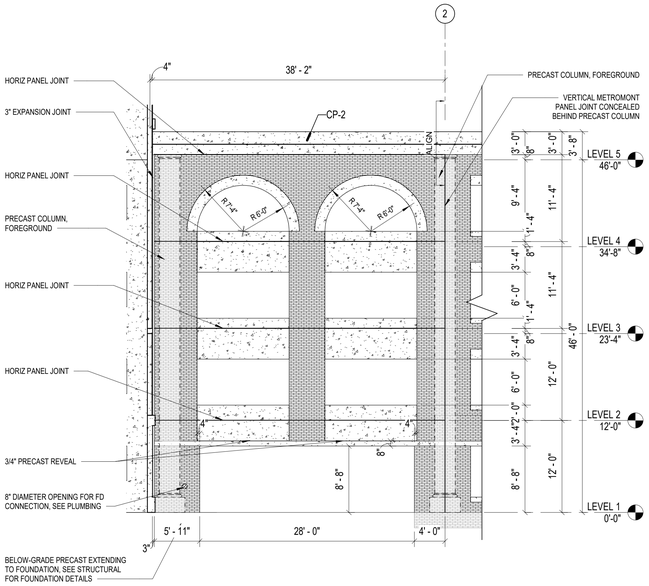

7 PRECAST ELEVATION - SOUTH - GRID 2
1/8" = 1'-0" REF 1 / AE701

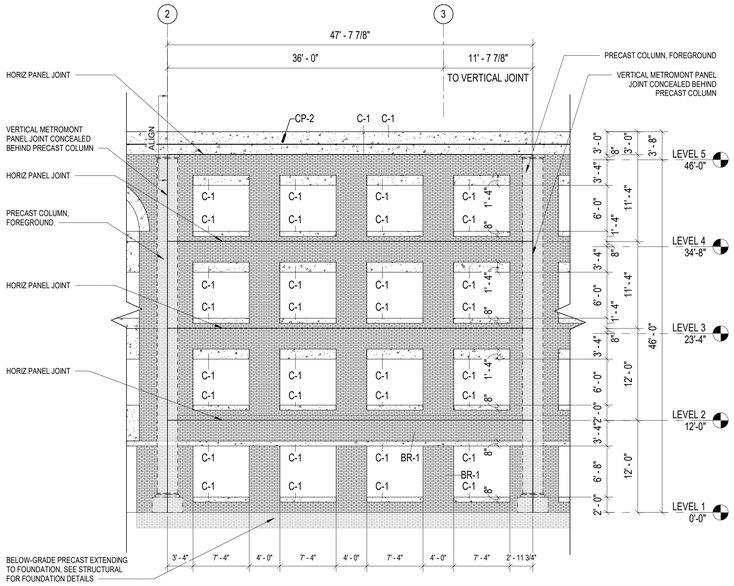

6 PRECAST ELEVATION - SOUTH - GRID 2 & 3
1/8" = 1'-0" REF 1 / AE701

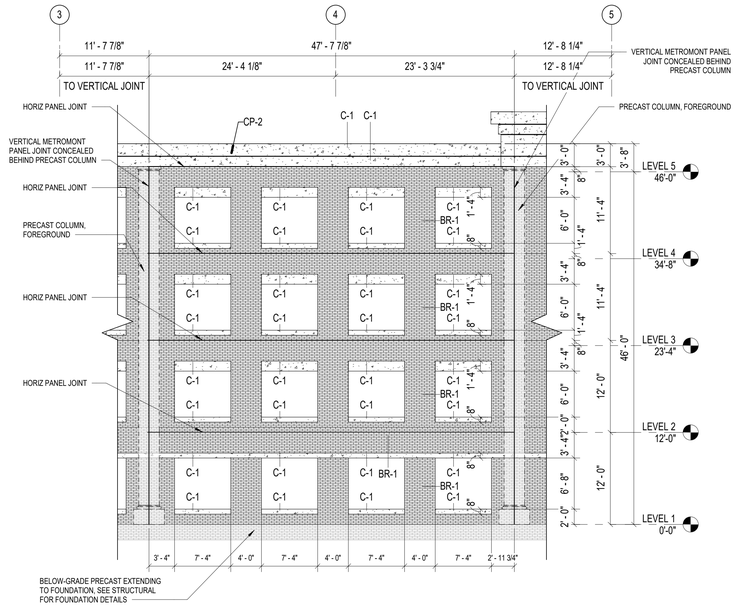

5 PRECAST ELEVATION - SOUTH - GRID 3 & 5
1/8" = 1'-0" REF 1 / AE701

UNCW
UNIVERSITY of NORTH CAROLINA WILMINGTON
601 S COLLEGE ROAD
WILMINGTON, NORTH CAROLINA 28403

PARKING DECK II AND SURFACE PARKING (DESIGN-BUILD)
SOUTH CAMPUS - 4965 RIEGEL ROAD

SCO ID NUMBER: 18-19226-01A
CODE: 41828
ITEM: 301

CONTRACTOR
Balfour Beatty Construction

DESIGNER

CLARKNEXSEN
1523 ELIZABETH AVENUE, SUITE 300
CHARLOTTE, NORTH CAROLINA 28204
704·377·8800
CLARK NEXSEN LICENSE NUMBER: C-1028

WALKER CONSULTANTS
13860 Ballantyne Corporate Place
Suite 140
Charlotte, NC 28277
T: 704.247.6230
www.walkerconsultants.com
NC License No. F-0518

McKIM&CREED
CIVIL ENGINEER
243 NORTH FRONT STREET
WILMINGTON, NORTH CAROLINA
28401
910.343.1048

PROFESSIONAL SEAL
NOT FOR CONSTRUCTION
CLARK NEXSEN
CERT NO. 50680
NORTH CAROLINA
NC CORPORATE ENGINEERING LICENSE #C-1028

SUBMITTAL
04/15/2019
CONSTRUCTION DOCUMENT SUBMITTAL 01

REVISIONS

KEY PLAN

SHEET
PRECAST PANEL ELEVATIONS

AE703

DESIGN: Designer
DRAWN: Author
REVIEW: Checker

CN 8112

4/15/2019 5:45:52 PM
C:\Revit Projects\8112_UNCW_Parking_Deck_II_A17_mpurdy.rvt

PRECAST PANEL LEGEND

C-1 - EXPOSED PRECAST CONCRETE WITH COLORED ADMIXTURE, SANDBLAST FINISH
C-2 - EXPOSED PRECAST, STANDARD GRAY COLOR

BR-1 - PRECAST MASONRY VENEER, RUNNING BOND (SEE SPEC SECTION FOR COLOR)

GENERAL NOTE:

1. COLOR ADMIXTURE TO BE SELECTED BY ARCHITECT FROM MANUFACTURER'S FULL RANGE OF COLORS
2. NON-FORM SIDE OF INTERIOR AND EXTERIOR PRECAST STRUCTURAL CONCRETE PANELS ARE TO BE TROWEL FINISHED U.O.N.
3. SEE 'PRECAST PANEL DETAILS' SHEET FOR CORNICE PROFILE (CP - #) AND SWEEP PROFILE (SP - #) INFORMATION
4. ALL BRICK MASONRY IS TO BE PLACED IN A RUNNING BOND PATTERN.
5. SEE SHEET G001 FOR EXTERIOR BUILDING FINISHES

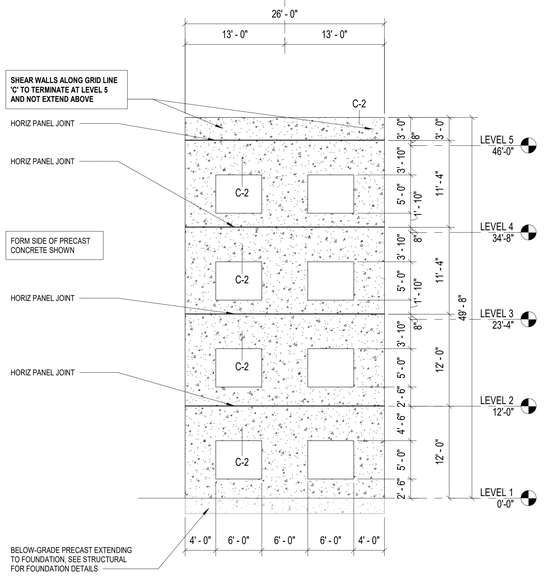

3 PRECAST ELEVATION - 16" SHEAR WALL
1/8" = 1'-0" REF 1 / AE701

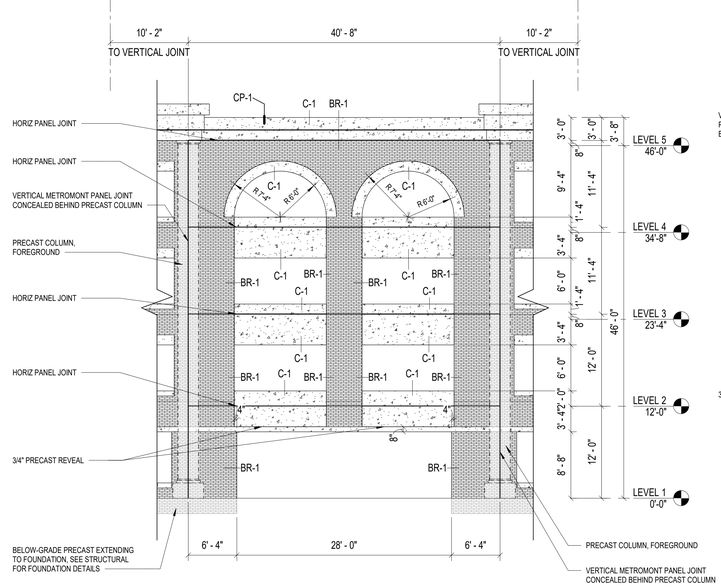

2 Elevation 16 - a
1/8" = 1'-0" REF 1 / AE701

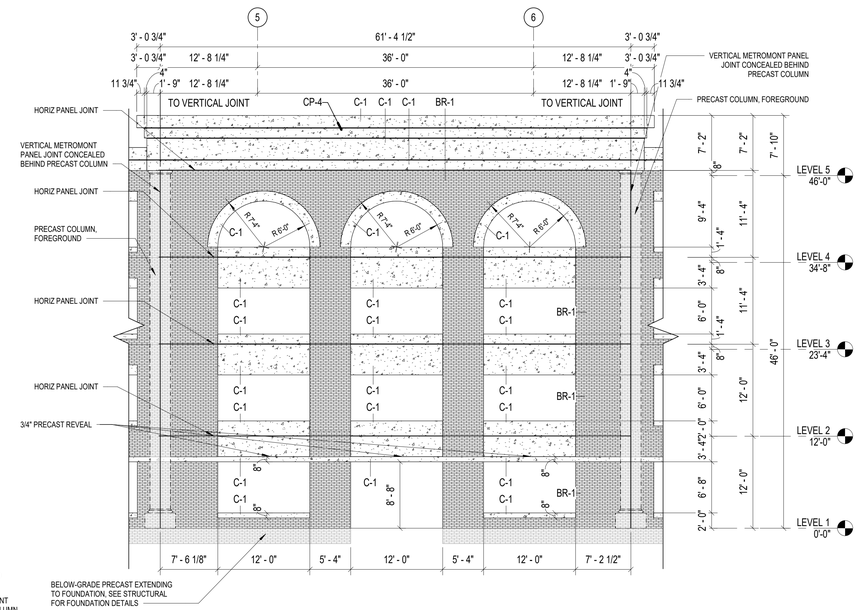

1 PRECAST ELEVATION - SOUTH - GRID 5 & 6
1/8" = 1'-0" REF 1 / AE701

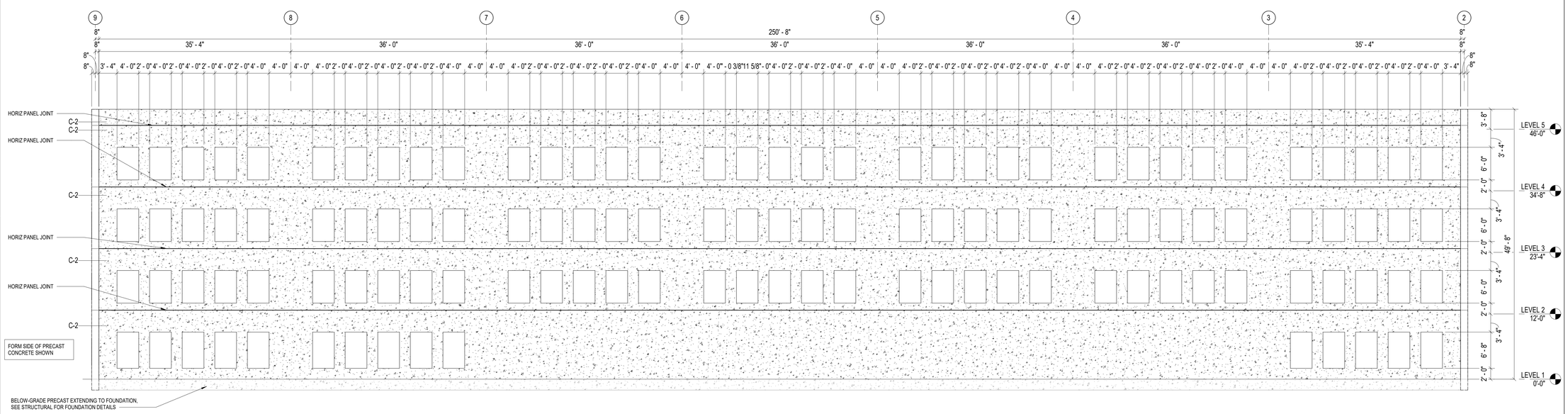

4 PRECAST ELEVATION - INTERIOR WALL
1/8" = 1'-0" REF 1 / AE701

UNCW
UNIVERSITY of NORTH CAROLINA WILMINGTON
601 S COLLEGE ROAD
WILMINGTON, NORTH CAROLINA 28403

PARKING DECK II AND SURFACE PARKING (DESIGN-BUILD)
SOUTH CAMPUS - 4965 RIEGEL ROAD

SCO ID NUMBER: 18-19226-01A
CODE: 41828
ITEM: 301

CONTRACTOR
Balfour Beatty Construction

DESIGNER

CLARKNEXSEN
1523 ELIZABETH AVENUE, SUITE 300
CHARLOTTE, NORTH CAROLINA 28204
704·377·8800
CLARK NEXSEN LICENSE NUMBER: C-1028

WALKER CONSULTANTS
13860 Ballantyne Corporate Place
Suite 140
Charlotte, NC 28277
T: 704.247.6230
www.walkerconsultants.com
NC License No. F-0518

McKIM&CREED
CIVIL ENGINEER
243 NORTH FRONT STREET
WILMINGTON, NORTH CAROLINA
28401
910.343.1048

PROFESSIONAL SEAL

NOT FOR CONSTRUCTION
CLARK NEXSEN
CERT NO. 50680
NORTH CAROLINA

NC CORPORATE ENGINEERING LICENSE #C-1028

SUBMITTAL
04/15/2019
CONSTRUCTION DOCUMENT SUBMITTAL 01

REVISIONS

KEY PLAN

SHEET
PRECAST PANEL ELEVATIONS

AE704

DESIGN: Designer
DRAWN: Author
REVIEW: Checker

CN 8112

4/15/2019 5:45:56 PM
C:\Revit Projects\8112_UNCW_Parking_Deck_II_A17_mpsurdy.rvt

PRECAST PANEL LEGEND

C-1 - EXPOSED PRECAST CONCRETE WITH COLORED ADMIXTURE, SANDBLAST FINISH
C-2 - EXPOSED PRECAST, STANDARD GRAY COLOR

BR-1 - PRECAST MASONRY VENEER, RUNNING BOND (SEE SPEC SECTION FOR COLOR)

GENERAL NOTE:

1. COLOR ADMIXTURE TO BE SELECTED BY ARCHITECT FROM MANUFACTURER'S FULL RANGE OF COLORS
2. NON-FORM SIDE OF INTERIOR AND EXTERIOR PRECAST STRUCTURAL CONCRETE PANELS ARE TO BE TROWEL FINISHED U.O.N.
3. SEE 'PRECAST PANEL DETAILS' SHEET FOR CORNICE PROFILE (CP - #) AND SWEEP PROFILE (SP - #) INFORMATION
4. ALL BRICK MASONRY IS TO BE PLACED IN A RUNNING BOND PATTERN.
5. SEE SHEET G001 FOR EXTERIOR BUILDING FINISHES

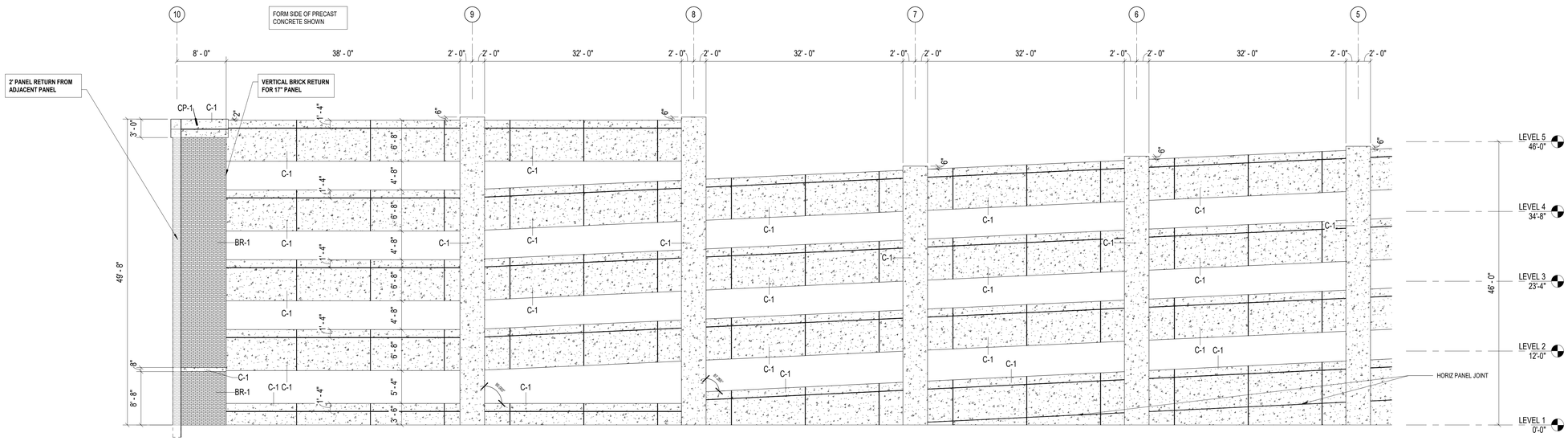

2 PRECAST ELEVATION - NORTH - GRID 10 & 5

1/8" = 1'-0" REF 1 / AE701

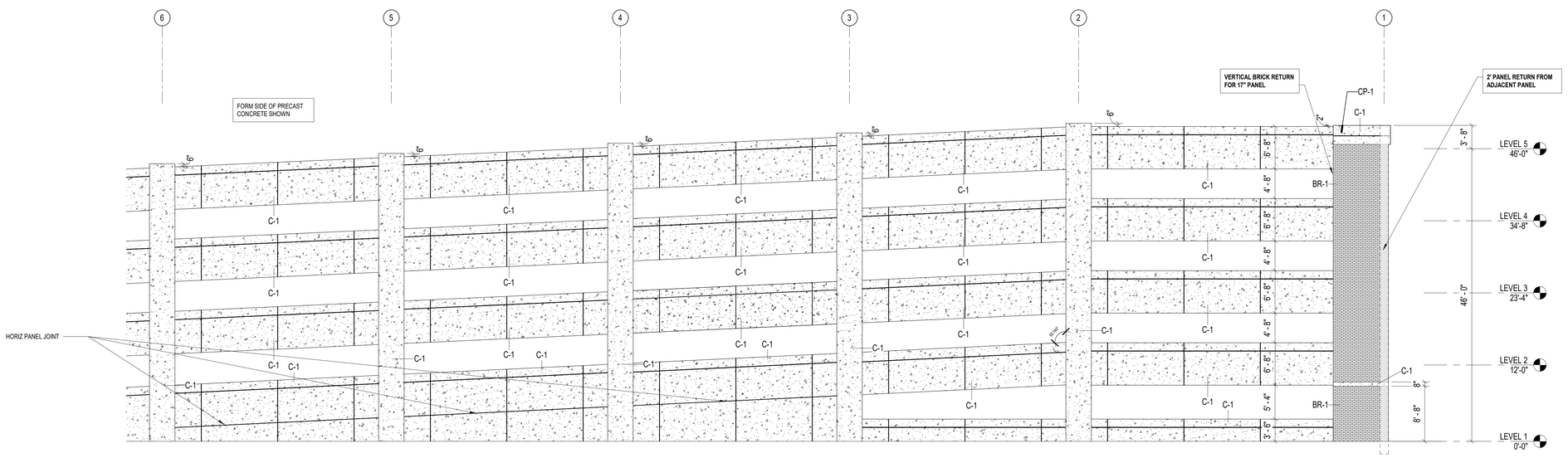

1 PRECAST ELEVATION - NORTH - GRID 6 & 1

1/8" = 1'-0" REF 1 / AE701

UNCW
UNIVERSITY of NORTH CAROLINA WILMINGTON
601 S COLLEGE ROAD
WILMINGTON, NORTH CAROLINA 28403

PARKING DECK II AND SURFACE PARKING (DESIGN-BUILD)
SOUTH CAMPUS - 4965 RIEGEL ROAD

SCO ID NUMBER: 18-19226-01A
CODE: 41828
ITEM: 301

CONTRACTOR
Balfour Beatty Construction

DESIGNER

CLARKNEXSEN
1523 ELIZABETH AVENUE, SUITE 300
CHARLOTTE, NORTH CAROLINA 28204
704·377·8800
CLARK NEXSEN LICENSE NUMBER: C-1028

WALKER CONSULTANTS
13860 Ballantyne Corporate Place
Suite 140
Charlotte, NC 28277
T: 704.247.6230
www.walkerconsultants.com
NC License No. F-0518

McKIM&CREED
CIVIL ENGINEER
243 NORTH FRONT STREET
WILMINGTON, NORTH CAROLINA
28401
910.343.1048

PROFESSIONAL SEAL
NOT FOR CONSTRUCTION
CLARK NEXSEN CERT NO. 50680 NORTH CAROLINA
NC CORPORATE ENGINEERING LICENSE #C-1028

SUBMITTAL
04/15/2019
CONSTRUCTION DOCUMENT SUBMITTAL 01

REVISIONS

KEY PLAN

SHEET
PRECAST PANEL ELEVATIONS

AE705

DESIGN: Designer
DRAWN: Author
REVIEW: Checker

CN 8112

4/15/2019 5:45:59 PM
C:\Revit Projects\8112_UNCW_Parking_Deck_II_AA17_nsparsly.rvt

PRECAST PANEL LEGEND

C-1 - EXPOSED PRECAST CONCRETE WITH COLORED ADMIXTURE, SANDBLAST FINISH
C-2 - EXPOSED PRECAST, STANDARD GRAY COLOR

BR-1 - PRECAST MASONRY VENEER, RUNNING BOND (SEE SPEC SECTION FOR COLOR)

GENERAL NOTE:

1. COLOR ADMIXTURE TO BE SELECTED BY ARCHITECT FROM MANUFACTURER'S FULL RANGE OF COLORS
2. NON-FORM SIDE OF INTERIOR AND EXTERIOR PRECAST STRUCTURAL CONCRETE PANELS ARE TO BE TROWEL FINISHED U.O.N.
3. SEE 'PRECAST PANEL DETAILS' SHEET FOR CORNICE PROFILE (CP - #) AND SWEEP PROFILE (SP - #) INFORMATION
4. ALL BRICK MASONRY IS TO BE PLACED IN A RUNNING BOND PATTERN.
5. SEE SHEET G001 FOR EXTERIOR BUILDING FINISHES

PRECAST SWEEPS TO HAVE C-1 FINISH, TYPICAL

SEE PRECAST PANEL ELEVATIONS FOR LOCATIONS OF SWEEPS

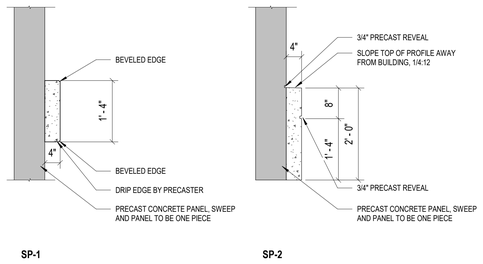

3 PRECAST SWEEP PROFILES

3/4" = 1'-0"

PRECAST CORNICES TO HAVE C-1 FINISH, TYPICAL

SEE PRECAST PANEL ELEVATIONS FOR LOCATIONS OF CORNICE PROFILES

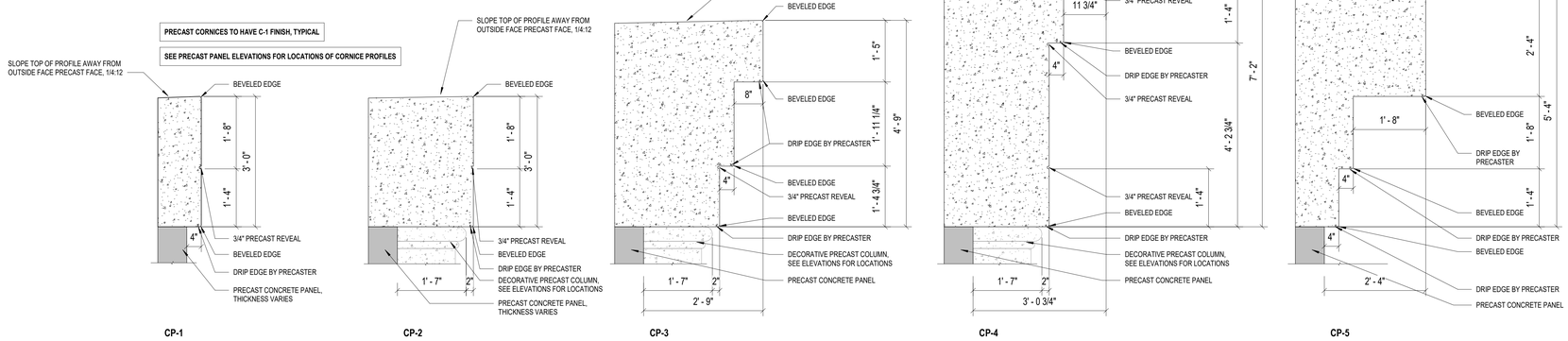

2 PRECAST CORNICE PROFILES

3/4" = 1'-0"

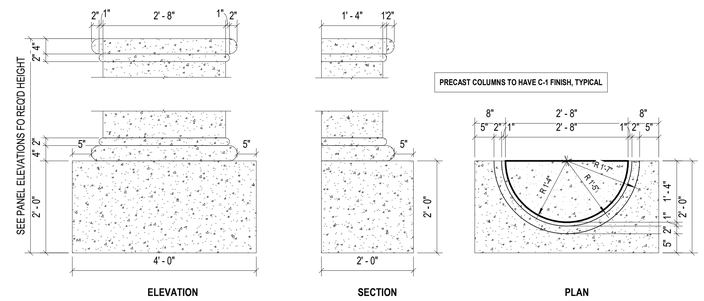

1 DECORATIVE PRECAST COLUMN, TYP.

3/4" = 1'-0"

UNIVERSITY of NORTH CAROLINA WILMINGTON
601 S COLLEGE ROAD
WILMINGTON, NORTH CAROLINA 28403

PARKING DECK II AND SURFACE PARKING (DESIGN-BUILD)
SOUTH CAMPUS - 4965 RIEGEL ROAD

SCO ID NUMBER: 18-19226-01A
CODE: 41828
ITEM: 301

CONTRACTOR
Balfour Beatty Construction

DESIGNER
CLARKNEXSEN
1523 ELIZABETH AVENUE, SUITE 300
CHARLOTTE, NORTH CAROLINA 28204
704·377·8800

CLARK NEXSEN LICENSE NUMBER: C-1028

WALKER CONSULTANTS
13860 Ballantyne Corporate Place
Suite 140
Charlotte, NC 28277
T: 704.247.6230
www.walkerconsultants.com
NC License No. F-0518

McKIM&CREED
CIVIL ENGINEER
243 NORTH FRONT STREET
WILMINGTON, NORTH CAROLINA
28401
910.343.1048

PROFESSIONAL SEAL
NOT FOR CONSTRUCTION
CLARK NEXSEN
CERT NO. 50680
NORTH CAROLINA

NC CORPORATE ENGINEERING LICENSE #C-1028

SUBMITTAL
04/15/2019
CONSTRUCTION DOCUMENT SUBMITTAL 01

REVISIONS

KEY PLAN

SHEET
PRECAST PANEL DETAILS

AE710

DESIGN: Designer
DRAWN: Author
REVIEW: Checker

CN 8112

4/15/2019 5:46:00 PM
C:\Revit Projects\8112_UNCW_Parking_Deck_II_AA17_rsparsly.rvt

FIRE ALARM LEGEND

FACP	FIRE ALARM CONTROL PANEL
NAC	NOTIFICATION APPLIANCE CIRCUIT PANEL
Ⓗ	HEAT DETECTOR, CEILING MOUNTED
Ⓢ	SMOKE DETECTOR, CEILING MOUNTED
CM	CONTACT MONITOR MODULE
F	MANUAL PULL STATION, MOUNT 4'-0" AFF
DACT	DIGITAL ALARM COMMUNICATOR TRANSMITTER

ABBREVIATIONS

O.C.	ON CENTER
EP	ELECTRICAL POWER (120V AC)
WP	WEATHERPROOF / OUTDOOR RATED (SUBSCRIPT)
C	CEILING MOUNTED (SUBSCRIPT)
E	EXISTING (SUBSCRIPT)
FACP	FIRE ALARM CONTROL PANEL

GENERAL NOTES

1. DEDICATED FUNCTION FIRE ALARM SYSTEM SHALL BE INSTALLED IN ACCORDANCE WITH NFPA 72 - 2013 EDITION. PROVIDE WIRING AS RECOMMENDED BY MANUFACTURER.
2. COORDINATE FIRE ALARM SYSTEM WITH ALL TRADES TO ENSURE PROPER COMPLIANCE WITH CODES AND TO AVOID CONFLICTS.
3. IN AREAS WITH LAY-IN CEILING TILES, INSTALL CEILING MOUNTED FIRE ALARM DEVICES CENTER OF TILE.
4. NO PIPE PENETRATIONS OF STRUCTURAL MEMBERS, EXCEPT AS NOTED, ARE PERMITTED WITHOUT THE APPROVAL OF THE ARCHITECT/ENGINEER.
5. ALL FIRE ALARM APPLIANCES, DEVICES, BACKBOXES, AND JUNCTION BOXES MUST BE OUTDOOR RATED, INCLUDING ITEMS INSIDE OF ROOMS.

SYSTEM INPUT	ACTIVATE COMMON ALARM SIGNAL INDICATOR	ACTIVATE AUDIBLE ALARM SIGNAL	ACTIVATE COMMON SUPERVISORY SIGNAL INDICATOR	ACTIVATE AUDIBLE SUPERVISORY SIGNAL	ACTIVATE COMMON TROUBLE SIGNAL INDICATOR	ACTIVATE AUDIBLE TROUBLE SIGNAL	DISPLAY CHANGE OF STATUS	TRANSMIT ALARM SIGNAL TO RECEIVING STATION	TRANSMIT SUPERVISORY SIGNAL TO RECEIVING STATION	TRANSMIT TROUBLE SIGNAL TO RECEIVING STATION	RECALL ELEVATOR TO 1ST FLOOR	RECALL ELEVATOR TO 2ND FLOOR	ILLUMINATE FIRE HAT (FLASH)
MANUAL PULL STATION	●	●					●	●					
AREA SMOKE DETECTOR	●	●					●	●					
AREA SMOKE DETECTOR (ELEV. MACH. ROOM)	●	●					●	●			●		●
HEAT DETECTOR (1ST FLR ELEV. LANDING)	●	●					●	●				●	
HEAT DETECTOR (OTHER FLR ELEV. LANDING)	●	●					●	●			●		
STANDPIPE ISOLATION VALVE TAMPER SWITCH			●	●			●		●				
OPEN CIRCUIT					●	●	●			●			
GROUND FAULT					●	●	●			●			

1 DEDICATED FUNCTION FIRE ALARM SYSTEM SEQUENCE OF OPERATION MATRIX
NO SCALE

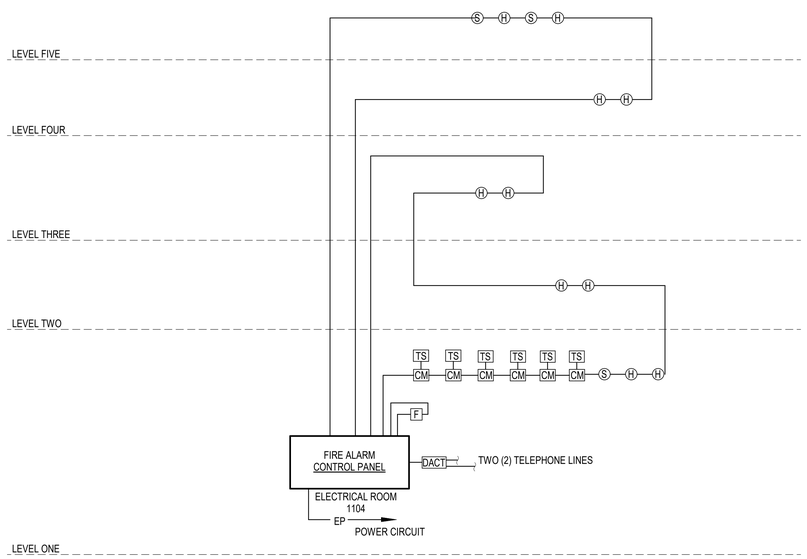

2 DEDICATED FUNCTION FIRE ALARM SYSTEM RISER DIAGRAM
NO SCALE

NOTES:

1. COORDINATE WITH SPRINKLER CONTRACTOR FOR QUANTITY OF FLOW AND TAMPER SWITCH MONITORING POINTS AND THEIR EXACT LOCATION.
2. RISER DIAGRAM IS FOR REFERENCE ONLY. DEVICE LOCATIONS AND QUANTITIES SHALL BE AS SHOWN ON THE FLOOR PLANS.

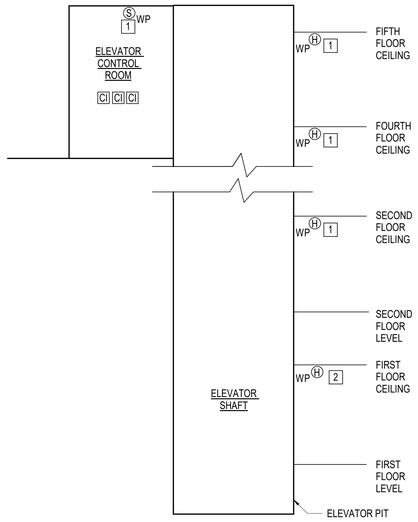

ELEVATOR NOTES

1. DETECTOR FOR PRIMARY FLOOR RECALL.
2. DETECTOR FOR ALTERNATE FLOOR RECALL.

3 ELEVATOR FIRE PROTECTION DIAGRAM
NO SCALE

UNCW
UNIVERSITY of NORTH CAROLINA WILMINGTON
601 S COLLEGE ROAD
WILMINGTON, NORTH CAROLINA 28403

PARKING DECK II AND SURFACE PARKING (DESIGN-BUILD)
SOUTH CAMPUS - 4965 RIEGEL ROAD

SCO ID NUMBER: 18-19226-01A
CODE: 41828
ITEM: 301

CONTRACTOR
Balfour Beatty Construction

DESIGNER

CLARKNEXSEN
1523 ELIZABETH AVENUE, SUITE 300
CHARLOTTE, NORTH CAROLINA 28204
704·377·8800
CLARK NEXSEN LICENSE NUMBER: C-1028

WALKER CONSULTANTS
13860 Ballantyne Corporate Place
Suite 140
Charlotte, NC 28277
T: 704.247.6230
www.walkerconsultants.com
NC License No. F-0518

McKIM&CREED
CIVIL ENGINEER
243 NORTH FRONT STREET
WILMINGTON, NORTH CAROLINA
28401
910.343.1048

PROFESSIONAL SEAL
NOT FOR CONSTRUCTION
CLARK NEXSEN NORTH CAROLINA CERT NO. 50680
NORTH CAROLINA PROFESSIONAL ENGINEER SEAL 041524 STRUCTURAL
NC CORPORATE ENGINEERING LICENSE #C-1028

SUBMITTAL
04/15/2019
CONSTRUCTION DOCUMENT SUBMITTAL 01

REVISIONS

KEY PLAN

SHEET
FIRE ALARM LEGEND NOTES AND DETAILS

FA001

DESIGN: Designer
DRAWN: Author
REVIEW: Checker

CN 8112

4/15/2019 1:07:19 PM
C:\Revit Projects\8112_UNCW_Parking_Deck_II_F17_kcrane@clarknexsen.com.rvt

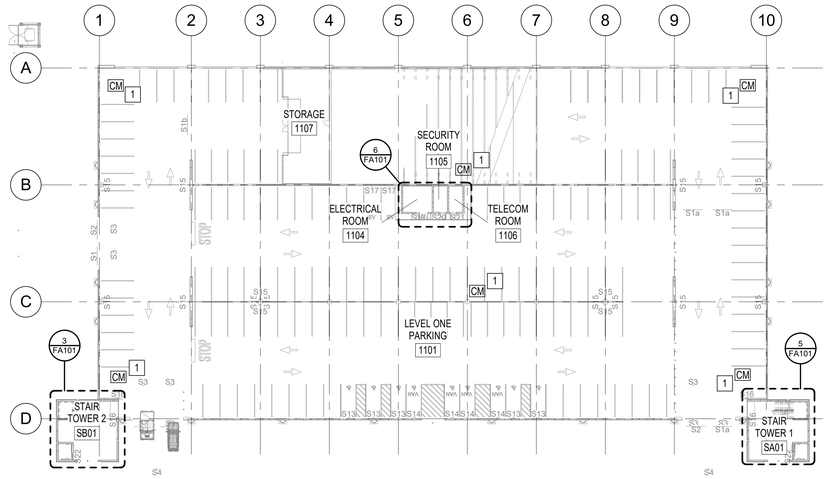

1 FIRST LEVEL
1/32" = 1'-0"

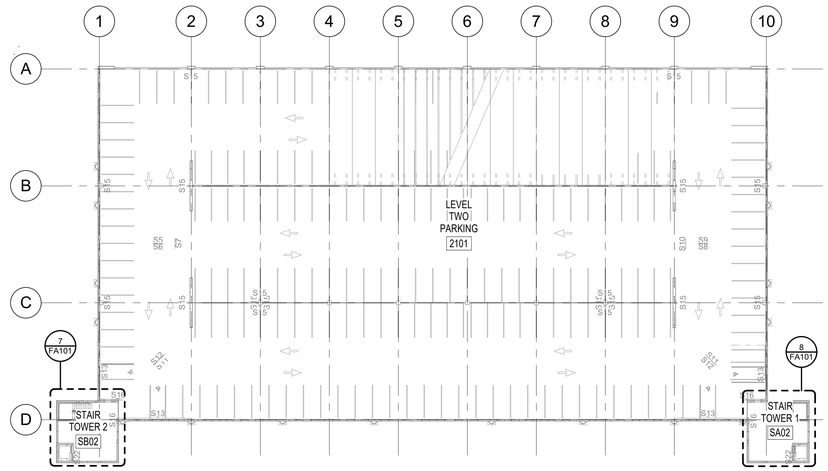

4 SECOND THROUGH FOURTH LEVELS
1/32" = 1'-0"

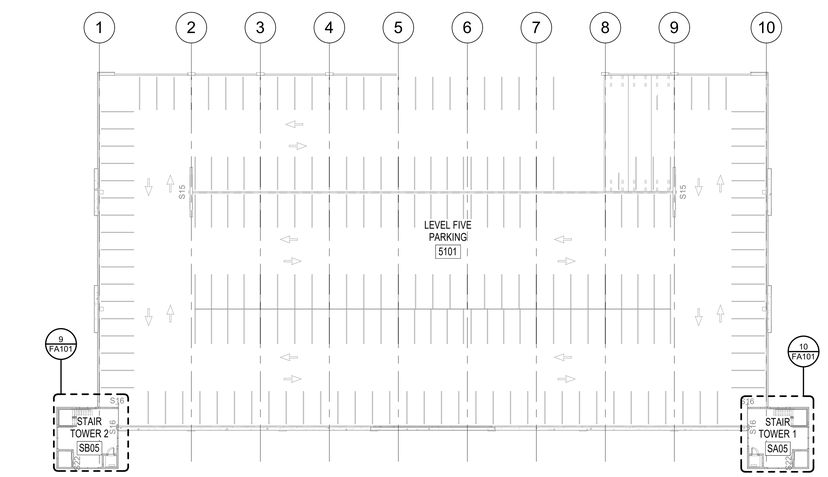

2 FIFTH LEVEL
1/32" = 1'-0"

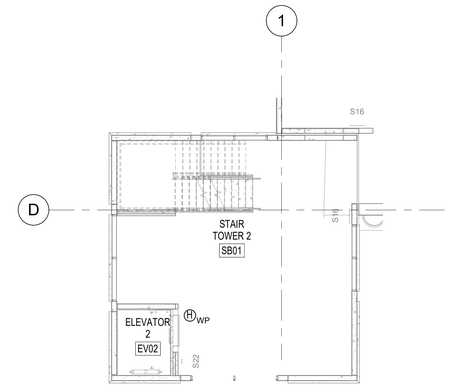

3 FIRST LEVEL - WEST STAIR
1/8" = 1'-0"

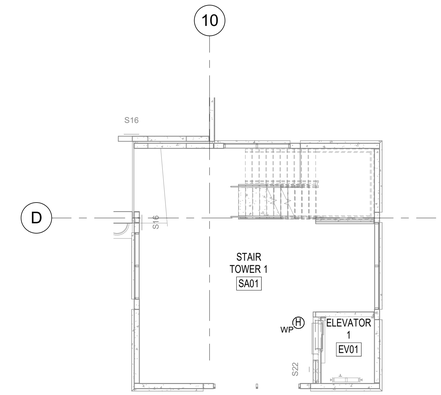

5 FIRST LEVEL - EAST STAIR
1/8" = 1'-0"

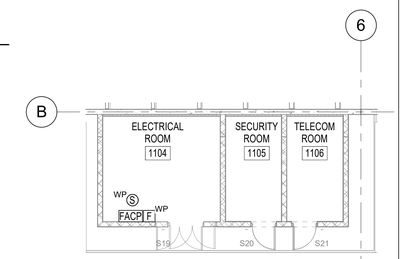

6 FIRST LEVEL ELECTRICAL ROOM
1/8" = 1'-0"

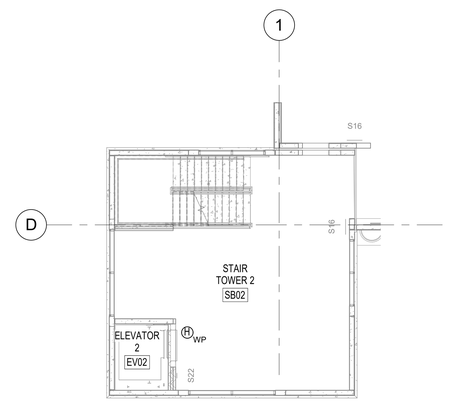

7 WEST STAIR
1/8" = 1'-0"

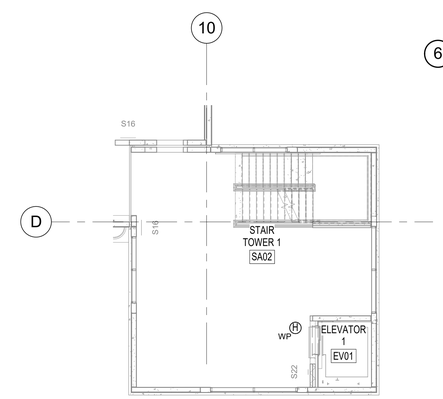

8 EAST STAIR
1/8" = 1'-0"

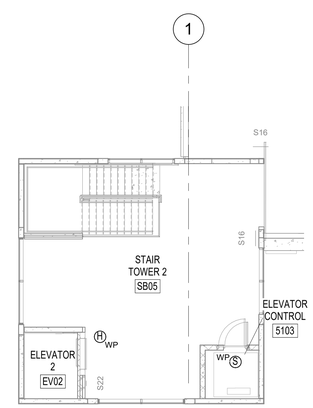

9 FIFTH LEVEL - WEST STAIR
1/8" = 1'-0"

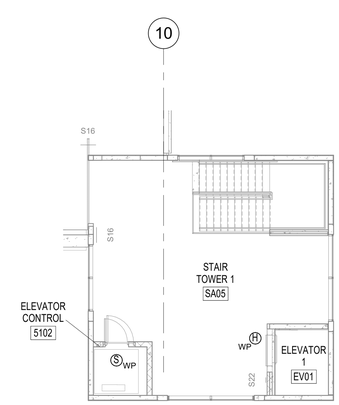

10 FIFTH LEVEL - EAST STAIR
1/8" = 1'-0"

KEY NOTES

1. CONTACT MONITOR MODULE FOR STANDPIPE ISOLATION VALVE TAMPER SWITCH MONITORING. SEE FP SERIES SHEETS FOR COORDINATION.

GRAPHIC SCALE(S)

3/128" = 1' - 0" 0 10' 20' 40' 80' 160'

1/8" = 1' - 0" 0 5' 10' 15' 30'

UNCW
UNIVERSITY of NORTH CAROLINA WILMINGTON
601 S COLLEGE ROAD
WILMINGTON, NORTH CAROLINA 28403

PARKING DECK II AND SURFACE PARKING (DESIGN-BUILD)
SOUTH CAMPUS - 4965 RIEGEL ROAD

SCO ID NUMBER: 18-19226-01A
CODE: 41828
ITEM: 301

CONTRACTOR
Balfour Beatty Construction

DESIGNER

CLARKNEXSEN
1523 ELIZABETH AVENUE, SUITE 300
CHARLOTTE, NORTH CAROLINA 28204
704·377·8800

CLARK NEXSEN LICENSE NUMBER: C-1028

WALKER CONSULTANTS
13860 Ballantyne Corporate Place
Suite 140
Charlotte, NC 28277
T: 704.247.6230
www.walkerconsultants.com
NC License No. F-0518

McKIM&CREED
CIVIL ENGINEER
243 NORTH FRONT STREET
WILMINGTON, NORTH CAROLINA
28401
910.343.1048

PROFESSIONAL SEAL

NOT FOR CONSTRUCTION
CLARK NEXSEN NORTH CAROLINA CERT NO. 50680
NORTH CAROLINA PROFESSIONAL SEAL 041524 ENGINEER MARK CRANE

NC CORPORATE ENGINEERING LICENSE #C-1028

SUBMITTAL
04/15/2019
CONSTRUCTION DOCUMENT SUBMITTAL 01

REVISIONS

KEY PLAN

SHEET
FIRE ALARM FLOOR PLANS

FA101

DESIGN: Designer
DRAWN: Author
REVIEW: Checker

CN 8112

4/15/2019 1:07:22 PM
C:\Revit Projects\8112_UNCW_Parking_Deck_II_FY17_kcrane@clarknexsen.com.rvt

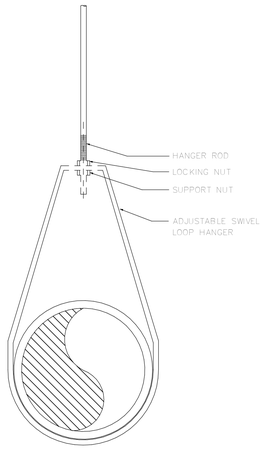

HANGER ROD SPACING								
PIPE SIZE	1"	1 1/4"	1 1/2"	2"	2 1/2"	3"	4"	6"	8"
MAX. ALLOWABLE SPACING	8 FT		10 FT		12 FT			
NOTE: FOR TRAPEZE HANGER TAKE SPACING OF SMALLEST PIPE ON TRAPEZE.								

2 ADJUSTABLE SWIVEL LOOP HANGER DETAIL
NO SCALE

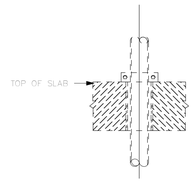

ELEVATION OF MULTIPLE SUPPORT FOR PIPE PASSING THROUGH SLAB.

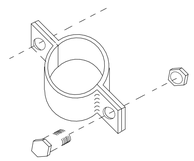

INDIVIDUAL PIPE CLAMP SUPPORT

1 VERTICAL PIPE SUPPORT DETAIL- FP
NO SCALE

FIRE PROTECTION LEGEND	
SYMBOL	DESCRIPTION
FP	FIRE PROTECTION
D	DRAIN
DROP RISE	DROP OR RISE
	FLOW ARROW
	VALVE IN RISER
	BALL VALVE
	BUTTERFLY VALVE
	STRAINER
6" FP #7	PIPE SIZE PIPE SYSTEM ABBREVIATION RISER DESIGNATION UTILITY RISER IDENTIFICATION

FIRE PROTECTION SHEET LIST	
Sheet Number	Sheet Name
FP001	FIRE PROTECTION LEGEND, SCHEDULES AND DETAILS
FP101	FIRST LEVEL - FIRE PROTECTION PLAN
FP102	SECOND LEVEL - FIRE PROTECTION PLAN
FP103	THIRD LEVEL - FIRE PROTECTION PLAN
FP104	FOURTH LEVEL - FIRE PROTECTION PLAN
FP105	FIFTH LEVEL - FIRE PROTECTION PLAN
FP201	FIRE PROTECTION PIPING ISOMETRIC

FIRE PROTECTION GENERAL NOTES	
NO.	DESCRIPTION
1	PIPE HANGERS AND CONCRETE INSERTS UTILIZED FOR FIRE PROTECTION THIS PROJECT SHALL BE PROVIDED BY THE FIRE PROTECTION SUB-CONTRACTOR. THIS INCLUDES ALL SUPPLEMENTAL STEEL, ETC.
2	ALL LINTELS REQUIRED IN MASONRY AND STUD WALLS FOR PIPING PENETRATIONS SHALL BE PROVIDED BY THE GENERAL CONTRACTOR.
3	COORDINATE VERTICAL PIPING WITH ARCHITECTURAL PLANS FOR EXACT LOCATION OF RISER. IF THERE IS A CONFLICT, NOTIFY THE ARCHITECT PRIOR TO INSTALLATION.
4	ALL SPRAY ON FIREPROOFING WHICH SETTLES ON FIRE PROTECTION PIPING SHALL BE REMOVED BY THE GENERAL CONTRACTOR.
5	HYDRAULIC CALCULATIONS AND FABRICATION SHOP DRAWINGS BASED ON ACTUAL CODE REFINEMENTS SHALL BE A PART OF THIS CONTRACT, FURNISHED BY THE FIRE PROTECTION SUB-CONTRACTOR.
6	THE FIRE PROTECTION DRAWINGS ARE APPLICABLE TO THE GENERAL CONTRACT.
7	COORDINATE ALL WORK OUTSIDE OF A DESIGNATED AREA OF GENERAL CONSTRUCTION WITH THE OWNER OR THE ARCHITECT'S REPRESENTATIVE.
8	THE FIRE PROTECTION CONTRACTOR SHALL BE RESPONSIBLE FOR DAILY CLEANUP AND DEBRIS REMOVAL OF ITEMS GENERATOR BY HIS WORK. ALL TRASH BINS USED SHALL BE INDEPENDENT OF THE OWNERS.
9	THE REQUIRED SHOP DRAWINGS SHALL SPECIFICALLY INDICATE ALL EXPOSED PIPING BY NOTE IN PUBLIC AREAS. THE CONTRACTOR SHALL PROVIDE DETAILS INDICATING THE METHOD OF ROUTING, HANGING AND COORDINATION WITH THE OTHER BUILDING COMPONENTS. THE EXPOSED PIPING SHALL BE ROUTED AS HIGH AS POSSIBLE AND IN AN ORDERLY MANNER.
10	THE FIRE PROTECTION SUB-CONTRACTOR SHALL COORDINATE THE PIPE ROUTING WITHIN THE ELECTRICAL ROOMS TO AVOID CROSSING OVER ELECTRICAL PANELS AND ELECTRICAL EQUIPMENT. THE FIRE PROTECTION SUB-CONTRACTOR SHALL SHOW THE ELECTRICAL PANELS AND ELECTRICAL EQUIPMENT ON THE REQUIRED SHOP DRAWING FLOOR PLANS AS CONFIRMATION OF THIS COORDINATION EFFORT.
11	THE FIRE PROTECTION CONTRACTOR SHALL BE RESPONSIBLE FOR COORDINATING THE SCOPE OF WORK BETWEEN THE TRADES PRIOR TO PERFORMING ANY WORK. REFER TO THE SPECIFICATIONS AND DETAILS FOR INSTALLATION INSTRUCTIONS.
12	ALL FIRE PROTECTION HANGERS, INSERTS, CLAMPS, STANCHIONS, BRACKETS, AND ALL THREAD RODS SHALL BE GALVANIZED.
13	NO PIPE PENETRATIONS OF STRUCTURAL MEMBERS, EXCEPT AS NOTED, ARE PERMITTED WITHOUT THE APPROVAL OF THE ARCHITECT/ENGINEER.
14	PROVIDE PIPE PENETRATIONS OF FIRE OR SMOKE PARTITIONS OR WALLS AND MAKE FIRE AND SMOKE TIGHT.
15	PROVIDE UL LISTED THROUGH PENETRATION FIRE STOPPING ASSEMBLIES FOR EACH PENETRATION OF FIRE-RATED ASSEMBLIES.

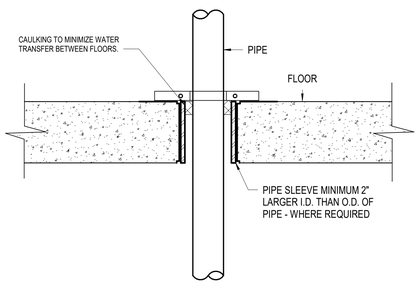

3 PIPE FLOOR PENETRATION - FP
NO SCALE

FIRE SPRINKLER CONTRACTOR NOTE:

SHOP DRAWINGS SHOULD INCLUDE AND BE IN ACCORDANCE WITH WORKING PLAN REQUIREMENTS OF CHAPTER 22 OF NFPA 13. PRODUCT DATA SHOULD INCLUDE AND IDENTIFY ALL MATERIAL, EQUIPMENT, AND ACCESSORY SELECTIONS TO BE INSTALLED.

A COPY OF THE WATER FLOW TEST SHOULD BE INCLUDED. THE HYDRAULIC CALCULATIONS AND SHOP DRAWINGS SHOULD BE SIGNED BY THE FIRE SPRINKLER DESIGNER AND INCLUDE THE NC FIRE SPRINKLER CONTRACTOR (FS) LICENSE NUMBER.

THE CONSTRUCTION DOCUMENTS ARE A PERFORMANCE DESIGN. THE FIRE SPRINKLER CONTRACTOR, AS THE DESIGNER AND CONTRACTOR, MUST PROVIDE ALL NECESSARY MATERIALS AND LABOR FOR A SYSTEM FULLY COMPLIANT WITH ALL APPLICABLE NFPA REQUIREMENTS AND THE CONSTRUCTION DOCUMENTS AT NO ADDITIONAL COST TO THE OWNER. ANY DISCREPANCIES SHOULD BE BROUGHT TO THE ATTENTION OF THE ENGINEER OF RECORD.

AN UPDATED WATER FLOW AND PRESSURE TEST IS TO BE OBTAINED BY THE FIRE SPRINKLER CONTRACTOR TO BE USED FOR THE WORKING PLAN DESIGN AND CALCULATIONS.

THE WATER FLOW TEST USED FOR THE WORKING PLAN DESIGN SHOULD BE PERFORMED AS INDICATED IN NFPA 13 WHICH USES TWO HYDRANTS; A PRESSURE HYDRANT AND A FLOW HYDRANT. THE TWO HYDRANTS SHOULD BE AS CLOSE TO THE POINT OF CONNECTION AS POSSIBLE. A COPY OF THE FLOW TEST AND TEST HYDRANT LOCATIONS SHOULD BE SUBMITTED WITH THE SHOP DRAWING PACKAGE.

AS A FACTOR OF SAFETY TO ACCOUNT FOR FLUCTUATIONS IN WATER SUPPLY, THE DESIGN CALCULATIONS SHOULD BE BASED ON AN AVAILABLE WATER SUPPLY OF 10 PSI LESS STATIC PRESSURE, 10 PSI LESS RESIDUAL PRESSURE AND 10% LESS RESIDUAL FLOW THAN MEASURED.

PER 2012 NCFC 1413.1, IN BUILDINGS REQUIRED TO HAVE STANDPIPES BY SECTION 905.3.1, NOT LESS THAN ONE STANDPIPE SHALL BE INSTALLED WHEN THE PROGRESS OF CONSTRUCTION IS NOT MORE THAN 40 FEET IN HEIGHT ABOVE THE LOWEST LEVEL OF FIRE DEPARTMENT VEHICLE ACCESS. SUCH STANDPIPE SHALL BE PROVIDED WITH FIRE DEPARTMENT HOSE CONNECTIONS AT ACCESSIBLE LOCATIONS ADJACENT TO USABLE STAIRS. SUCH STANDPIPES SHALL BE EXTENDED AS CONSTRUCTION PROGRESSES TO WITHIN ONE FLOOR OF THE HIGHEST POINT OF CONSTRUCTION HAVING SECURED DECKING OR FLOORING

THE PRESSURE AND FLOW WERE REDUCED PER THE REQUIREMENTS OF THE SCO GUIDELINES.

Graph Points	
43	Static Pressure
39	Residual Pressure
999	Residual Flow

Data Points	
Flow	Pressure
2569.130	20

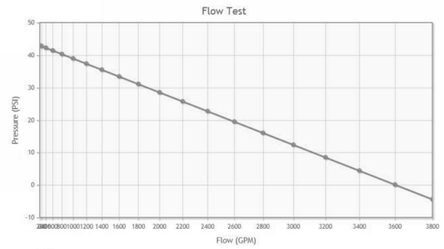

NOTE:

THE AVAILABLE FIRE FLOW AT 20 PSI WAS OBTAINED FROM THE CURRENT HYDRANT TEST DATA ADJUSTED PER THE SCO PRESSURE AND FLOW REDUCTIONS.

FIRE PROTECTION SYSTEM DESIGN CRITERIA	
WATER SUPPLY INFORMATION	
HYDRANT NO.(LOCATION):	HYDRANT NO. WH 0037 - FLOW HYDRANT
HYDRANT NO.(LOCATION):	HYDRANT NO. WH 0074 - PRESSURE HYDRANT
STATIC PRESSURE (PSIG):	53
RESIDUAL PRESSURE (PSIG):	49
HYDRANT NO.(LOCATION):	FLOW HYDRANT - LOCATED ALONG RIEGEL ROAD IN FRONT OF HERBERT FISHER FIELD HOUSE
PITOT PRESSURE (PSIG):	44 PSI
FLOW (GPM):	1110
CALCULATED FLOW AT 20 PSIG (GPM):	2569 (ADJUSTED FLOW PER THE SCO PRESSURE AND FLOW REDUCTIONS. REFER TO THE ADJACENT GRAPH)
DISTANCE TO TEST GAUGES (FT):	
HORIZONTAL:	NA FEET
ELEVATIONS:	
TEST HYDRANT:	XXX.00
BASE OF RISER:	XXX.00
SOURCE OF WATER SUPPLY :	
MUNICIPAL DEAD END	NA
MUNICIPAL RECIRCULATION	MUNICIPAL 10" WATER MAIN
OTHER:	NA
TESTED BY:	DAN SHOOK - McKIM & CREED
TEST DATE:	01.16.19 @ 2:15 PM
BACKFLOW PREVENTION SERVICE :	NA
NFPA HAZARD CLASSIFICATION	
STANDPIPES	MANUAL DRY CLASS 1 STANDPIPE SYSTEM
CODES AND STANDARDS	
SYSTEM COMPONENT	APPLICABLE NFPA STANDARD/YEAR EDITION OR OTHER APPLICABLE CODES OR STATUTES
FIRE PROTECTION	2018 NORTH CAROLINA FIRE PREVENTION CODE, STATE CONSTRUCTION OFFICE - WATER BASED FIRE PROTECTION SYSTEMS AND GUIDELINES AND POLICES 2014
SPRINKLER SYSTEM	NA
STANDPIPES	NFPA-14 - 2013 EDITION - HYDRAULICALLY CALCULATE THE MANUAL WET STANDPIPE BASED ON THE RESPONDING PUMPER TRUCK REQUIREMENTS AND 125 PSI AT THE HYDRAULICALY REMOTE 2-1/2" HOSE VALVE.
FIRE PUMP	NA
PRIVATE MAINS	NA
NOTES	
SPRINKLER CONTRACTOR IS REQUIRED TO ORDER A NEW FLOW TEST PRIOR TO SPRINKLER DESIGN IF THE TEST IS ONE YEAR OR MORE OLDER.	
SEISMIC DESIGN CRITERIA	
SEISMIC DESIGN CATEGORY	C
SEISMIC IMPORTANCE FACTOR	1.0

THE FIRE PROTECTION SYSTEM SEISMIC RETRAINTS SHALL BE DESIGNED AND PROVIDED PER THE REQUIREMENTS OF THE 2018 NORTH CAROLINA BUILDING CODE.

UNCW
UNIVERSITY of NORTH CAROLINA WILMINGTON
601 S COLLEGE ROAD
WILMINGTON, NORTH CAROLINA 28403

PARKING DECK II AND SURFACE PARKING (DESIGN-BUILD)
SOUTH CAMPUS - 4965 RIEGEL ROAD

SCO ID NUMBER: 18-19226-01A
CODE: 441828
ITEM: 301

CONTRACTOR
Balfour Beatty Construction

DESIGNER
CLARKNEXSEN
1523 ELIZABETH AVENUE, SUITE 300
CHARLOTTE, NORTH CAROLINA 28204
704·377·8800
CLARK NEXSEN LICENSE NUMBER: C-1028

WALKER CONSULTANTS
13860 Ballantyne Corporate Place
Suite 140
Charlotte, NC 28277
T: 704.247.6230
www.walkerconsultants.com
NC License No. F-0518

McKIM&CREED
CIVIL ENGINEER
243 NORTH FRONT STREET
WILMINGTON, NORTH CAROLINA
28401
910.343.1048

PROFESSIONAL SEAL

NOT FOR CONSTRUCTION

CLARK NEXSEN — CERT NO. 50680 — NORTH CAROLINA

NORTH CAROLINA PROFESSIONAL SEAL 023940 ENGINEER ANTHONY W. BRANDON

NC CORPORATE ENGINEERING LICENSE #C-1028

SUBMITTAL
04/15/19
CONSTRUCTION DOCUMENT SUBMITTAL 01

REVISIONS

KEY PLAN

SHEET
FIRE PROTECTION LEGEND, SCHEDULES AND DETAILS

FP001

DESIGN: AWB
DRAWN: AWB
REVIEW: CN

CN 8112

4/15/2019 2:07:40 PM
C:\Revit Projects\8172-UNCW Parking Deck II - P17_ABRANDON@CLARKNEXSEN.COM.rvt

FIRE PROTECTION KEYED NOTES

NO.	DESCRIPTION
S2	2-1/2" FIRE DEPARTMENT HOSE VALVE MOUNTED EXPOSED. THE VALVE SHALL BE PROVIDED WITH A 2-1/2" CAP AND CHAIN, SPANNER LUGS. PROVIDE A 2-1/2" NIPPLE BETWEEN THE VERTICAL RISER AND VALVE CONNECTION. THREADS SHALL MATCH THE WILMINGTON FIRE DEPARTMENT STANDARD.
S3	CHECK VALVE.
STZ	5" x 6" RIGID NPT STORZ CONNECTION, WALL MOUNTED 30 DEGREE DOWN TURN ANGLE, FORGED ALUMINUM CONSTRUCTION, NITRILE GASKETS, 250 PSI RATED, CAP AND CHAIN, POLISHED CHROME FINISH, AMERICAN FIRE HOSE & CABINET MODEL SZAX630KR OR EQUIVALENT BY GUARDIAN OR POTTER ROEMER.
TS	TAMPER SWITCH. THE TAMPER TAMPER SWITCH SHALL BE ELECTRICALLY SUPERVISED WITH THE BUILDING FIRE ALARM SYSTEM.

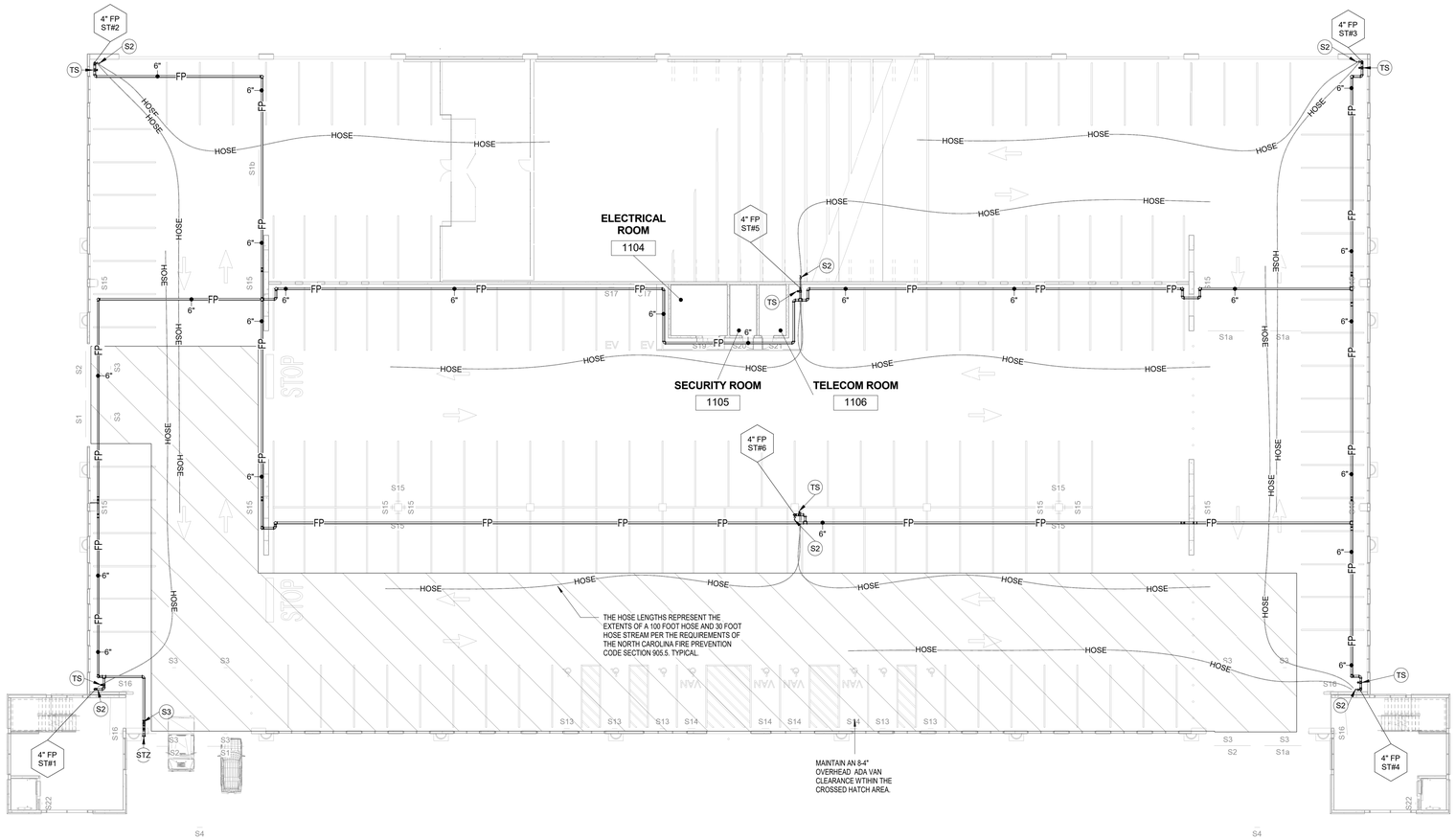

1 FIRST LEVEL - FIRE PROTECTION PLAN
1/16" = 1'-0"

1/8" = 1' - 0" 0 5' 10' 15' 30'

UNCW
UNIVERSITY of NORTH CAROLINA WILMINGTON
601 S COLLEGE ROAD
WILMINGTON, NORTH CAROLINA 28403

PARKING DECK II AND SURFACE PARKING (DESIGN-BUILD)
SOUTH CAMPUS - 4965 RIEGEL ROAD

SCO ID NUMBER: 18-19226-01A
CODE: 441828
ITEM: 301

CONTRACTOR
Balfour Beatty Construction

DESIGNER
CLARKNEXSEN
1523 ELIZABETH AVENUE, SUITE 300
CHARLOTTE, NORTH CAROLINA 28204
704·377·8800

CLARK NEXSEN LICENSE NUMBER: C-1028

WALKER CONSULTANTS
13860 Ballantyne Corporate Place
Suite 140
Charlotte, NC 28277
T: 704.247.6230
www.walkerconsultants.com
NC License No. F-0518

McKIM&CREED
CIVIL ENGINEER
243 NORTH FRONT STREET
WILMINGTON, NORTH CAROLINA
28401
910.343.1048

PROFESSIONAL SEAL
NORTH CAROLINA PROFESSIONAL SEAL 023940 ENGINEER ANTHONY W. BRANDON
CLARK NEXSEN CERT. NO. 50680 NORTH CAROLINA
NOT FOR CONSTRUCTION

NC CORPORATE ENGINEERING LICENSE #C-1028

SUBMITTAL
04/15/19
CONSTRUCTION DOCUMENT SUBMITTAL 01

REVISIONS

KEY PLAN

SHEET
FIRST LEVEL - FIRE PROTECTION PLAN

FP101

DESIGN: AWB
DRAWN: AWB
REVIEW: CN

CN 8112

4/15/2019 2:07:47 PM
C:\Revit Projects\8112-UNCW Parking Deck II - P17_ABRANDON@CLARKNEXSEN.COM.rvt

FIRE PROTECTION KEYED NOTES	
NO.	DESCRIPTION
S2	2-1/2" FIRE DEPARTMENT HOSE VALVE MOUNTED EXPOSED. THE VALVE SHALL BE PROVIDED WITH A 2-1/2" CAP AND CHAIN. SPANNER LUGS. PROVIDE A 2-1/2" NIPPLE BETWEEN THE VERTICAL RISER AND VALVE CONNECTION. THREADS SHALL MATCH THE WILMINGTON FIRE DEPARTMENT STANDARD.

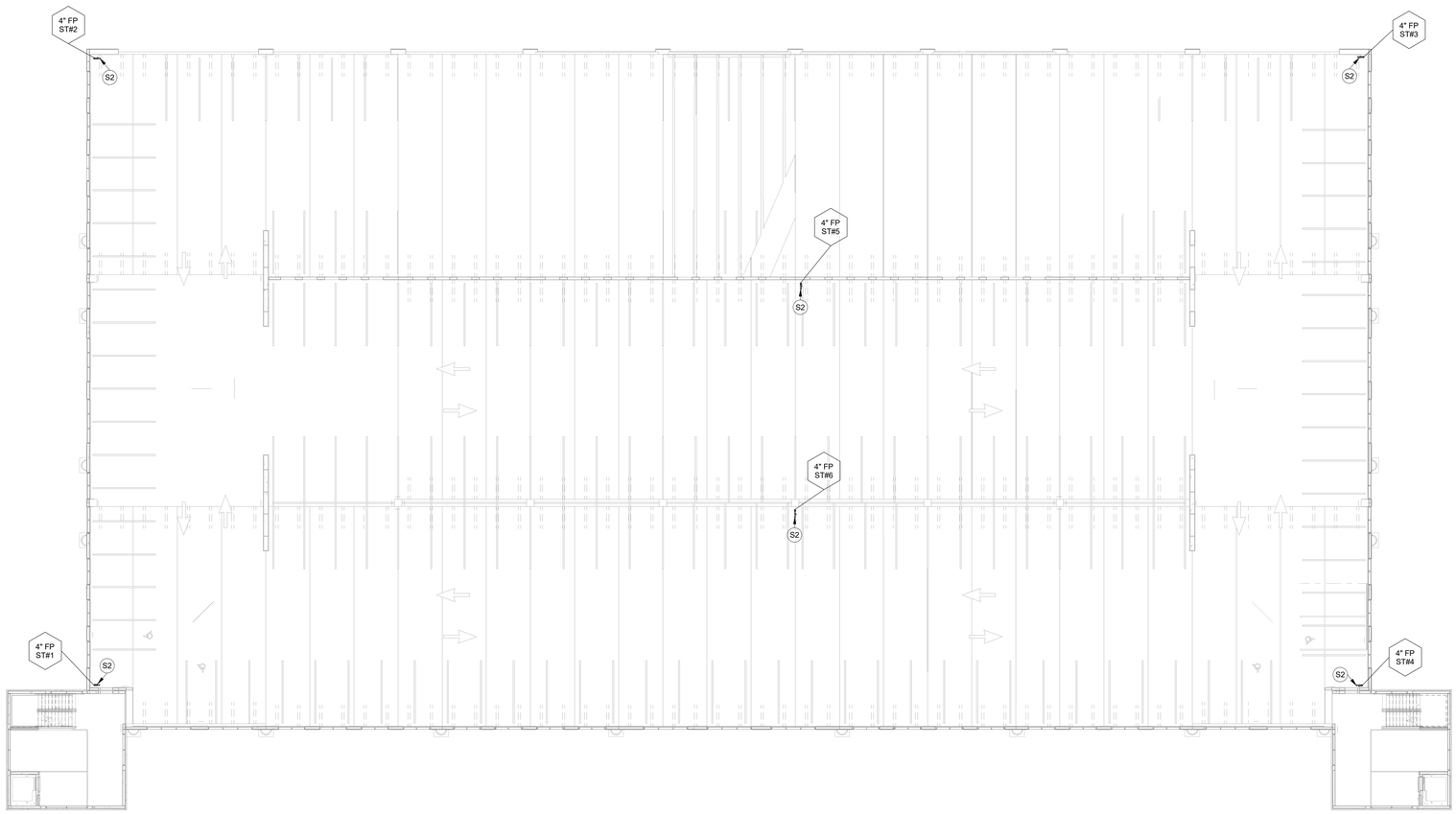

1 SECOND LEVEL - FIRE PROTECTION PLAN
1/16" = 1'-0"

1/8" = 1' - 0" 0 5' 10' 15' 30'

UNCW
UNIVERSITY of NORTH CAROLINA WILMINGTON
601 S COLLEGE ROAD
WILMINGTON, NORTH CAROLINA 28403

PARKING DECK II AND SURFACE PARKING (DESIGN-BUILD)
SOUTH CAMPUS - 4965 RIEGEL ROAD

SCO ID NUMBER: 18-19226-01A
CODE: 441828
ITEM: 301

CONTRACTOR
Balfour Beatty Construction

DESIGNER
CLARKNEXSEN
1523 ELIZABETH AVENUE, SUITE 300
CHARLOTTE, NORTH CAROLINA 28204
704·377·8800

CLARK NEXSEN LICENSE NUMBER: C-1028

WALKER CONSULTANTS
13860 Ballantyne Corporate Place
Suite 140
Charlotte, NC 28277
T: 704.247.6230
www.walkerconsultants.com
NC License No. F-0518

McKIM&CREED
CIVIL ENGINEER
243 NORTH FRONT STREET
WILMINGTON, NORTH CAROLINA
28401
910.343.1048

PROFESSIONAL SEAL
CLARK NEXSEN CERT NO. 50680 NORTH CAROLINA
NORTH CAROLINA PROFESSIONAL SEAL 023940 ENGINEER ANTHONY W. BRANDON
NOT FOR CONSTRUCTION
NC CORPORATE ENGINEERING LICENSE #C-1028

SUBMITTAL
04/15/19
CONSTRUCTION DOCUMENT SUBMITTAL 01

REVISIONS

KEY PLAN

SHEET
SECOND LEVEL - FIRE PROTECTION PLAN

FP102

DESIGN: AWB
DRAWN: AWB
REVIEW: CN

CN 8112

4/15/2019 2:07:02 PM
C:\Revit Projects\8112-UNCW Parking Deck II - P17_ABRANDON@CLARKNEXSEN.COM.rvt

FIRE PROTECTION KEYED NOTES	
NO.	DESCRIPTION
S2	2-1/2" FIRE DEPARTMENT HOSE VALVE MOUNTED EXPOSED. THE VALVE SHALL BE PROVIDED WITH A 2-1/2" CAP AND CHAIN. SPANNER LUGS. PROVIDE A 2-1/2" NIPPLE BETWEEN THE VERTICAL RISER AND VALVE CONNECTION. THREADS SHALL MATCH THE WILMINGTON FIRE DEPARTMENT STANDARD.

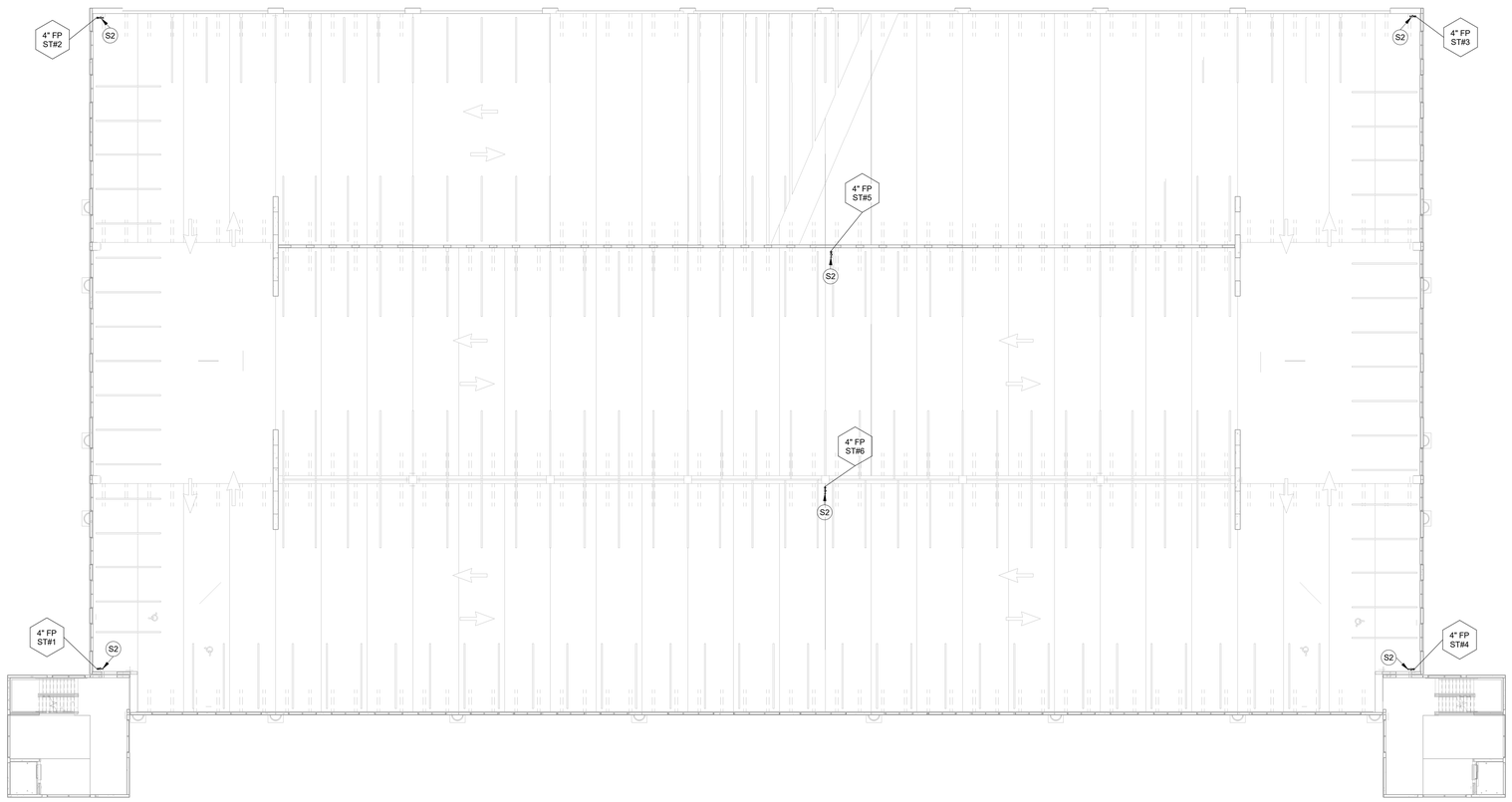

1 THIRD LEVEL - FIRE PROTECTION
1/16" = 1'-0"

1/8" = 1' - 0" 0 5' 10' 15' 30'

UNCW
UNIVERSITY of NORTH CAROLINA WILMINGTON
601 S COLLEGE ROAD
WILMINGTON, NORTH CAROLINA 28403

PARKING DECK II AND SURFACE PARKING (DESIGN-BUILD)
SOUTH CAMPUS - 4965 RIEGEL ROAD

SCO ID NUMBER: 18-19226-01A
CODE: 441828
ITEM: 301

CONTRACTOR
Balfour Beatty Construction

DESIGNER
CLARKNEXSEN
1523 ELIZABETH AVENUE, SUITE 300
CHARLOTTE, NORTH CAROLINA 28204
704·377·8800

CLARK NEXSEN LICENSE NUMBER: C-1028

WALKER CONSULTANTS
13860 Ballantyne Corporate Place
Suite 140
Charlotte, NC 28277
T: 704.247.6230
www.walkerconsultants.com
NC License No. F-0518

McKIM&CREED
CIVIL ENGINEER
243 NORTH FRONT STREET
WILMINGTON, NORTH CAROLINA
28401
910.343.1048

PROFESSIONAL SEAL
CLARK NEXSEN CERT NO. 50680 NORTH CAROLINA
NORTH CAROLINA PROFESSIONAL SEAL 023940 ENGINEER ANTHONY WRANDON
NOT FOR CONSTRUCTION
NC CORPORATE ENGINEERING LICENSE #C-1028

SUBMITTAL
04/15/19
CONSTRUCTION DOCUMENT SUBMITTAL 01

REVISIONS

KEY PLAN

SHEET
THIRD LEVEL - FIRE PROTECTION PLAN

FP103

DESIGN: AWB
DRAWN: AWB
REVIEW: CN

CN 8112

4/15/2019 2:07:57 PM
C:\Revit Projects\8112-UNCW Parking Deck II - P17_ABRANDON@CLARKNEXSEN.COM.rvt

FIRE PROTECTION KEYED NOTES	
NO.	DESCRIPTION
S2	2-1/2" FIRE DEPARTMENT HOSE VALVE MOUNTED EXPOSED. THE VALVE SHALL BE PROVIDED WITH A 2-1/2" CAP AND CHAIN. SPANNER LUGS. PROVIDE A 2-1/2" NIPPLE BETWEEN THE VERTICAL RISER AND VALVE CONNECTION. THREADS SHALL MATCH THE WILMINGTON FIRE DEPARTMENT STANDARD.

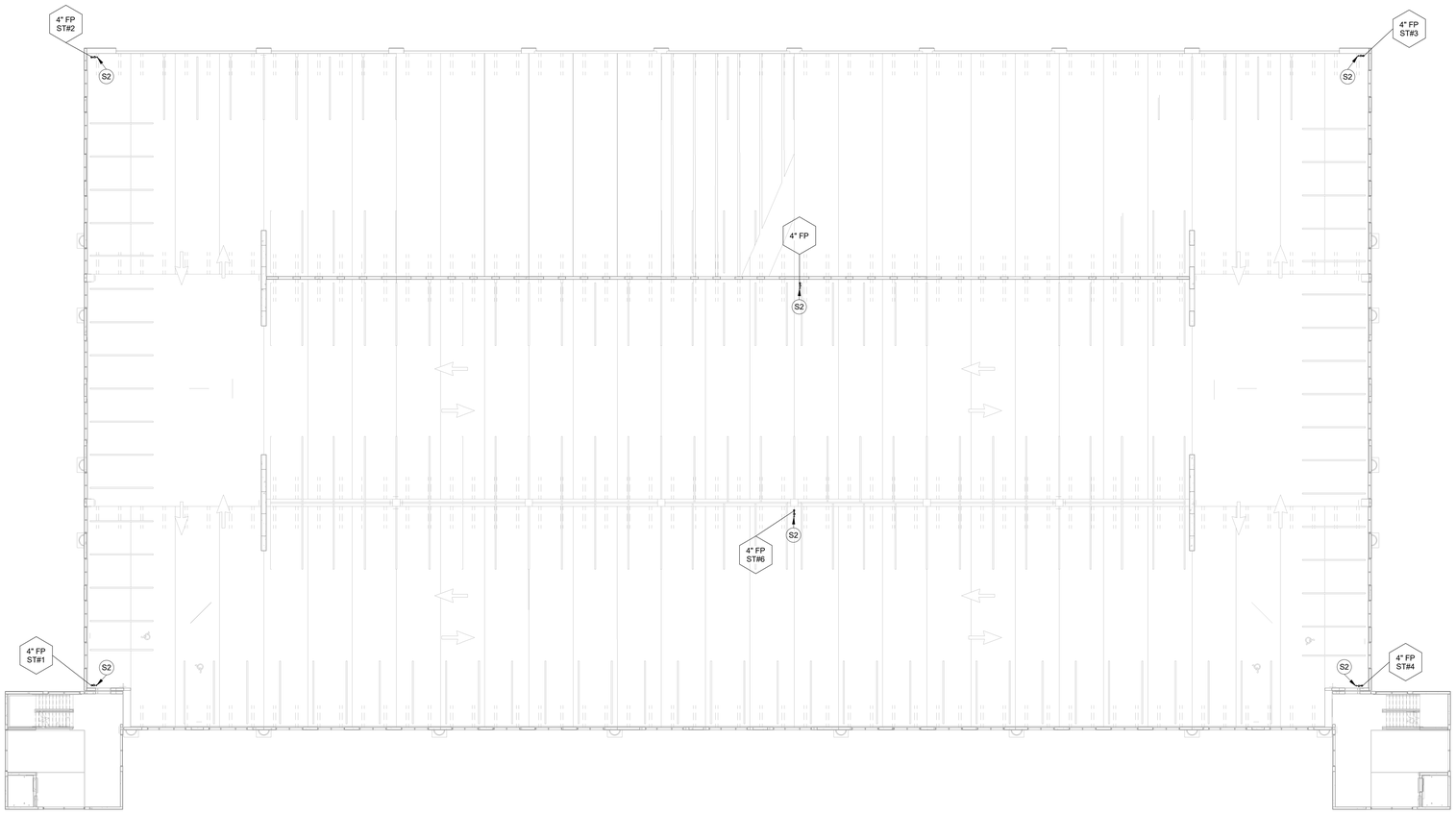

1 FOURTH LEVEL - FIRE PROTECTION
1/16" = 1'-0"

1/8" = 1' - 0" 0 5' 10' 15' 30'

UNCW
UNIVERSITY of NORTH CAROLINA WILMINGTON
601 S COLLEGE ROAD
WILMINGTON, NORTH CAROLINA 28403

PARKING DECK II AND SURFACE PARKING (DESIGN-BUILD)
SOUTH CAMPUS - 4965 RIEGEL ROAD

SCO ID NUMBER: 18-19226-01A
CODE: 441828
ITEM: 301

CONTRACTOR
Balfour Beatty Construction

DESIGNER
CLARKNEXSEN
1523 ELIZABETH AVENUE, SUITE 300
CHARLOTTE, NORTH CAROLINA 28204
704·377·8800

CLARK NEXSEN LICENSE NUMBER: C-1028

WALKER CONSULTANTS
13860 Ballantyne Corporate Place
Suite 140
Charlotte, NC 28277
T: 704.247.6230
www.walkerconsultants.com
NC License No. F-0518

McKIM&CREED
CIVIL ENGINEER
243 NORTH FRONT STREET
WILMINGTON, NORTH CAROLINA
28401
910.343.1048

PROFESSIONAL SEAL
NOT FOR CONSTRUCTION
CLARK NEXSEN CERT NO. 50680 NORTH CAROLINA
NORTH CAROLINA PROFESSIONAL SEAL 023940 ENGINEER ANTHONY WAYNE BRANDON
NC CORPORATE ENGINEERING LICENSE #C-1028

SUBMITTAL
04/15/19
CONSTRUCTION DOCUMENT SUBMITTAL 01

REVISIONS

KEY PLAN

SHEET
FOURTH LEVEL - FIRE PROTECTION PLAN

FP104

DESIGN: AWB
DRAWN: AWB
REVIEW: CN

CN 8112

4/15/2019 2:08:02 PM
C:\Revit Projects\8112-UNCW Parking Deck II - P-17_ABRANDON@CLARKNEXSEN.COM.rvt

FIRE PROTECTION KEYED NOTES	
NO.	DESCRIPTION
S2	2-1/2" FIRE DEPARTMENT HOSE VALVE MOUNTED EXPOSED. THE VALVE SHALL BE PROVIDED WITH A 2-1/2" CAP AND CHAIN. SPANNER LUGS. PROVIDE A 2-1/2" NIPPLE BETWEEN THE VERTICAL RISER AND VALVE CONNECTION. THREADS SHALL MATCH THE WILMINGTON FIRE DEPARTMENT STANDARD.

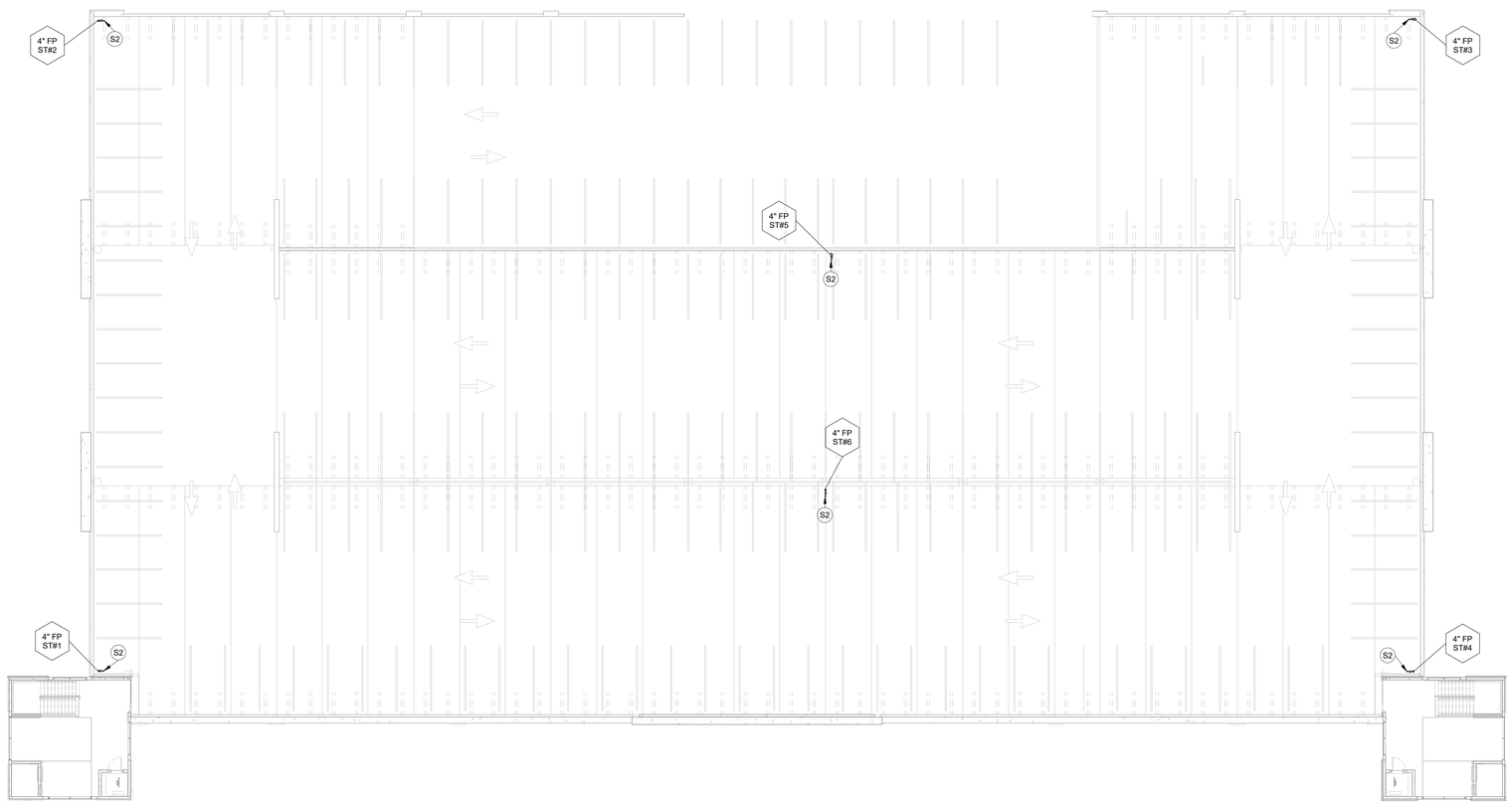

1 FIFTH LEVEL - FIRE PROTECTION
1/16" = 1'-0"

1/8" = 1' - 0" 0 5' 10' 15' 30'

UNCW
UNIVERSITY of NORTH CAROLINA WILMINGTON
601 S COLLEGE ROAD
WILMINGTON, NORTH CAROLINA 28403

PARKING DECK II AND SURFACE PARKING (DESIGN-BUILD)
SOUTH CAMPUS - 4965 RIEGEL ROAD

SCO ID NUMBER: 18-19226-01A
CODE: 441828
ITEM: 301

CONTRACTOR
Balfour Beatty Construction

DESIGNER
CLARKNEXSEN
1523 ELIZABETH AVENUE, SUITE 300
CHARLOTTE, NORTH CAROLINA 28204
704·377·8800

CLARK NEXSEN LICENSE NUMBER: C-1028

WALKER CONSULTANTS
13860 Ballantyne Corporate Place
Suite 140
Charlotte, NC 28277
T: 704.247.6230
www.walkerconsultants.com
NC License No. F-0518

McKIM&CREED
CIVIL ENGINEER
243 NORTH FRONT STREET
WILMINGTON, NORTH CAROLINA
28401
910.343.1048

PROFESSIONAL SEAL
CLARK NEXSEN CERT NO. 50680 NORTH CAROLINA
NORTH CAROLINA PROFESSIONAL SEAL 023940 ENGINEER BRANDON WAYNE BRADDOCK
NOT FOR CONSTRUCTION
NC CORPORATE ENGINEERING LICENSE #C-1028

SUBMITTAL
04/15/19
CONSTRUCTION DOCUMENT SUBMITTAL 01

REVISIONS

KEY PLAN

SHEET
FIFTH LEVEL - FIRE PROTECTION PLAN

FP105

DESIGN: AWB
DRAWN: AWB
REVIEW: CN

CN 8112

4/15/2019 2:08:09 PM
C:\Revit Projects\8112-UNCW Parking Deck II - P17_ABRANDON@CLARKNEXSEN.COM.rvt

FIRE PROTECTION KEYED NOTES	
NO.	DESCRIPTION
S2	2-1/2" FIRE DEPARTMENT HOSE VALVE MOUNTED EXPOSED. THE VALVE SHALL BE PROVIDED WITH A 2-1/2" CAP AND CHAIN. SPANNER LUGS. PROVIDE A 2-1/2" NIPPLE BETWEEN THE VERTICAL RISER AND VALVE CONNECTION. THREADS SHALL MATCH THE WILMINGTON FIRE DEPARTMENT STANDARD.
STZ	6" x 6" RIGID NPT STORZ CONNECTION, WALL MOUNTED 30 DEGREE DOWN TURN ANGLE, FORGED ALUMINUM CONSTRUCTION, NITRILE GASKETS, 250 PSI RATED, CAP AND CHAIN, POLISHED CHROME FINISH, AMERICAN FIRE HOSE & CABINET MODEL SZ4X630KR OR EQUIVALENT BY GUARDIAN OR POTTER ROEMER.
TS	TAMPER SWITCH. THE TAMPER TAMPER SWITCH SHALL BE ELECTRICALLY SUPERVISED WITH THE BUILDING FIRE ALARM SYSTEM.

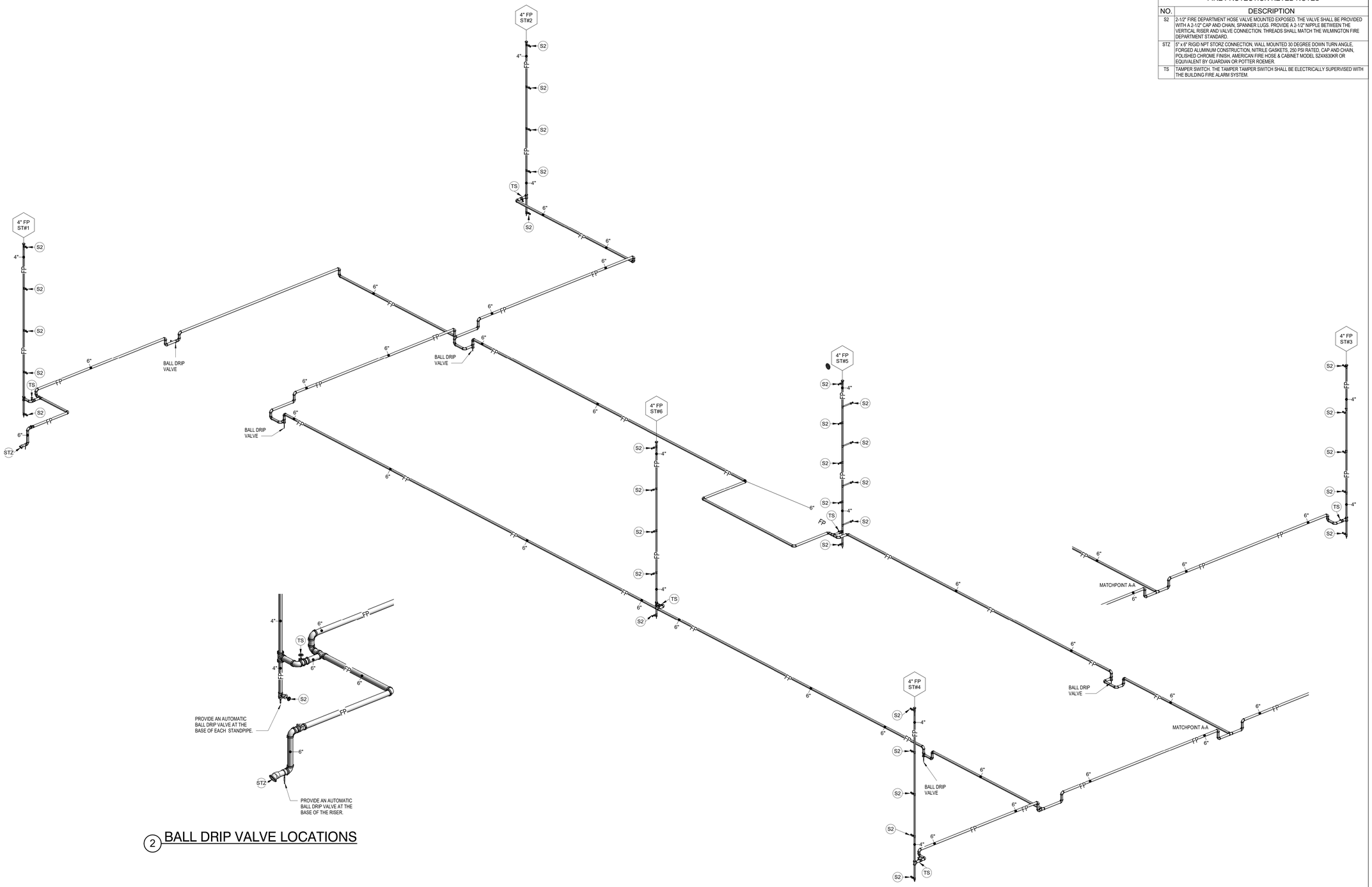

1 FIRE PROTECTION PIPING ISOMETRIC
NO SCALE

2 BALL DRIP VALVE LOCATIONS

UNCW
UNIVERSITY of NORTH CAROLINA WILMINGTON
601 S COLLEGE ROAD
WILMINGTON, NORTH CAROLINA 28403

PARKING DECK II AND SURFACE PARKING (DESIGN-BUILD)
SOUTH CAMPUS - 4965 RIEGEL ROAD

SCO ID NUMBER: 18-19226-01A
CODE: 441828
ITEM: 301

CONTRACTOR
Balfour Beatty Construction

DESIGNER
CLARKNEXSEN
1523 ELIZABETH AVENUE, SUITE 300
CHARLOTTE, NORTH CAROLINA 28204
704·377·8800

CLARK NEXSEN LICENSE NUMBER: C-1028

WALKER CONSULTANTS
13860 Ballantyne Corporate Place
Suite 140
Charlotte, NC 28277
T: 704.247.6230
www.walkerconsultants.com
NC License No. F-0518

McKIM&CREED
CIVIL ENGINEER
243 NORTH FRONT STREET
WILMINGTON, NORTH CAROLINA
28401
910.343.1048

PROFESSIONAL SEAL
CLARK NEXSEN NORTH CAROLINA CERT. NO. 50680
NORTH CAROLINA PROFESSIONAL SEAL 023940 ENGINEER
NOT FOR CONSTRUCTION
NC CORPORATE ENGINEERING LICENSE #C-1028

SUBMITTAL
04/15/19
CONSTRUCTION DOCUMENT SUBMITTAL 01

REVISIONS

KEY PLAN

SHEET
FIRE PROTECTION PIPING ISOMETRIC

FP201

DESIGN: AWB
DRAWN: AWB
REVIEW: CN

CN 8112

4/15/2019 2:08:13 PM
C:\Revit Projects\8112-UNCW Parking Deck II - P17_ABRANDON@CLARKNEXSEN.COM.rvt

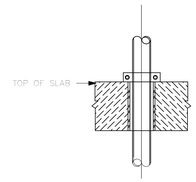

ELEVATION OF MULTIPLE SUPPORT FOR PIPE PASSING THROUGH SLAB.

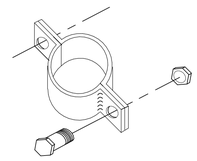

INDIVIDUAL PIPE CLAMP SUPPORT

6 VERTICAL PIPE SUPPORT DETAIL
NO SCALE

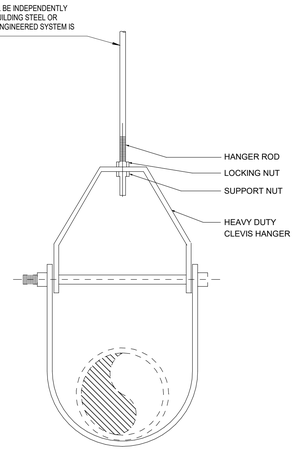

MAXIMUM PIPE SUPPORT SPACING			
	HORIZONTAL		VERTICAL
PIPE SIZE	1" AND SMALLER / 1 1/4"	1 1/2" AND LARGER	ALL PIPE SIZES
COPPER PIPING	6 FT	10 FT	10 FT
PIPE SIZE	ALL PIPE SIZES		ALL PIPE SIZES
CAST IRON PIPING	5 FT. (10 FT WHERE 10 FOOT LENGTH OF PIPE ARE USED)		15 FT
PIPE SIZE	ALL PIPE SIZES		ALL PIPE SIZES
STEEL PIPING	12 FT		15 FT

NOTE: FOR TRAPEZE HANGER TAKE SPACING OF SMALLEST PIPE ON TRAPEZE.

4 CLEVIS HANGER DETAIL
NO SCALE

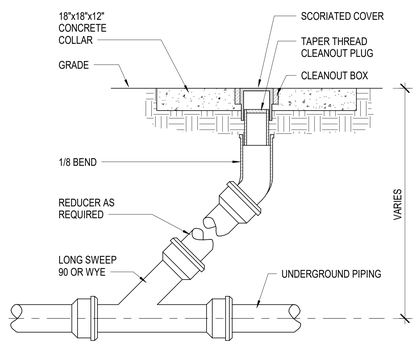

5 YARD CLEANOUT DETAIL (C.O.T.G)
NO SCALE

PLUMBING / MECHANICAL LEGEND	
SYMBOL	DESCRIPTION
FM	FORCED MAIN
STM	STORM DRAINAGE
ORD	OVERFLOW ROOF DRAINAGE
CW	COLD WATER
D	CONDENSATE DRAIN
	FLOW ARROW
	VALVE IN RISER
	BALL VALVE
	CHECK VALVE
	STRAINER
	WATER PRESSURE REGULATOR
WCO	WALL CLEANOUT
FCO	FLOOR CLEANOUT
C.O.T.G.	CLEANOUT TO GRADE
	INVERT ELEVATION
8" / STM	PIPE SIZE / PIPE SYSTEM ABBREVATION — UTILITY RISER DESIGNATION

PLUMBING GENERAL NOTES	
No.	DESCRIPTION
1	NO BURIED PIPING UNDER THE SLAB SHALL BE INSTALLED WITHIN THE FOOTING BEARING
2	CUTTING OF OPENINGS IN EXISTING CONSTRUCTION ASSOCIATED WITH THE PIPING SYSTEMS SHALL BE PROVIDED BY THE PLUMBING CONTRACTOR.
3	ALL BURIED PRESSURE PIPING INSTALLED SHALL BE A MINIMUM OF 36" BELOW FINISHED GRADE TO TOP OF PIPE.
4	THE ISOMETRIC IS SCHEMATIC IN NATURE AND PROVIDED FOR GENERAL ROUTING AND CLARIFICATION THE ISOMETRIC SHALL NOT BE USED FOR A SPECIFIC ESTIMATE TAKE-OFF OF PIPE LENGTHS AND FITTINGS.
5	THE PLUMBING CONTRACTOR'S WORK SHALL BE COORDINATED IN SUCH A MANNER AS TO NEVER BLOCK SERVICE PATHWAYS TO AND FROM ANY BUILDING AND TO MINIMIZE INTERFERENCE WITH SITE ACCESSIBILITY.
6	THE PLUMBING CONTRACTOR IS REQUIRED TO PROVIDE 3" MINIMUM DURABLE PRINTED PLASTIC WARNING TAPE FOR EXTERIOR METALLIC PIPING WITHIN THE SCOPE OF HIS CONTRACT. THE WARNING TAPE SHALL BE IDENTIFIED FOR THE SPECIFIC UTILITY
7	THE PLUMBING CONTRACTOR IS REQUIRED TO PROVIDE 2" MINIMUM DETECTABLE TRACER WIRE FOR EXTERIOR NON-METALLIC PIPING DISTRIBUTION WITHIN THE SCOPE OF HIS CONTRACT. THE TRACER WIRE SHALL BE IDENTIFIED FOR THE SPECIFIC UTILITY.
8	THE CONTRACTOR SHALL PROVIDE DAILY CLEAN-UP OF DEBRIS ASSOCIATED WITH THIS SCOPE OF WORK.
9	THE PLUMBING CONTRACTOR'S WORK SHALL BE COORDINATED IN SUCH A MANNER AS TO NEVER BLOCK SERVICE PATHWAYS TO AND FROM THIS BUILDING.
10	THE OMISSION OF OR THE INCLUSION OF UTILITY LOCATIONS ON THE PLANS ARE NOT TO BE CONSIDERED AS THE NON-EXISTENCE OF UTILITIES OR A DEFINITE EXISTENCE OF UTILITIES.
11	CONTRACTOR ASSUMES ALL RESPONSIBLITY FOR LOCATION AND PROTECTING UTLITIES PRIOR TO CONSTRUCTION.
12	ANY DAMAGES SHALL BE REPAIRED AT THE CONTRACTOR'S EXPENSE.
13	CONTRACTOR TO COORDINATE ANY PROBLEMS OR FIELD CONDITIONS THAT MAY CHANGE DESIGN WITH THE OWNER AND ENGINEER PRIOR TO PROCEEDING.
14	THE STOCKPILING OF EXCESS MATERIAL ON SITE WILL NOT BE ALLOWED.
15	ALL WORK SHALL BE ACCOMPLISHED IN ACCORDANCE WITH ALL LOCAL, STATE, AND FEDERAL CODES OR ORDINANCES.
16	REFER TO DETAIL 3/S-550 FOR VERTICAL PIPING PROTECTION DETAILS.
17	PROVIDE CLEANOUTS AT THE BASE OF ALL STORM RISERS.

PARKING DRAIN SCHEDULE				
Symbol	Description	Model	Manuf.	Comments
3"PD-2	9 INCH DIAMETER HEAVY DUTY PARKING DECK DRAIN WITH SUPPORT FLANGE	Z533-NL	ZURN	NEO LOC OUTLET, DURA-COATED CAST IRON BODY WITH BOTTOM OUTLET, 16 SQ.IN. GRATE FREE AREA
4"PD-2	9 INCH DIAMETER HEAVY DUTY PARKING DECK DRAIN WITH SUPPORT FLANGE	Z533-NL	ZURN	NEO LOC OUTLET, DURA-COATED CAST IRON BODY WITH BOTTOM OUTLET, 16 SQ.IN. GRATE FREE AREA
6"PD-1	15 INCH DIAMETER HEAVY DUTY PARKING DECK DRAIN WITH SUPPORT FLANGE	Z536-NL	ZURN	NEO LOC OUTLET, DURA-COATED CAST IRON BODY WITH BOTTOM OUTLET, 56 SQ.IN. GRATE FREE AREA
8"DPD-1	16 INCH DIAMETER HEAVY DUTY PARKING DECK DRAIN WITH SUPPORT FLANGE	Z537-NL	ZURN	NEO LOC OUTLET, DURA-COATED CAST IRON BODY WITH BOTTOM OUTLET, 79 SQ.IN. GRATE FREE AREA
8"PD-1	16 INCH DIAMETER HEAVY DUTY PARKING DECK DRAIN WITH SUPPORT FLANGE	Z537-NL	ZURN	NEO LOC OUTLET, DURA-COATED CAST IRON BODY WITH BOTTOM OUTLET, 79 SQ.IN. GRATE FREE AREA

NOTE: THE BASIS OF DESIGN MANUFACTURER IS ZURN OR EQUIVALENT BY JR SMITH OR JOSAM.

FUNNEL DRAIN SCHEDULE				
Symbol	Description	Model	Manuf.	Comments
3"FD-1	FIXED AIR GAP FUNNEL DRAIN	Z1025 - 3	Zurn Industries	

NOTE: THE BASIS OF DESIGN MANUFACTURER IS ZURN OR EQUIVALENT BY JR SMITH OR JOSAM.

PLUMBING BACKFLOW PREVENTER SCHEDULE				
Symbol	Description	Zurn Model	Rated Flow	Pressure Drop At Rated Flow
2"RPBP-1	Lead-Free* RP Reduced Pressure Principle Assembly	375XL	160 GPM	15 PSI

NOTE: THE BASIS OF DESIGN MANUFACTURER IS ZURN OR EQUIVALENT BY WATTS OR FEBCO.

SUMP PUMP SCHEDULE									
SYMBOL	Description	GPM	Head	Model	Manufacturer	HP	Phase	Voltage	Comments
SP-1	ELEVATOR SUMP PUMP	50	20	N153	ZOELLER	.5	1	120	PROVIDED WITH ZOELLER CONTROL PANEL WITH DRY CONTACTS FOR SYSTEM ALARM
SP-2	ELEVATOR SUMP PUMP	50	20	N153	ZOELLER	.5	1	120	PROVIDED WITH ZOELLER CONTROL PANEL WITH DRY CONTACTS FOR SYSTEM ALARM

NOTE: THE BASIS OF DESIGN MANUFACTURER IS ZOELLER OR EQUIVALENT BY STANCOR OR GOULDS.

PLUMBING SPECIALTIES SCHEDULE			
MARK	DESCRIPTION	SIZE	MANUFACTURER/MODEL/DESCRIPTION
FCO	FLOOR TYPE CLEANOUT	REFER TO DRAWINGS	ZURN ZN1402 FOR CONCRETE FLOORS, CAST IRON HEAVY DUTY WITH ROUND ADJUSTABLE RECESSED NICKEL-BRONZE TOP AND TAPER- THREAD BRONZE PLUG
WCO	WALL TYPE CLEANOUT	REFER TO DRAWINGS	ZURN Z1441-BP OR Z1446-BP CAST BRONZE TAPER-THREAD PLUG W/ STAINLESS STEEL COVER.

ELECTRICAL NOTES	
NO.	DESCRIPTION
1	EQUIPMENT OF TRADES OTHER THAN ELECTRICAL.
2	CONDUIT AND WIRING BY HVAC, PLUMBING CONTRACTOR OR OTHER TRADES.
3	IF AN ADDITIONAL DISCONNECT IS REQUIRED BY NEW, IT SHALL BE PROVIDED AND INSTALLED BY THE EQUIPMENT CONTRACTOR.
4	JUNCTION BOX MAY BE SHOWN ON ELECTRICAL PLANS FOR SOME EQUIPMENT. IF NO STARTER OR DISCONNECT IS SUPPLIED. A JUNCTION BOX SHALL BE INSTALLED ADJACENT TO EQUIPMENT. THE ELECTRICAL CONTRACTOR SHALL PROVIDE LINE SIDE WIRING TO THE JUNCTION BOX. LOAD SIDE WIRING WILL BE PROVIDED BY MECHANICAL CONTRACTOR OR OTHER TRADES.
5	FEEDER CIRCUIT WIRING AND CONDUIT IN ELECTRICAL WORK. SEE PANEL BOARD SCHEDULES FOR WIRE AND BREAKER SIZES.

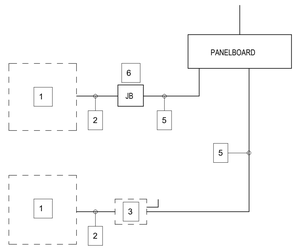

3 ELECTRICAL CONNECTION DIVISION OF WORK
NO SCALE

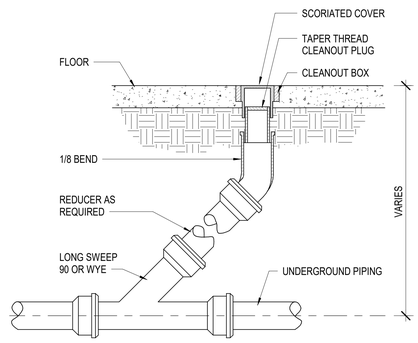

2 FLOOR CLEANOUT DETAIL
NO SCALE

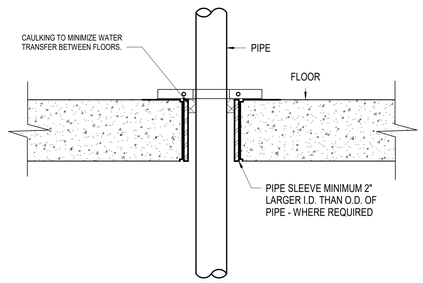

1 PIPE FLOOR PENETRATION
NO SCALE

UNCW
UNIVERSITY of NORTH CAROLINA WILMINGTON
601 S COLLEGE ROAD
WILMINGTON, NORTH CAROLINA 28403

PARKING DECK II AND SURFACE PARKING (DESIGN-BUILD)
SOUTH CAMPUS - 4965 RIEGEL ROAD

SCO ID NUMBER: 18-19226-01A
CODE: 441828
ITEM: 301

CONTRACTOR
Balfour Beatty Construction

DESIGNER
CLARKNEXSEN
1523 ELIZABETH AVENUE, SUITE 300
CHARLOTTE, NORTH CAROLINA 28204
704·377·8800
CLARK NEXSEN LICENSE NUMBER: C-1028

WALKER CONSULTANTS
13860 Ballantyne Corporate Place
Suite 140
Charlotte, NC 28277
T: 704.247.6230
www.walkerconsultants.com
NC License No. F-0518

McKIM&CREED
CIVIL ENGINEER
243 NORTH FRONT STREET
WILMINGTON, NORTH CAROLINA
28401
910.343.1048

PROFESSIONAL SEAL

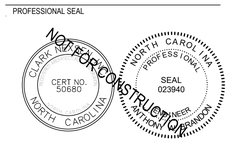

NC CORPORATE ENGINEERING LICENSE #C-1028

SUBMITTAL
04/15/19
CONSTRUCTION DOCUMENT SUBMITTAL 01

REVISIONS

KEY PLAN

SHEET
PLUMBING LEGEND, SCHEDULES AND DETAILS

P001

DESIGN: AWB
DRAWN: AWB
REVIEW: CN

CN 8112

4/15/2019 2:10:28 PM
C:\Revit Projects\8112-UNCW Parking Deck II - P17_ABRANDON@CLARKNEXSEN.COM.rvt

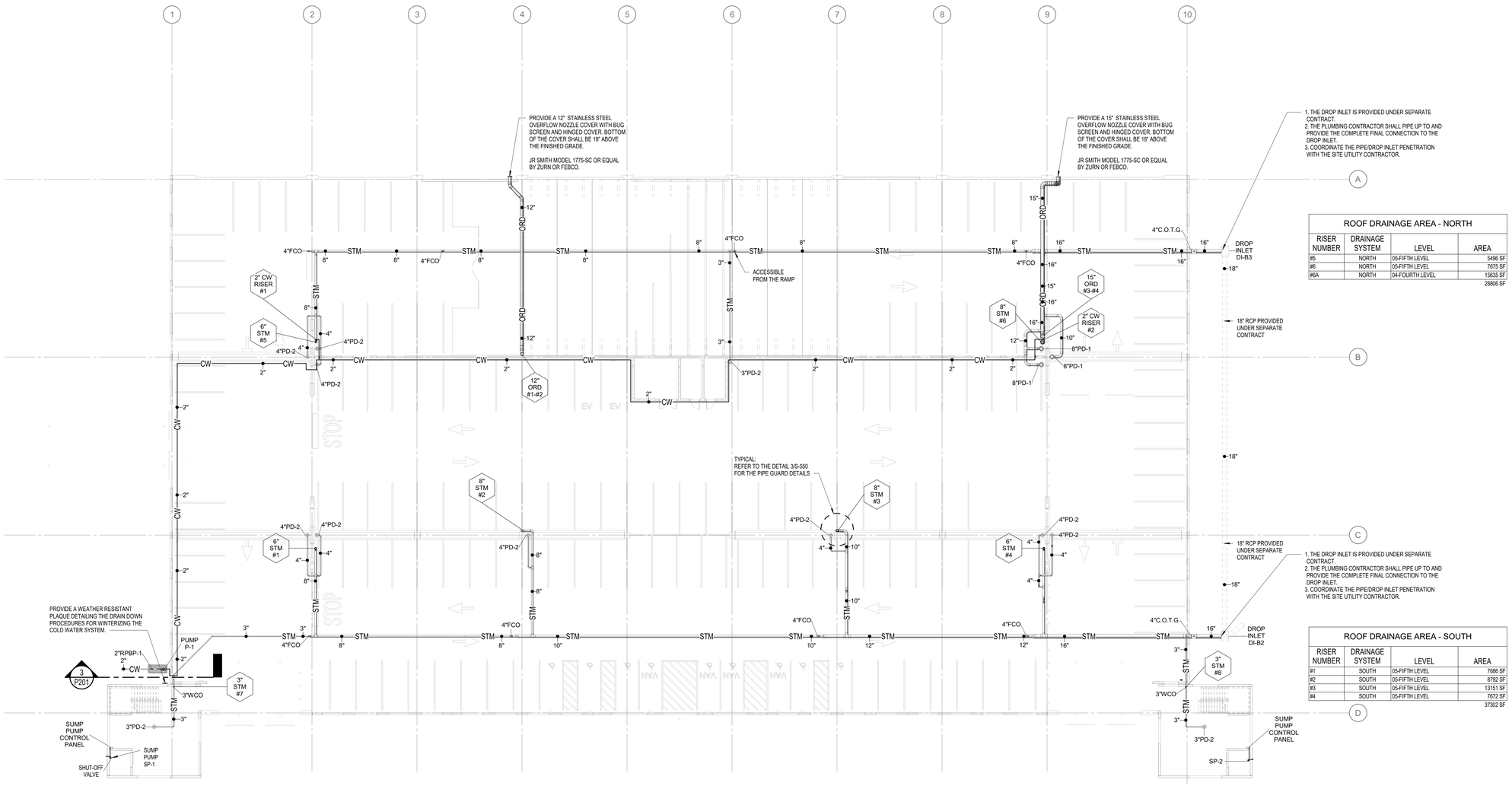

ROOF DRAINAGE AREA - NORTH			
RISER NUMBER	DRAINAGE SYSTEM	LEVEL	AREA
#5	NORTH	05-FIFTH LEVEL	5496 SF
#6	NORTH	05-FIFTH LEVEL	7675 SF
#6A	NORTH	04-FOURTH LEVEL	15635 SF
			28806 SF

ROOF DRAINAGE AREA - SOUTH			
RISER NUMBER	DRAINAGE SYSTEM	LEVEL	AREA
#1	SOUTH	05-FIFTH LEVEL	7686 SF
#2	SOUTH	05-FIFTH LEVEL	8782 SF
#3	SOUTH	05-FIFTH LEVEL	13151 SF
#4	SOUTH	05-FIFTH LEVEL	7672 SF
			37302 SF

1 FIRST LEVEL - PLUMBING PLAN

1/16" = 1'-0"

1/8" = 1' - 0" 0 5' 10' 15' 30'

ALTERNATE 3: DOMESTIC WATER

3a: ADD DOMESTIC WATER SOURCE FROM THE SOUTHWEST SITE NEW FIRE HYDRANT TO THE WEST SIDE OF THE DECK WITH A 2" REDUCED PRESSURE BACKFLOW PREVENTER, HOTBOX, DOMESTIC WATER BOOSTER PUMP AND 2" DOMESTIC WATER MAIN STUBBED INTO THE DECK.

3b: PROVIDE 2" PIPING AND TWO (2) HOSE CONNECTIONS ON LEVELS 1 THROUGH 5 AT EACH END OF RAMP.

UNCW
UNIVERSITY of NORTH CAROLINA WILMINGTON
601 S COLLEGE ROAD
WILMINGTON, NORTH CAROLINA 28403

PARKING DECK II AND SURFACE PARKING (DESIGN-BUILD)
SOUTH CAMPUS - 4965 RIEGEL ROAD

SCO ID NUMBER: 18-19226-01A
CODE: 441828
ITEM: 301

CONTRACTOR
Balfour Beatty Construction

DESIGNER

CLARKNEXSEN
1523 ELIZABETH AVENUE, SUITE 300
CHARLOTTE, NORTH CAROLINA 28204
704·377·8800
CLARK NEXSEN LICENSE NUMBER: C-1028

WALKER CONSULTANTS
13860 Ballantyne Corporate Place
Suite 140
Charlotte, NC 28277
T: 704.247.6230
www.walkerconsultants.com
NC License No. F-0518

McKIM&CREED
CIVIL ENGINEER
243 NORTH FRONT STREET
WILMINGTON, NORTH CAROLINA
28401
910.343.1048

PROFESSIONAL SEAL

NOT FOR CONSTRUCTION
CLARK NEXSEN CERT NO. 50680 NORTH CAROLINA
NORTH CAROLINA PROFESSIONAL SEAL 023940 ENGINEER BRANDON WHITMORE

NC CORPORATE ENGINEERING LICENSE #C-1028

SUBMITTAL
04/15/19
CONSTRUCTION DOCUMENT SUBMITTAL 01

REVISIONS

KEY PLAN

SHEET
FIRST LEVEL - PLUMBING PLAN

P101

DESIGN: AWB
DRAWN: AWB
REVIEW: CN

CN 8112

4/15/2019 2:10:33 PM
C:\Revit Projects\8112-UNCW Parking Deck II - P17_ABRANDON@CLARKNEXSEN.COM.rvt

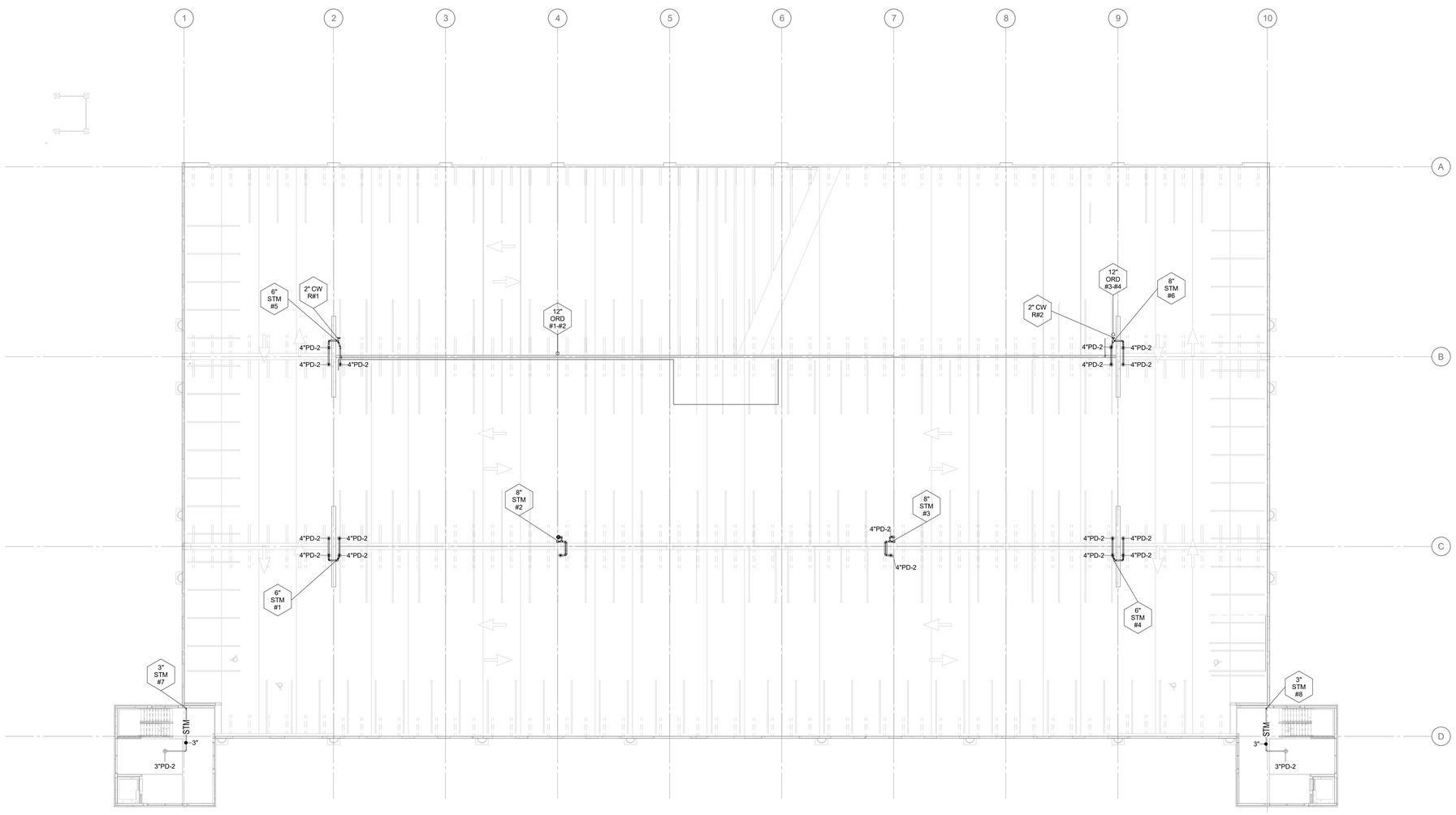

1 SECOND LEVEL - PLUMBING PLAN

1/16" = 1'-0"

1/8" = 1' - 0" 0 5' 10' 15' 30'

ALTERNATE 3: DOMESTIC WATER

3a: ADD DOMESTIC WATER SOURCE FROM THE SOUTHWEST SITE NEW FIRE HYDRANT TO THE WEST SIDE OF THE DECK WITH A 2" REDUCED PRESSURE BACKFLOW PREVENTER, HOTBOX, DOMESTIC WATER BOOSTER PUMP AND 2" DOMESTIC WATER MAIN STUBBED INTO THE DECK.

3b: PROVIDE 2" PIPING AND TWO (2) HOSE CONNECTIONS ON LEVELS 1 THROUGH 5 AT EACH END OF RAMP.

UNCW
UNIVERSITY of NORTH CAROLINA WILMINGTON
601 S COLLEGE ROAD
WILMINGTON, NORTH CAROLINA 28403

PARKING DECK II AND SURFACE PARKING (DESIGN-BUILD)
SOUTH CAMPUS - 4965 RIEGEL ROAD

SCO ID NUMBER: 18-19226-01A
CODE: 441828
ITEM: 301

CONTRACTOR
Balfour Beatty Construction

DESIGNER

CLARKNEXSEN
1523 ELIZABETH AVENUE, SUITE 300
CHARLOTTE, NORTH CAROLINA 28204
704·377·8800

CLARK NEXSEN LICENSE NUMBER: C-1028

WALKER CONSULTANTS
13860 Ballantyne Corporate Place
Suite 140
Charlotte, NC 28277
T: 704.247.6230
www.walkerconsultants.com
NC License No. F-0518

McKIM&CREED
CIVIL ENGINEER
243 NORTH FRONT STREET
WILMINGTON, NORTH CAROLINA
28401
910.343.1048

PROFESSIONAL SEAL
CLARK NEXSEN NORTH CAROLINA CERT NO. 50680
NORTH CAROLINA PROFESSIONAL SEAL 023940 ENGINEER BRANDON WOOD
NOT FOR CONSTRUCTION

NC CORPORATE ENGINEERING LICENSE #C-1028

SUBMITTAL
04/15/19
CONSTRUCTION DOCUMENT SUBMITTAL 01

REVISIONS

KEY PLAN

SHEET
SECOND LEVEL - PLUMBING PLAN

P102

DESIGN: AWB
DRAWN: AWB
REVIEW: CN

CN 8112

4/15/2019 2:10:38 PM
C:\Revit Projects\8112-UNCW Parking Deck II - P17_ABRANDON@CLARKNEXSEN.COM.rvt

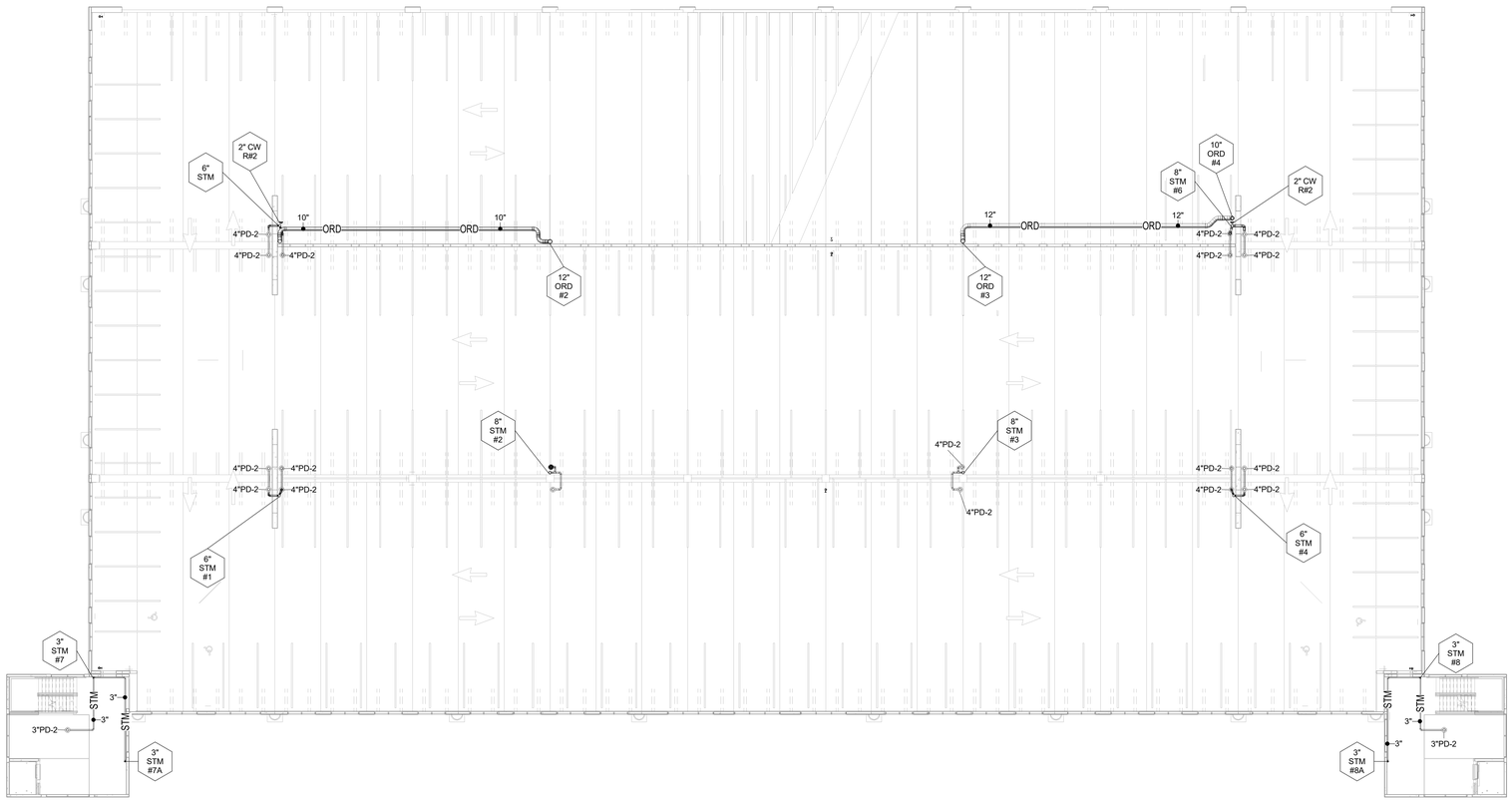

1 THIRD LEVEL - PLUMBING PLAN

1/16" = 1'-0"

1/8" = 1' - 0" 0 5' 10' 15' 30'

ALTERNATE 3: DOMESTIC WATER

3a: ADD DOMESTIC WATER SOURCE FROM THE SOUTHWEST SITE NEW FIRE HYDRANT TO THE WEST SIDE OF THE DECK WITH A 2" REDUCED PRESSURE BACKFLOW PREVENTER, HOTBOX, DOMESTIC WATER BOOSTER PUMP AND 2" DOMESTIC WATER MAIN STUBBED INTO THE DECK.

3b: PROVIDE 2" PIPING AND TWO (2) HOSE CONNECTIONS ON LEVELS 1 THROUGH 5 AT EACH END OF RAMP.

UNCW
UNIVERSITY of NORTH CAROLINA WILMINGTON
601 S COLLEGE ROAD
WILMINGTON, NORTH CAROLINA 28403

PARKING DECK II AND SURFACE PARKING (DESIGN-BUILD)
SOUTH CAMPUS - 4965 RIEGEL ROAD

SCO ID NUMBER: 18-19226-01A
CODE: 441828
ITEM: 301

CONTRACTOR
Balfour Beatty Construction

DESIGNER

CLARKNEXSEN
1523 ELIZABETH AVENUE, SUITE 300
CHARLOTTE, NORTH CAROLINA 28204
704·377·8800

CLARK NEXSEN LICENSE NUMBER: C-1028

WALKER CONSULTANTS
13860 Ballantyne Corporate Place
Suite 140
Charlotte, NC 28277
T: 704.247.6230
www.walkerconsultants.com
NC License No. F-0518

McKIM&CREED
CIVIL ENGINEER
243 NORTH FRONT STREET
WILMINGTON, NORTH CAROLINA
28401
910.343.1048

PROFESSIONAL SEAL

NOT FOR CONSTRUCTION

CLARK NEXSEN NORTH CAROLINA CERT NO. 50680

NORTH CAROLINA PROFESSIONAL SEAL 023940 ENGINEER ABRANDON

NC CORPORATE ENGINEERING LICENSE #C-1028

SUBMITTAL

04/15/19

CONSTRUCTION DOCUMENT SUBMITTAL 01

REVISIONS

KEY PLAN

SHEET

THIRD LEVEL - PLUMBING PLAN

P103

DESIGN: AWB
DRAWN: AWB
REVIEW: CN

CN 8112

4/15/2019 2:10:44 PM
C:\Revit Projects\R15-UNCW Parking Deck II - P17_ABRANDON@CLARKNEXSEN.COM.rvt

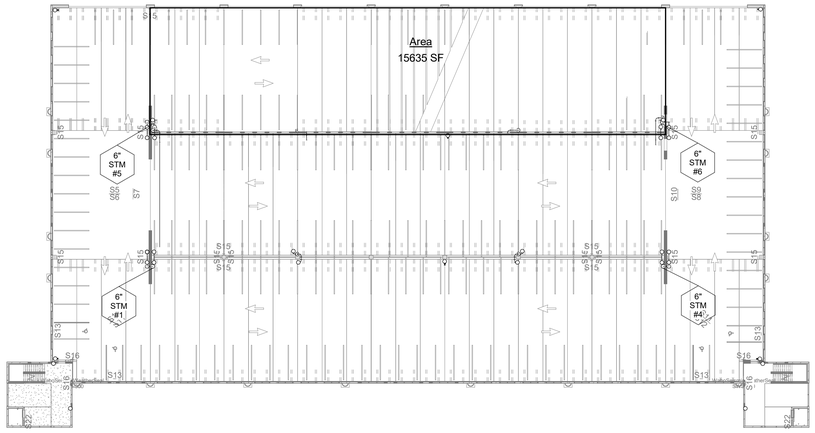

2 FOURTH LEVEL - DRAINAGE SQUARE FOOTAGE

1" = 30'-0"

ROOF DRAINAGE AREA - NORTH			
RISER NUMBER	DRAINAGE SYSTEM	LEVEL	AREA
#5	NORTH	05-FIFTH LEVEL	5496 SF
#6	NORTH	05-FIFTH LEVEL	7675 SF
#6A	NORTH	04-FOURTH LEVEL	15635 SF
			28806 SF

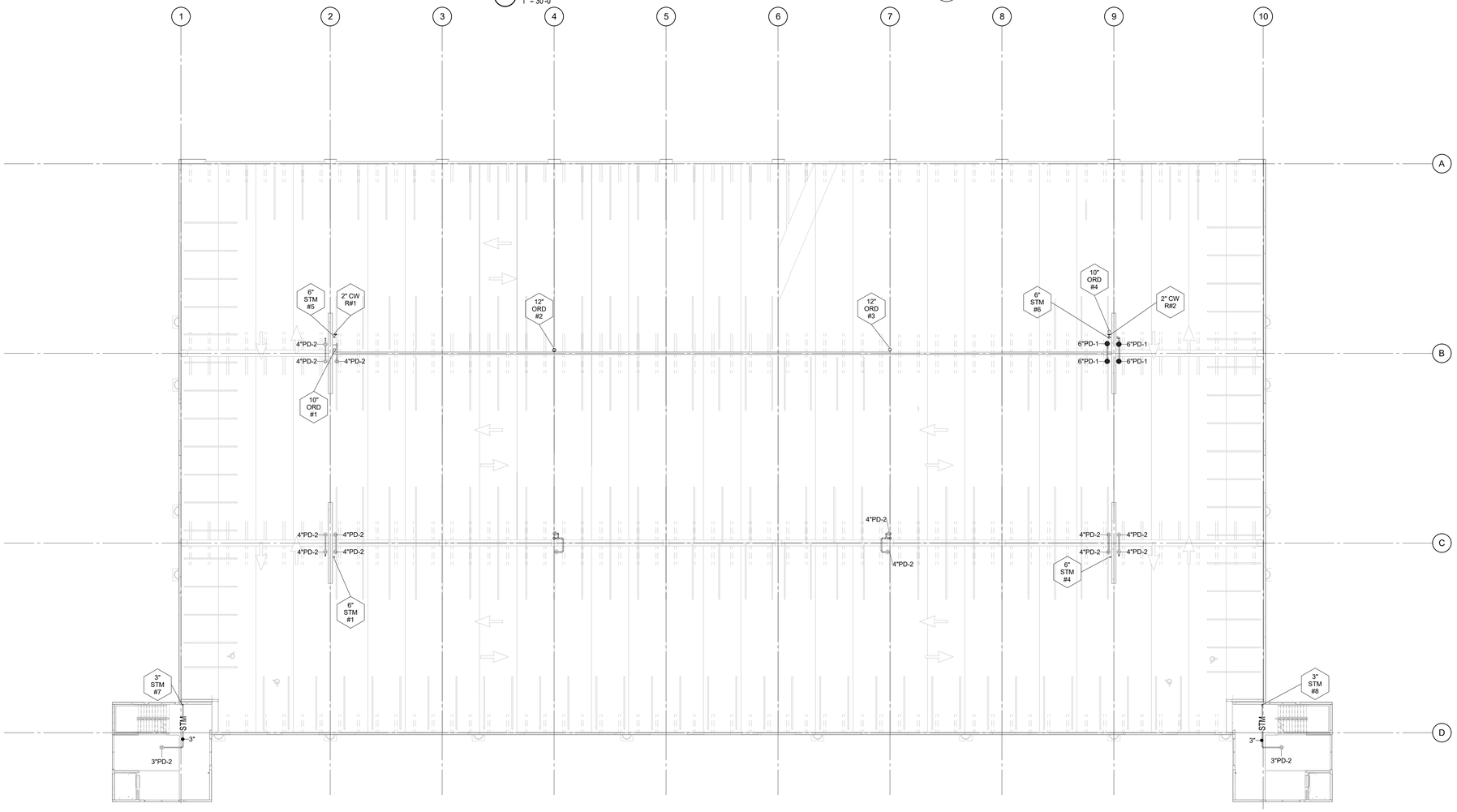

1 FOURTH LEVEL - PLUMBING PLAN

1/16" = 1'-0"

1/8" = 1' - 0" 0 5' 10' 15' 30'

ALTERNATE 3: DOMESTIC WATER

3a: ADD DOMESTIC WATER SOURCE FROM THE SOUTHWEST SITE NEW FIRE HYDRANT TO THE WEST SIDE OF THE DECK WITH A 2" REDUCED PRESSURE BACKFLOW PREVENTER, HOTBOX, DOMESTIC WATER BOOSTER PUMP AND 2" DOMESTIC WATER MAIN STUBBED INTO THE DECK.

3b: PROVIDE 2" PIPING AND TWO (2) HOSE CONNECTIONS ON LEVELS 1 THROUGH 5 AT EACH END OF RAMP.

UNCW
UNIVERSITY of NORTH CAROLINA WILMINGTON
601 S COLLEGE ROAD
WILMINGTON, NORTH CAROLINA 28403

PARKING DECK II AND SURFACE PARKING (DESIGN-BUILD)
SOUTH CAMPUS - 4965 RIEGEL ROAD

SCO ID NUMBER: 18-19226-01A
CODE: 441828
ITEM: 301

CONTRACTOR
Balfour Beatty Construction

DESIGNER

CLARKNEXSEN
1523 ELIZABETH AVENUE, SUITE 300
CHARLOTTE, NORTH CAROLINA 28204
704·377·8800
CLARK NEXSEN LICENSE NUMBER: C-1028

WALKER CONSULTANTS
13860 Ballantyne Corporate Place
Suite 140
Charlotte, NC 28277
T: 704.247.6230
www.walkerconsultants.com
NC License No. F-0518

McKIM&CREED
CIVIL ENGINEER
243 NORTH FRONT STREET
WILMINGTON, NORTH CAROLINA
28401
910.343.1048

PROFESSIONAL SEAL
NOT FOR CONSTRUCTION
CLARK NEXSEN CERT NO. 50680 NORTH CAROLINA
NORTH CAROLINA PROFESSIONAL SEAL 023940 ENGINEER WILLIAM CHRISTOPHER BRANCH
NC CORPORATE ENGINEERING LICENSE #C-1028

SUBMITTAL
04/15/19
CONSTRUCTION DOCUMENT SUBMITTAL 01

REVISIONS

KEY PLAN

SHEET
FOURTH LEVEL - PLUMBING PLAN

P104

DESIGN: AWB
DRAWN: AWB
REVIEW: CN

CN 8112

4/15/2019 2:10:32 PM
C:\Revit Projects\8112-UNCW Parking Deck II - P17_ABRANDON@CLARKNEXSEN.COM.rvt

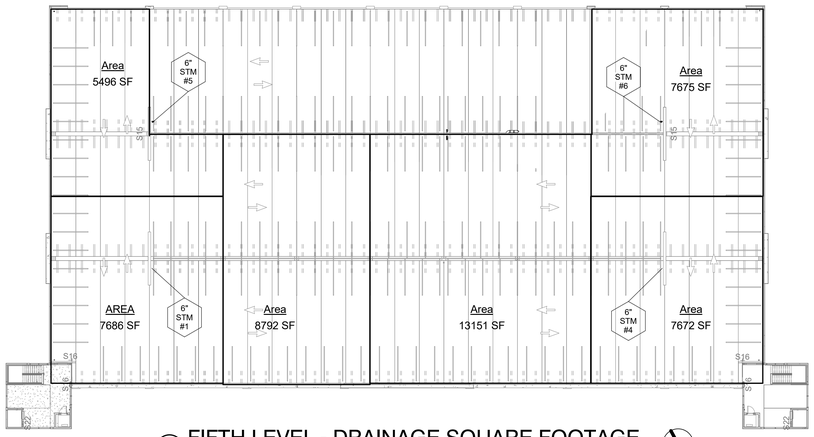

2 FIFTH LEVEL - DRAINAGE SQUARE FOOTAGE
1" = 30'-0"

ROOF DRAINAGE AREA - NORTH			
RISER NUMBER	DRAINAGE SYSTEM	LEVEL	AREA
#5	NORTH	05-FIFTH LEVEL	5496 SF
#6	NORTH	05-FIFTH LEVEL	7675 SF
#6A	NORTH	04-FOURTH LEVEL	15635 SF
			28806 SF

ROOF DRAINAGE AREA - SOUTH			
RISER NUMBER	DRAINAGE SYSTEM	LEVEL	AREA
#1	SOUTH	05-FIFTH LEVEL	7686 SF
#2	SOUTH	05-FIFTH LEVEL	8792 SF
#3	SOUTH	05-FIFTH LEVEL	13151 SF
#4	SOUTH	05-FIFTH LEVEL	7672 SF
			37302 SF

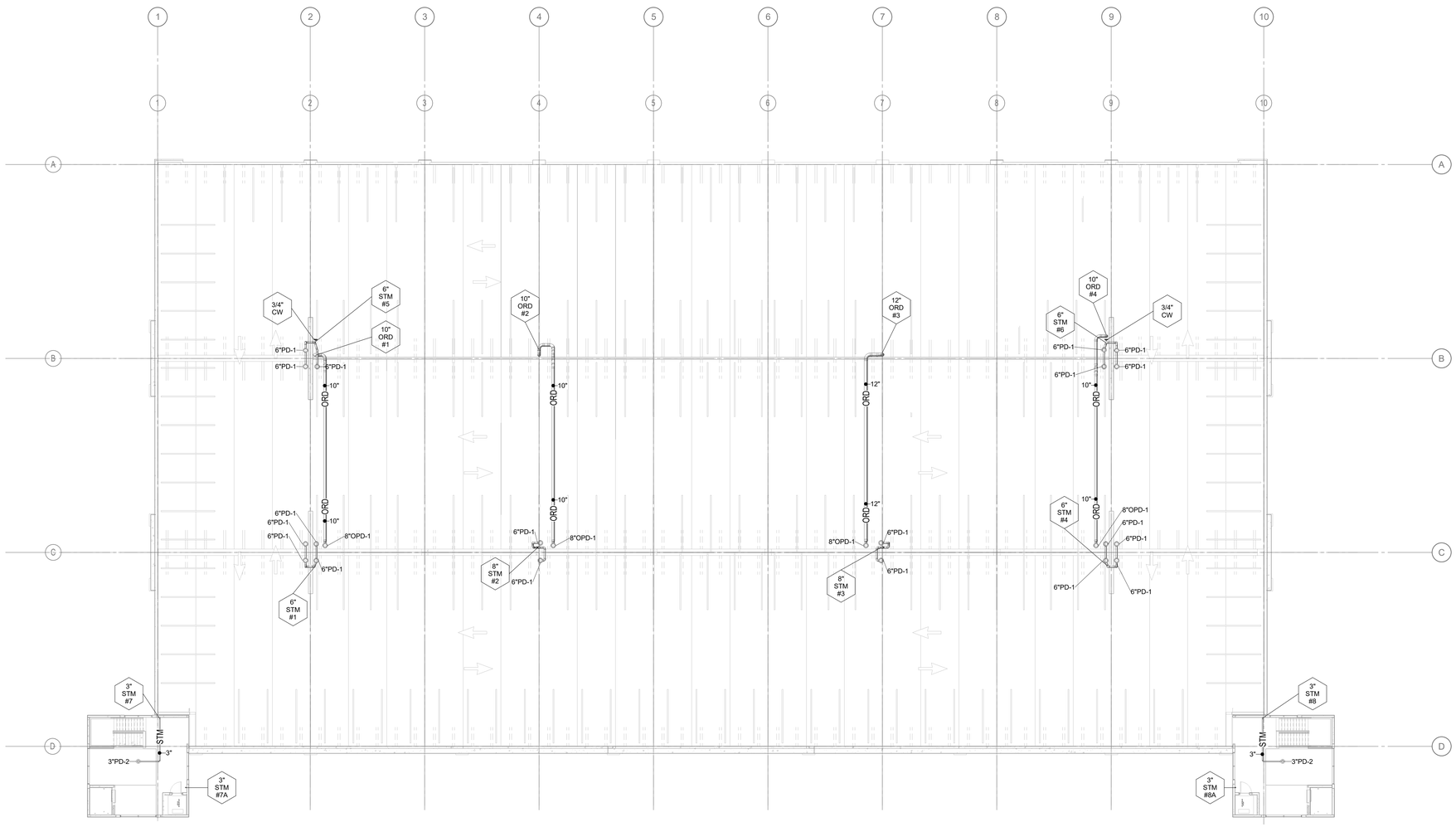

1 FIFTH LEVEL - PLUMBING PLAN
1/16" = 1'-0"
1/8" = 1' - 0" 0 5' 10' 15' 30'

ALTERNATE 3: DOMESTIC WATER

3a: ADD DOMESTIC WATER SOURCE FROM THE SOUTHWEST SITE NEW FIRE HYDRANT TO THE WEST SIDE OF THE DECK WITH A 2" REDUCED PRESSURE BACKFLOW PREVENTER, HOTBOX, DOMESTIC WATER BOOSTER PUMP AND 2" DOMESTIC WATER MAIN STUBBED INTO THE DECK.

3b: PROVIDE 2" PIPING AND TWO (2) HOSE CONNECTIONS ON LEVELS 1 THROUGH 5 AT EACH END OF RAMP.

UNCW
UNIVERSITY of NORTH CAROLINA WILMINGTON
601 S COLLEGE ROAD
WILMINGTON, NORTH CAROLINA 28403

PARKING DECK II AND SURFACE PARKING (DESIGN-BUILD)
SOUTH CAMPUS - 4965 RIEGEL ROAD

SCO ID NUMBER: 18-19226-01A
CODE: 441828
ITEM: 301

CONTRACTOR
Balfour Beatty Construction

DESIGNER

CLARKNEXSEN
1523 ELIZABETH AVENUE, SUITE 300
CHARLOTTE, NORTH CAROLINA 28204
704·377·8800
CLARK NEXSEN LICENSE NUMBER: C-1028

WALKER CONSULTANTS
13860 Ballantyne Corporate Place
Suite 140
Charlotte, NC 28277
T: 704.247.6230
www.walkerconsultants.com
NC License No. F-0518

McKIM&CREED
CIVIL ENGINEER
243 NORTH FRONT STREET
WILMINGTON, NORTH CAROLINA
28401
910.343.1048

PROFESSIONAL SEAL
NOT FOR CONSTRUCTION
CLARK NEXSEN NORTH CAROLINA CERT NO. 5068D
NORTH CAROLINA PROFESSIONAL SEAL 023940 ENGINEER ANDREW WILLIAM BRANDON
NC CORPORATE ENGINEERING LICENSE #C-1028

SUBMITTAL
04/15/19
CONSTRUCTION DOCUMENT SUBMITTAL 01

REVISIONS

KEY PLAN

SHEET
FIFTH LEVEL - PLUMBING PLAN

P105

DESIGN: AWB
DRAWN: AWB
REVIEW: CN

CN 8112

4/15/2019 2:11:01 PM
C:\Revit Projects\8112-UNCW Parking Deck II - P17_ABRANDON@CLARKNEXSEN.COM.rvt

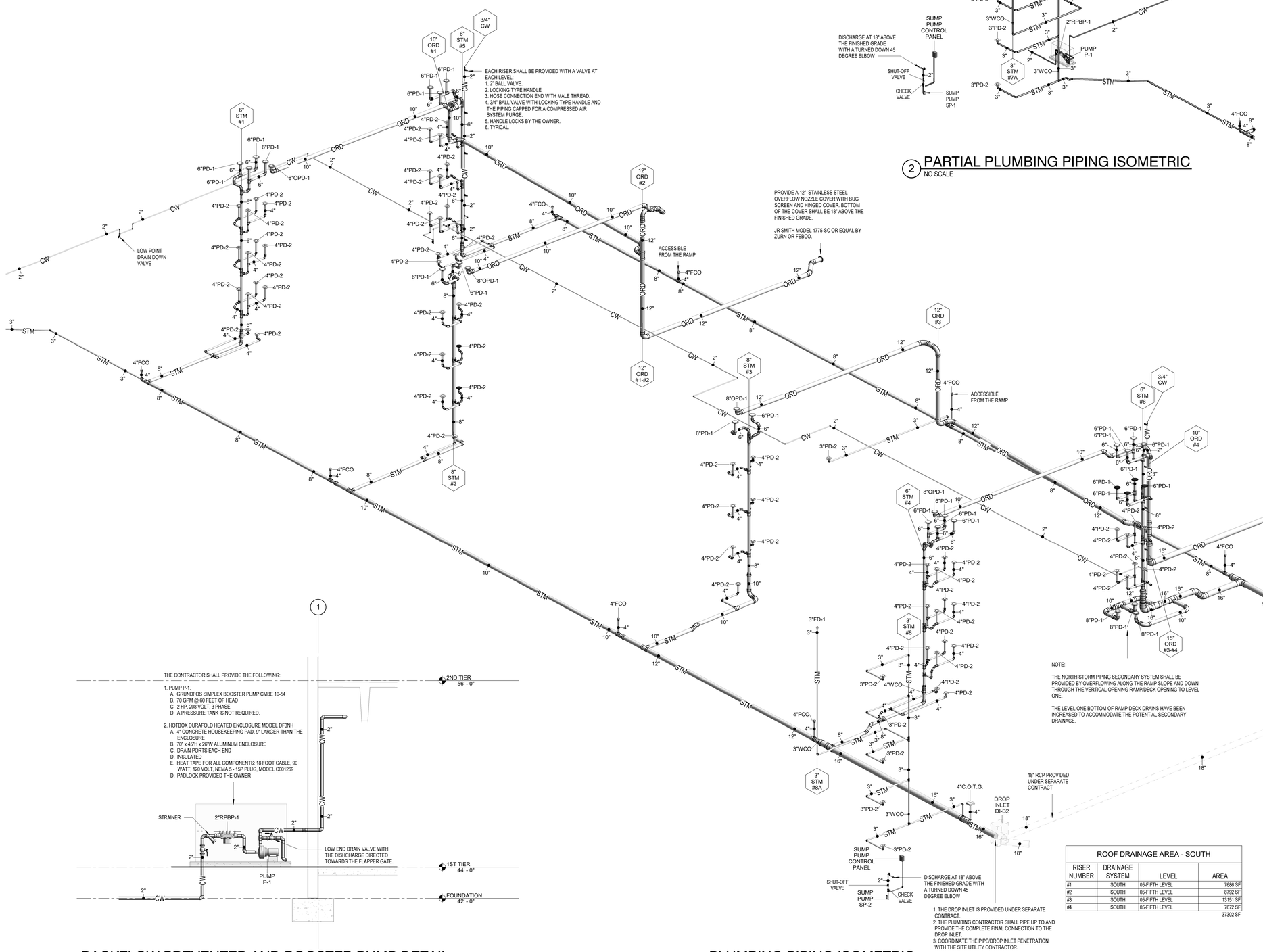

2 PARTIAL PLUMBING PIPING ISOMETRIC
NO SCALE

1 PLUMBING PIPING ISOMETRIC
NO SCALE

ALTERNATE 3: DOMESTIC WATER

3a: ADD DOMESTIC WATER SOURCE FROM THE SOUTHWEST SITE NEW FIRE HYDRANT TO THE WEST SIDE OF THE DECK WITH A 2" REDUCED PRESSURE BACKFLOW PREVENTER, HOTBOX, DOMESTIC WATER BOOSTER PUMP AND 2" DOMESTIC WATER MAIN STUBBED INTO THE DECK.

3b: PROVIDE 2" PIPING AND TWO (2) HOSE CONNECTIONS ON LEVELS 1 THROUGH 5 AT EACH END OF RAMP.

3 BACKFLOW PREVENTER AND BOOSTER PUMP DETAIL
3/8" = 1'-0"

ROOF DRAINAGE AREA - NORTH

RISER NUMBER	DRAINAGE SYSTEM	LEVEL	AREA
#5	NORTH	05-FIFTH LEVEL	5496 SF
#6	NORTH	05-FIFTH LEVEL	7675 SF
#6A	NORTH	04-FOURTH LEVEL	15635 SF
			28806 SF

ROOF DRAINAGE AREA - SOUTH

RISER NUMBER	DRAINAGE SYSTEM	LEVEL	AREA
#1	SOUTH	05-FIFTH LEVEL	7686 SF
#2	SOUTH	05-FIFTH LEVEL	8792 SF
#3	SOUTH	05-FIFTH LEVEL	13151 SF
#4	SOUTH	05-FIFTH LEVEL	7672 SF
			37302 SF

UNCW
UNIVERSITY of NORTH CAROLINA WILMINGTON
601 S COLLEGE ROAD
WILMINGTON, NORTH CAROLINA 28403

PARKING DECK II AND SURFACE PARKING (DESIGN-BUILD)
SOUTH CAMPUS - 4965 RIEGEL ROAD

SCO ID NUMBER: 18-19226-01A
CODE: 441828
ITEM: 301

CONTRACTOR
Balfour Beatty Construction

DESIGNER

CLARKNEXSEN
1523 ELIZABETH AVENUE, SUITE 300
CHARLOTTE, NORTH CAROLINA 28204
704·377·8800
CLARK NEXSEN LICENSE NUMBER: C-1028

WALKER CONSULTANTS
13860 Ballantyne Corporate Place
Suite 140
Charlotte, NC 28277
T: 704.247.6230
www.walkerconsultants.com
NC License No. F-0518

McKIM&CREED
CIVIL ENGINEER
243 NORTH FRONT STREET
WILMINGTON, NORTH CAROLINA
28401
910.343.1048

PROFESSIONAL SEAL
NOT FOR CONSTRUCTION
CLARK NEXSEN CERT NO. 50680 NORTH CAROLINA
NORTH CAROLINA PROFESSIONAL SEAL 023940 ENGINEER ANTHONY W. BRANDON
NC CORPORATE ENGINEERING LICENSE #C-1028

SUBMITTAL
04/15/19
CONSTRUCTION DOCUMENT SUBMITTAL 01

REVISIONS

KEY PLAN

SHEET
PLUMBING PIPING ISOMETRIC

P201

DESIGN: AWB
DRAWN: AWB
REVIEW: CN

CN 8112

4/15/2019 2:11:06 PM
C:\Revit Projects\8112-UNCW Parking Deck II - P17_ABRANDON@CLARKNEXSEN.COM.rvt

LEGEND

GENERAL

(PROJECT MAY NOT USE ALL SYMBOLS / ABBREVIATIONS)

#	CONSTRUCTION NOTE IDENTIFICATION
XXX	ROOM NUMBER IDENTIFICATION
AD	ACCESS DOOR
AFF	ABOVE FINISHED FLOOR
AFG	ABOVE FINISHED GRADE
ALUM	ALUMINUM
ARCH	ARCHITECTURAL
DIA	DIAMETER
DWG	DRAWING
EX	EXISTING
EXR	EXISTING TO REMAIN
GA	GAUGE
GALV	GALVANIZED
MISC	MISCELLANEOUS
NIC	NOT IN CONTRACT
RBJ	RUN THRU JOISTS
TYP	TYPICAL
UON	UNLESS OTHERWISE NOTED
—— D ——	CONDENSATE DRAIN LINE

GENERAL NOTES AND LEGENDS

1. ALL MECHANICAL EQUIPMENT AND INSTALLATIONS SHALL YIELD COMPLETE OPERATIONAL SYSTEMS THAT CONFORM TO THE REQUIREMENTS OF THE APPLICABLE LOCAL ORDINANCES AND CODES INCLUDING BUT NOT LIMITED TO THE 2018 NORTH CAROLINA BUILDING CODE , THE 2018 NORTH CAROLINA MECHANICAL CODE, AND UNDERWRITERS LABORATORIES (OR ETL).

2. THE CONTRACT DOCUMENTS ARE BASED ON EQUIPMENT OF SPECIFIC MANUFACTURERS. IF THE CONTRACTOR SUBMITS OR PROPOSES TO USE EQUIPMENT OTHER THAN THAT USED ON THE CONTRACT DOCUMENTS THEN THE CONTRACTOR SHALL BE RESPONSIBLE FOR ANY DESIGN AND INSTALLATION REVISIONS AT NO ADDITIONAL COST TO THE PROJECT. REVISIONS INCLUDE BUT ARE NOT LIMITED TO, CHANGES IN EQUIPMENT DIMENSIONS OR WEIGHT, ACCESS REQUIREMENTS, ORIENTATION AND CONNECTIONS, AND ELECTRICAL REQUIREMENTS.

3. DO NOT SCALE DRAWINGS. DRAWINGS ARE DIAGRAMMATIC.

4. SHOP DRAWINGS SHALL BE SUBMITTED TO AND APPROVED BY THE ARCHITECT BEFORE ANY MECHANICAL EQUIPMENT IS ORDERED, PURCHASED, RELEASED, OR FABRICATED. SHOP DRAWINGS AND SUBMITTALS SHALL INCLUDE PRODUCT INFORMATION FOR ALL EQUIPMENT SPECIFIED OR SCHEDULED ON THE DRAWINGS.

5. ALL MECHANICAL EQUIPMENT AND MATERIALS SHALL BE INSTALLED ACCORDING TO MANUFACTURERS' RECOMMENDATIONS AND INSTALLATION INSTRUCTIONS USING MANUFACTURER RECOMMENDED ACCESSORIES AND ASSOCIATED MATERIALS.

6. ALL EQUIPMENT AND MATERIALS INSTALLED IN AIR PLENUMS SHALL BE COMPLIANT WITH THE REQUIREMENTS FOR PLENUM INSTALLATIONS.

7. ALL MECHANICAL EQUIPMENT AND SYSTEMS SHALL BE GUARANTEED FOR A PERIOD OF TWELVE MONTHS AFTER ACCEPTANCE BY OWNER.

8. AT SUBSTANTIAL COMPLETION ALL FILTERS IN ALL MECHANICAL EQUIPMENT SHALL BE NEW AND CLEAN AND AN EXTRA NEW SET SHALL BE PROVIDED TO THE OWNER.

9. CONTRACTOR SHALL COORDINATE THE INSTALLATION OF ALL MECHANICAL EQUIPMENT, ETC. TO FIT WITHIN THE SPACE ALLOWED BY THE ARCHITECTURAL AND STRUCTURAL CONDITIONS. CUTTING OR OTHERWISE ALTERING ANY STRUCTURAL MEMBERS SHALL NOT BE PERMITTED WITHOUT WRITTEN PERMISSION FROM THE ARCHITECT.

10. LOCATE ALL EQUIPMENT TO PRODUCE UNOBSTRUCTED ACCESS TO EQUIPMENT ACCESS PANELS, CONTROLS.

11. PRIOR TO INSTALLATION, THE MECHANICAL CONTRACTOR SHALL COORDINATE WITH ALL TRADES THE LOCATIONS OF AIR CONDITIONING EQUIPMENT INSTALLED OUTDOORS.

12. AIR CONDITIONING EQUIPMENT INSTALLED OUTDOORS AT GRADE SHALL BE INSTALLED LEVEL ON 4-INCHES TALL 4-INCH THICK REINFORCED CONCRETE PADS THAT EXTEND 6-INCHES BEYOND THE PERIMETER OF THE EQUIPMENT.

ELECTRICAL COORDINATION

13. CONTRACTOR SHALL COORDINATE ELECTRICAL CHARACTERISTICS AND REQUIREMENTS OF ALL MECHANICAL EQUIPMENT WITH THE ELECTRICAL DRAWINGS AND ELECTRICAL CONTRACTOR BEFORE ANY PRODUCT INFORMATION OR SHOP DRAWINGS ARE SUBMITTED AND BEFORE ANY EQUIPMENT IS ORDERED. THE ELECTRICAL CHARACTERISTICS (VOLTAGE, PHASE, OVERLOAD PROTECTION, ETC.) OF THE EQUIPMENT FURNISHED SHALL BE COMPATIBLE WITH THE ELECTRICAL CHARACTERISTICS SHOWN ON THE DRAWINGS. ON SHOP DRAWING SUBMITTALS THE MECHANICAL CONTRACTOR SHALL STATE THAT THE ELECTRICAL CHARACTERISITICS OF ALL EQUIPMENT HAS BEEN COORDINATED WITH THE ELECTRICAL CONTRACT DOCUMENTS AND THE ELECTRICAL CONTRACTOR.

14. ALL MECHANICAL EQUIPMENT REQUIRING ELECTRICAL POWER SHALL BE INSTALLED WITH DISCONNECT SWITCHES AND STARTERS WHETHER THEY ARE AN INTEGRAL COMPONENT OF THE MANUFACTURER'S EQUIPMENT OR NOT. COORDINATE SWITCH TYPE (FUSED OR NON-FUSED) WITH EQUIPMENT CHARACTERISTICS, MANUFACTURER'S RECOMMENDATIONS, ELECTRICAL DRAWINGS, AND ELECTRICAL CONTRACTOR.

15. ALL REQUIRED CONTROL WIRING FOR HVAC AND PLUMBING (INCLUDING POWER WIRING REQUIRED FOR CONTROL PANELS, ACTUATORS, DEVICES, ETC.) NOT SHOWN ON THE ELECTRICAL DRAWINGS SHALL BE INCLUDED AS PART OF THE MECHANICAL WORK. WIRING, INCLUDING THAT IN HVAC PLENUM SPACES, SHALL BE INSTALLED ACCORDING TO CODE REQUIREMENTS.

16. UNLESS NOTED OTHERWISE, STARTERS, TRANSFORMERS, CONTROLS, AND CONTROL WIRING REQUIRED FOR ALL MECHANICAL SYSTEMS SHALL BE FURNISHED AND INSTALLED BY THE MECHANICAL CONTRACTOR. SEE ELECTRICAL SPECIFICATIONS FOR WIRING REQUIREMENTS.

17. ALL PIPE PENETRATIONS OF FIRE-, SMOKE-, OR FIRE- AND SMOKE-RATED ASSEMBLIES SHALL BE FIRE-STOPPED AS REQUIRED TO PRODUCE A RATED ASSEMBLY. FIRE BARRIER PRODUCTS SHALL BE AS MANUFACTURED BY 3M CO., HILTI INC., OR OTHER APPROVED MANUFACTURER. ACCEPTABLE PRODUCTS ARE HILTI FS-ONE, CP 606, CP648 WRAP STRIP, OR CP680 CAST-IN DEVICE SYSTEMS, OR AS RECOMMENDED BY THE MANUFACTURER FOR A PARTICULAR APPLICATION OR AN EQUIVALENT SYSTEM AS APPROVED BY LOCAL CODE OFFICIALS.

18. PIPING SHALL NOT BE SUPPORTED FROM ANY FIRE RATED WALL.

COOLING COIL CONDENSATE

19. CONDENSATE FROM ALL AIR CONDITIONING EQUIPMENT SHALL BE TRAPPED AND ROUTED TO THE NEAREST FLOOR DRAIN. WHERE INDICATED TO BE PUMPED CONDENSATE MAY BE PUMPED WITH CONTROLS INCLUDED AS REQUIRED BY CODE. DRAIN LINES SHALL BE ROUTED TO AVOID INTERFERENCE WITH PASSAGEWAYS AND MAINTENANCE AND TO AVOID CREATING TRIPPING HAZARDS.

20. THE MINIMUM PIPE SIZE FOR CONDENSATE DRAIN LINES SHALL BE 3/4-INCHES.

21. THE CONDENSATE COIL DRAIN LINES SHALL BE MADE OF COOPER WITH 1/2 INCH THICK FLEXIBLE ELASTOMERIC WITH 30 MIL WHITE PVC JACKET OVER INSULATION.

REFRIGERANT PIPING

22. WHEN THE ACCUMULATED EQUIVALENT LENGTH OF REFRIGERANT LINES BETWEEN PIECES OF EQUIPMENT EXCEEDS THE MANUFACTURER'S RECOMMENDED LENGTHS FOR STANDARD DIAMETER SIZED LINES THEN FURNISH AND INSTALL A MANUFACTURER'S APPROVED REFRIGERANT PIPING DIAGRAM FOR TYPICAL SYSTEMS SHOWING RECOMMENDED PIPE SIZES AND COMPONENTS SUCH AS SUCTION LINE ACCUMULATORS WHEN REQUIRED AND INSTALL REFRIGERANT PIPING AS RECOMMENDED BY THE MANUFACTURER.

23. ALL PIPING ABOVE GRADE SHALL BE SUPPORTED BY THE BUILDING STRUCTURE AND SHALL NOT REST ON CEILING TILES OR THE CEILING SUPPORT STRUCTURE. PIPING HUNG FROM JOISTS SHALL BE HUNG FROM THE TOP CHORDS OF THE JOISTS.

SPLIT SYSTEM SCHEDULE

INDOOR UNIT DATA									OUTDOOR UNIT DATA								
		NOM.	EAT	COOLING	HEATING @ 47	HEATING @ 17	BASIS OF DESIGN			COOLING	COOLING	HEATING @ 47	HEATING @ 17		BASIS OF DESIGN		REMARKS
MARK	SERVES	CFM	DB/WB	BTU/HR	BTU/HR	BTU/HR	MANUF	MODEL	MARK	BTU/HR	SEER	BTU/HR	BTU/HR	REFRIGERANT	MANUF	MODEL	
AC-1	REFER DRAWINGS	335	80/67	12,000	-	-	MITSUBISHI	PKA-A12HA6	CU-1	12,000	15.2	-	-	R410A	MITSUBISHI	PUY-A12NHA6-BS	1,2,3,4,5,6,7,8
AC-2	REFER DRAWINGS	385	80/67	18,000	-	-	MITSUBISHI	PKA-A18NHA4	CU-2	18,000	15.3	-	-	R410A	MITSUBISHI	PUY-A18NHA4-BS	1,2,3,4,5,6,7,8
ACHP-1	REFER DRAWINGS	705	80/67	12,000	14,000	9,200	MITSUBISHI	PKA-A12HA7	HP-1	12,000	20.8	14,000	9,200	R410A	MITSUBISHI	PUZ-A12NKA7-BS	1,2,3,4,5,6,7,8

1. DISCONNECT SWITCH FOR INDOOR UNIT AND DISCONNECT SWITCH FOR OUTDOOR UNIT.
2. CONDENSATE PUMP.
3. WALL MOUNTED T-STAT
4. LOW AMBIENT OPERATION KIT FOR OPERATION TO RUN TO 0 °F
5. INDOOR AIR HANDLER POWERED BY OUTDOOR CONDENSING UNIT
6. SYSTEM CONTROL BY FACTORY PROVIDED CONTROLS
7. INSULATED REFRIGERANT LINE PROVIDED BY MANUFACTURER.
8. SEA COAST MODEL FOR OUTDOOR UNIT.
9. PROVIDE MANUFACTURER WALL BRACKET.
10. PROVIDE BACNET INTERFACE CARD.

ELECTRIC UNIT HEATER SCHEDULE

MARK	LOCATION	TYPE	HEAT CAPACITY (KW)	AIRFLOW (CFM)	BASIS OF DESIGN: MANUFACTURER	BASIS OF DESIGN: MODEL NO
UH-1	REFER TO DWG.	UNIT HEATER	5.0	400	MARKEL	F2F5105N

NOTES:

1. DISCONNECT SWITCH
2. INTEGRAL TAMPER RESISTANT THERMOSTAT

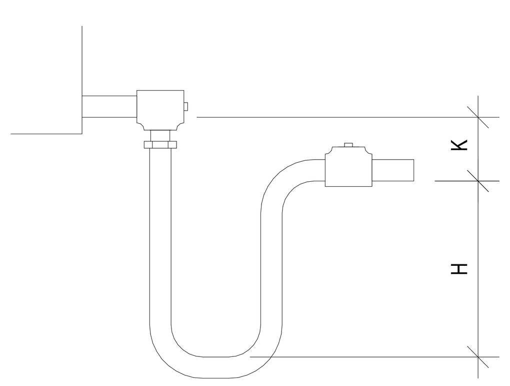

K = MIN. 1/2"

H = 1/2" PLUS MAX. TOTAL STATIC PRESSURE

POSITIVE PRESSURE TRAP

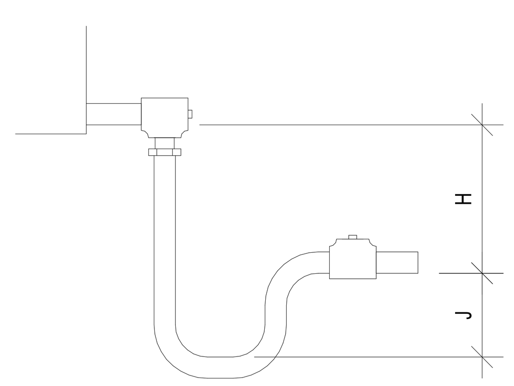

J = HALF OF H

H = 1" PLUS MAX. NEG. STATIC PRESSURE

NEGATIVE PRESSURE TRAP

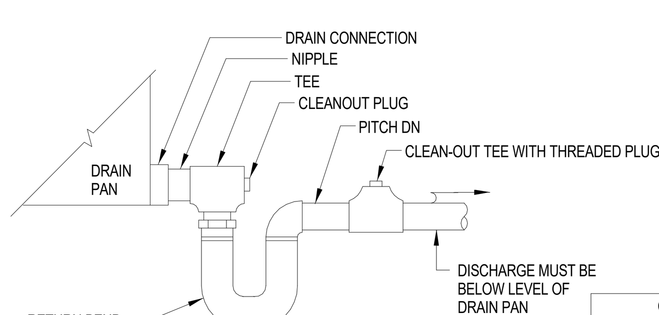

CONDENSATE DRAIN SIZING	
PIPE SIZE	UNIT SIZE
*3/4"	UP TO 2 TONS
1"	UP TO 5 TONS
1-1/4"	UP TO 30 TONS
1-1/2"	UP TO 50 TONS
2"	UP TO 150 TONS
3"	UP TO 300 TONS
4"	UP TO 430 TONS
6"	UP TO 650 TONS

*MINIMUM CONDENSATE DRAIN PIPE SIZE

NOTES

1. ALLOW SUFFICIENT SPACE BELOW DRAIN PAN FOR TRAP. COORDINATE MOUNTING OF HVAC UNIT ON EQUIPMENT PAD TO PROVIDE SUFFICIENT HEIGHT.
2. PITCH DRAIN PIPE FOR PROPER RUN-OFF.
3. MANUALLY PRIME FILL TRAP BEFORE START-UP TO FORM INITIAL DRAIN SEAL.
4. SUPPORT DRAIN LINES TO PREVENT SAG AND CONDENSATE OVERFLOW.
5. INSTALL A CLEANOUT TEE AT EACH CHANGE OF DIRECTION GREATER THAN 45°.
6. MAXIMUM DISTANCE BETWEEN CLEANOUTS TO BE 50 LINEAR FEET.

CONDENSATE DRAIN DETAIL

NO SCALE

CONNECT BAS TO EXISTING EMCS CONTROL SYSTEM

BAS BACNET CONTROLS SHALL CONNECT TO AND COMMUNICATE WITH THE EXISTING CAMPUS CONTROL SYSTEM.
EXISTING CAMPUS ENERGY MANAGEMENT CONTROL SYSTEM (ECMS):
1. TWO TIER ARCHITECTURE
2. FIRST TIER - TRIDIUM NIAGARA N4 WITH ENERGY ANALYTICS SOFTWARE.
3. SECOND TIER - LON NETWORK WITH LONWORKS CERTIFIED CONTROLLERS.

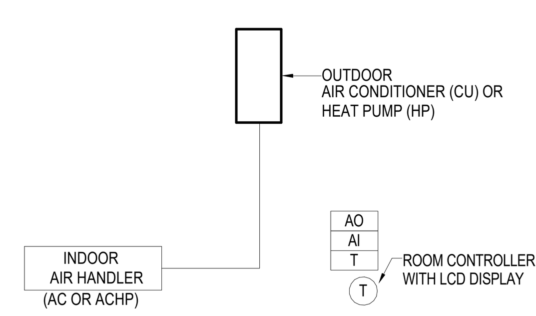

SEQUENCE OF OPERATION - SPLIT SYSTEM AIR CONDITIONER (AC-1 / CU-1, AC-2 / CU-2)

EACH SPLIT SYSTEM AIR HANDLING UNIT SHALL BE PROVIDED WITH A BACNET INTERFACE CARD TO ALLOW FOR COMMUNICATION WITH THE BAS.

UPON A RISE IN SPACE TEMPERATURE ABOVE SETPOINT AS SENSED BY ROOM CONTROLLER THE REFRIGERATION CYCLE SHALL BE ENABLED AND INDOOR AIR HANDLING UNIT AND AFFILIATED OUTDOOR UNIT SHALL ENERGIZE. SYSTEM SHALL CYCLE TO MAINTAIN SPACE TEMPERATURE SETPOINT.

OUTDOOR UNIT POWERS THE INDOOR UNIT. SPLIT SYSTEM SHALL COME WITH AN ADJUSTABLE CONTROLLER WITH LCD DISPLAY AND SHALL BE CONNECTED TO THE BAS.

THE FOLLOWING CONTROL POINTS ARE ADJUSTABLE THROUGH THE BAS: OFF/ON SETUP, SETPOINT, MODE SETUP, AIR DIRECTION SETUP, AND TEMPERATURE UNITS.

THE FOLLOWING CONTROL POINTS SHALL BE MONITORED THROUGH THE BAS: OFF/ON STATE, MODE STATE, AIR DIRECTION STATE, INLET TEMPERATURE, FAULT CODE.

SEQUENCE OF OPERATION - SPLIT SYSTEM HEATPUMP (ACHP-1 / HP-1)

EACH SPLIT SYSTEM AIR HANDLING UNIT SHALL BE PROVIDED WITH A BACNET INTERFACE CARD TO ALLOW FOR COMMUNICATION WITH THE BAS.

UPON A RISE IN SPACE TEMPERATURE ABOVE SETPOINT AS SENSED BY ROOM CONTROLLER INDOOR AIR HANDLING UNIT AND AFFILIATED OUTDOOR UNIT SHALL ENERGIZE IN COOLING MODE. SYSTEM SHALL CYCLE TO MAINTAIN SPACE TEMPERATURE SETPOINT.

UPON A FALL IN SPACE TEMPERATURE BELOW SETPOINT AS SENSED BY ROOM CONTROLLER THE REVERSE REFRIGERATION CYCLE SHALL BE ENABLED, INDOOR AIR HANDLING UNIT AND AFFILIATED OUTDOOR UNIT SHALL ENERGIZE IN HEATING MODE. SYSTEM SHALL CYCLE TO MAINTAIN SPACE TEMPERATURE SETPOINT.

OUTDOOR UNIT POWERS THE INDOOR UNIT. SPLIT SYSTEM SHALL COME WITH AN ADJUSTABLE CONTROLLER WITH LCD DISPLAY AND SHALL BE CONNECTED TO THE BAS.

THE FOLLOWING CONTROL POINTS ARE ADJUSTABLE THROUGH THE BAS: OFF/ON SETUP, SETPOINT, MODE SETUP, AIR DIRECTION SETUP, AND TEMPERATURE UNITS.

THE FOLLOWING CONTROL POINTS SHALL BE MONITORED THROUGH THE BAS: DRIVE OFF/ON STATE, MODE STATE, AIR DIRECTION STATE, INLET TEMPERATURE, FAULT CODE.

SPLIT SYSTEM AIR CONDITIONER & HEAT PUMP CONTROL DIAGRAM

NO SCALE

UNCW
UNIVERSITY of NORTH CAROLINA WILMINGTON
601 S COLLEGE ROAD
WILMINGTON, NORTH CAROLINA 28403

PARKING DECK II AND SURFACE PARKING (DESIGN-BUILD)
SOUTH CAMPUS - 4965 RIEGEL ROAD

SCO ID NUMBER: 18-19226-01A
CODE: 441828
ITEM: 301

CONTRACTOR
Balfour Beatty Construction

DESIGNER
CLARKNEXSEN
1523 ELIZABETH AVENUE, SUITE 300
CHARLOTTE, NORTH CAROLINA 28204
704·377·8800
CLARK NEXSEN LICENSE NUMBER: C-1028

WALKER CONSULTANTS
13860 Ballantyne Corporate Place
Suite 140
Charlotte, NC 28277
T: 704.247.6230
www.walkerconsultants.com
NC License No. F-0518

McKIM&CREED
CIVIL ENGINEER
243 NORTH FRONT STREET
WILMINGTON, NORTH CAROLINA
28401
910.343.1048

PROFESSIONAL SEAL

NOT FOR CONSTRUCTION

NC CORPORATE ENGINEERING LICENSE #C-1028

SUBMITTAL
03/29/2019
CONSTRUCTION DOCUMENTS SUBMITTAL 01

REVISIONS

KEY PLAN

SHEET
GENERAL NOTES, LEGEND, CONTROLS, AND SCHEDULE

M-001

DESIGN: JRS
DRAWN: JRS
REVIEW: JNW

CN 8112

4/15/2019 11:42:52 AM
C:\Revit Projects\8112_UNCW Parking Deck II M17_jsullivanGHXEZ.rvt

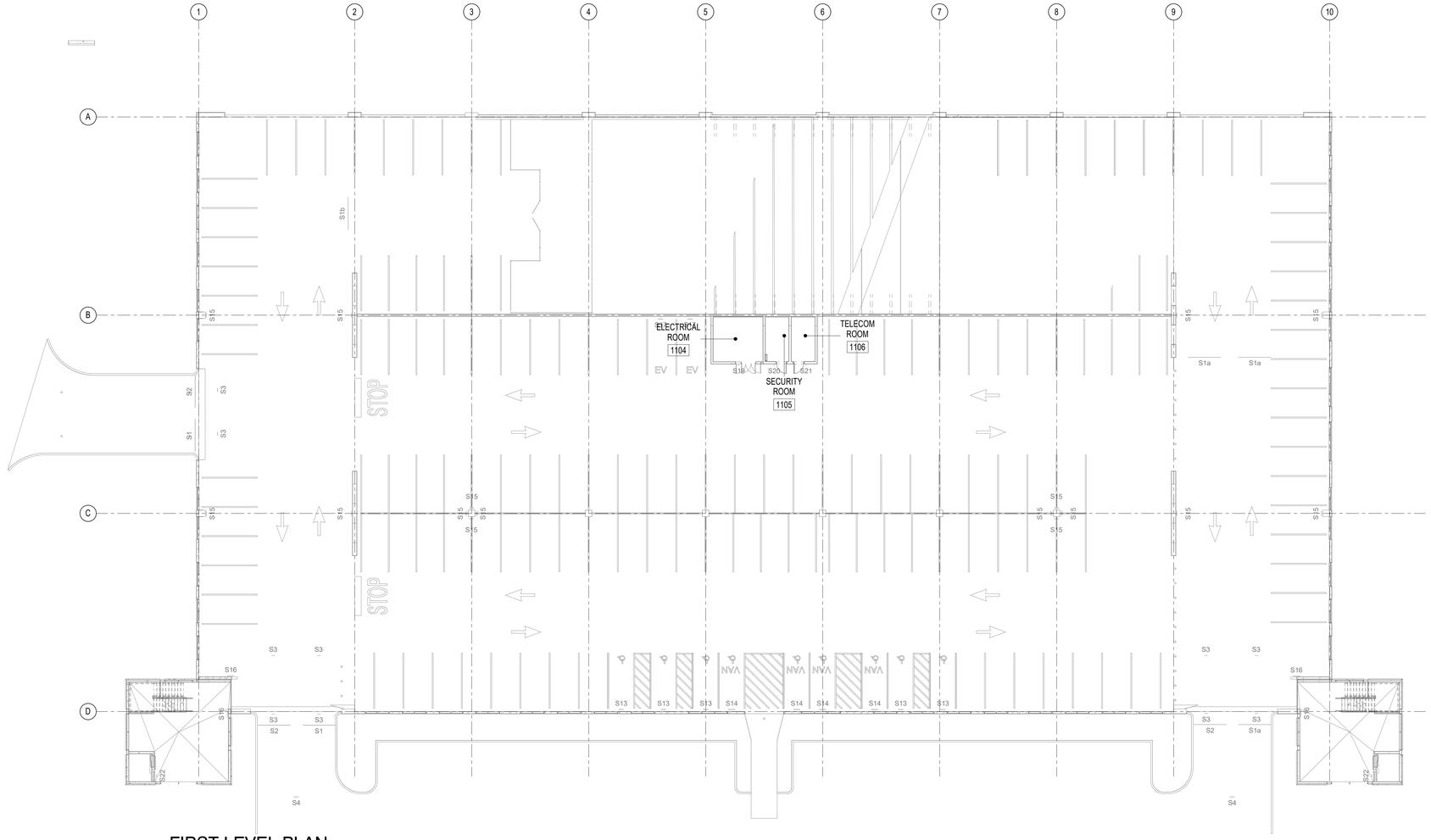

FIRST LEVEL PLAN
1/16" = 1'-0"

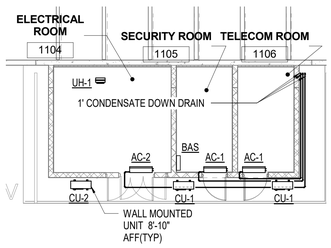

1 COMMUNICATION AND ELECTRICAL ENLARGED PLANS
1/8" = 1'-0"

COOLING SET POINT TO BE NO COOLER THAN 80 F. SUPPLY AIR FROM INDOOR UNIT TO BE DIRECTED AWAY FROM EQUIPMENT AND ALL HARD SURFACES.

UNCW
UNIVERSITY of NORTH CAROLINA WILMINGTON
601 SOUTH COLLEGE ROAD
WILMINGTON, NORTH CAROLINA 28403

PARKING DECK II - SOUTH CAMPUS
RIEGEL ROAD

SCO ID NUMBER: 19226
CODE: 441828
ITEM: 301

CONTRACTOR
Balfour Beatty Construction

DESIGNER
CLARKNEXSEN
1523 ELIZABETH AVENUE, SUITE 300
CHARLOTTE, NORTH CAROLINA 28204
704-377-8800

CLARK NEXSEN LICENSE NUMBER: C-1028

WALKER CONSULTANTS

McKIM&CREED
CIVIL ENGINEER
243 NORTH FRONT STREET
WILMINGTON, NORTH CAROLINA
28401
910.343.1048

PROFESSIONAL SEAL
NOT FOR CONSTRUCTION
CLARK NEXSEN CERT NO. 50680 NORTH CAROLINA
SEAL 024319

NC CORPORATE ENGINEERING LICENSE #C-1028

SUBMITTAL
03/29/2019
CONSTRUCTION DOCUMENTS SUBMITTAL 01

REVISIONS

KEY PLAN

SHEET
FIRST LEVEL PLAN

MH101

DESIGN: JRS
DRAWN: JRS
REVIEW: JNW

CN 8112

4/15/2019 11:42:54 AM
C:\Revit Projects\8112_UNCW Parking Deck II M17_jsullivan\GHXEZ.rvt

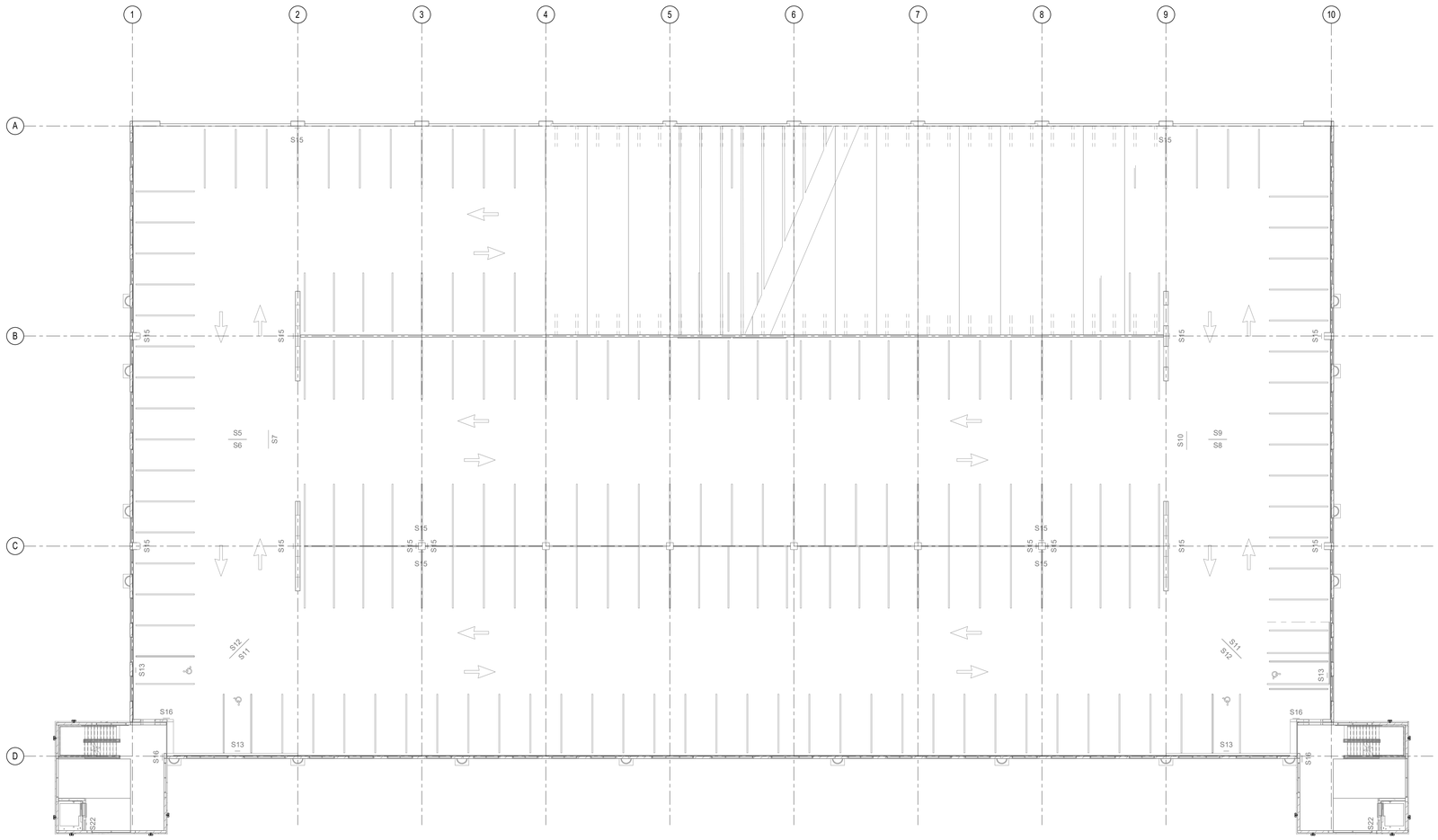

SECOND LEVEL PLAN

1/16" = 1'-0"

UNCW
UNIVERSITY of NORTH CAROLINA WILMINGTON
601 SOUTH COLLEGE ROAD
WILMINGTON, NORTH CAROLINA 28403

PARKING DECK II - SOUTH CAMPUS
RIEGEL ROAD

SCO ID NUMBER: 19226
CODE: 441828
ITEM: 301

CONTRACTOR
Balfour Beatty Construction

DESIGNER

CLARKNEXSEN
1523 ELIZABETH AVENUE, SUITE 300
CHARLOTTE, NORTH CAROLINA 28204
704·377·8800

CLARK NEXSEN LICENSE NUMBER: C-1028

WALKER CONSULTANTS

McKIM&CREED
CIVIL ENGINEER
243 NORTH FRONT STREET
WILMINGTON, NORTH CAROLINA
28401
910.343.1048

PROFESSIONAL SEAL

NOT FOR CONSTRUCTION
CLARK NEXSEN
CERT NO. 50680
NORTH CAROLINA
NORTH CAROLINA PROFESSIONAL SEAL 024319 ENGINEER JAMES NEW WALKER

NC CORPORATE ENGINEERING LICENSE #C-1028

SUBMITTAL
03/29/2019
CONSTRUCTION DOCUMENTS
SUBMITTAL 01

REVISIONS

KEY PLAN

SHEET
SECOND LEVEL PLAN

MH102

DESIGN: JRS
DRAWN: JRS
REVIEW: JNW

CN 8112

4/15/2019 11:42:55 AM
C:\Revit Projects\8172_UNCW Parking Deck II M17_jsullivanGHKEZ.rvt

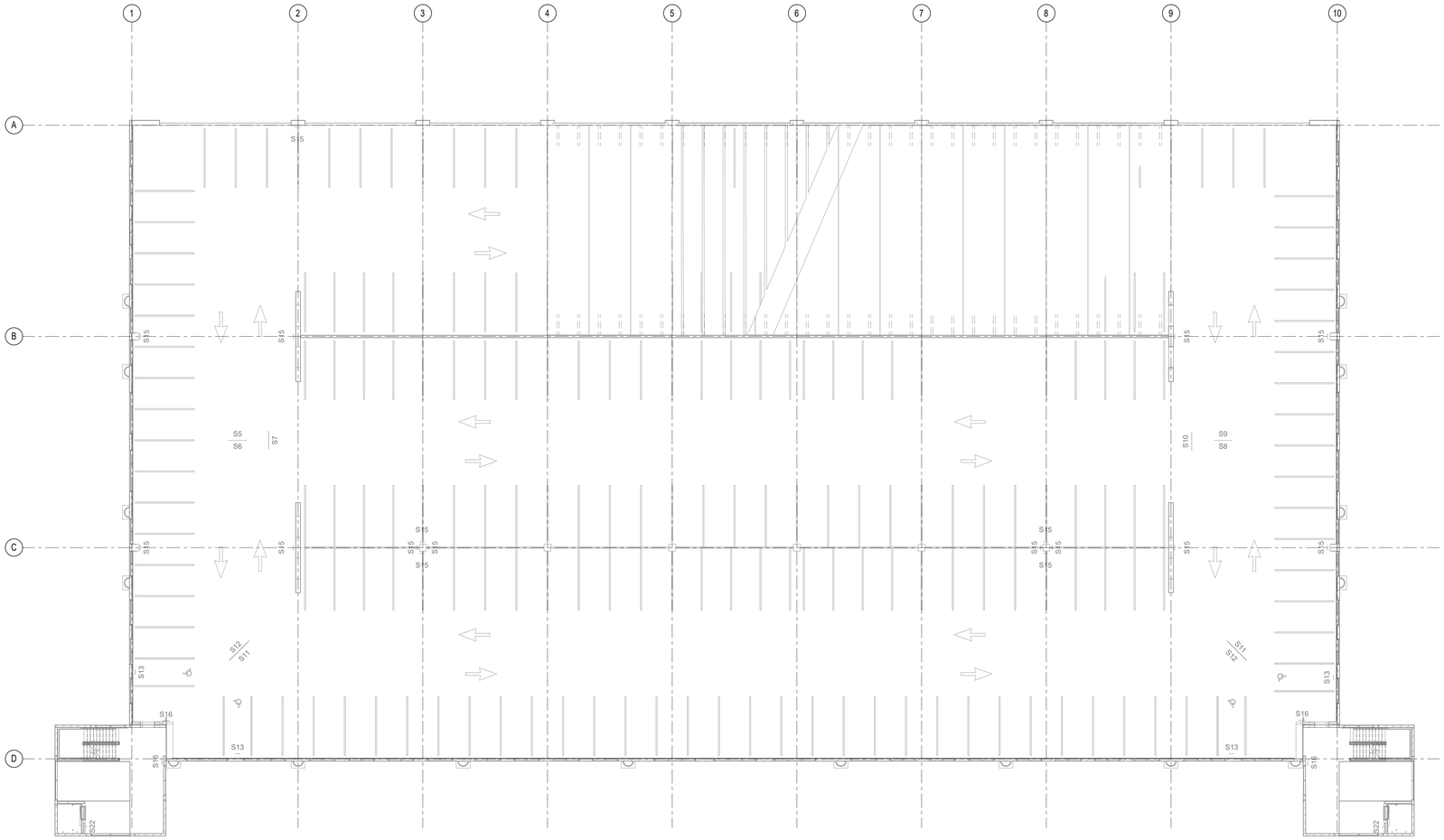

THIRD LEVEL PLAN

NO SCALE

UNCW
UNIVERSITY of NORTH CAROLINA WILMINGTON
601 SOUTH COLLEGE ROAD
WILMINGTON, NORTH CAROLINA 28403

PARKING DECK II - SOUTH CAMPUS
RIEGEL ROAD

SCO ID NUMBER: 19226
CODE: 441828
ITEM: 301

CONTRACTOR
Balfour Beatty Construction

DESIGNER

CLARKNEXSEN
1523 ELIZABETH AVENUE, SUITE 300
CHARLOTTE, NORTH CAROLINA 28204
704·377·8800

CLARK NEXSEN LICENSE NUMBER: C-1028

WALKER CONSULTANTS

McKIM&CREED
CIVIL ENGINEER
243 NORTH FRONT STREET
WILMINGTON, NORTH CAROLINA
28401
910.343.1048

PROFESSIONAL SEAL

NOT FOR CONSTRUCTION

CLARK NEXSEN CERT NO. 50680 NORTH CAROLINA

NORTH CAROLINA PROFESSIONAL SEAL 024319 ENGINEER

NC CORPORATE ENGINEERING LICENSE #C-1028

SUBMITTAL
03/29/2019
CONSTRUCTION DOCUMENTS
SUBMITTAL 01

REVISIONS

KEY PLAN

SHEET
THIRD LEVEL PLAN

MH103

DESIGN: JRS
DRAWN: JRS
REVIEW: JNW

CN 8112

4/15/2019 11:42:57 AM
C:\Revit Projects\8112_UNCW Parking Deck II\M17_jsullivan\GHXEZ.rvt

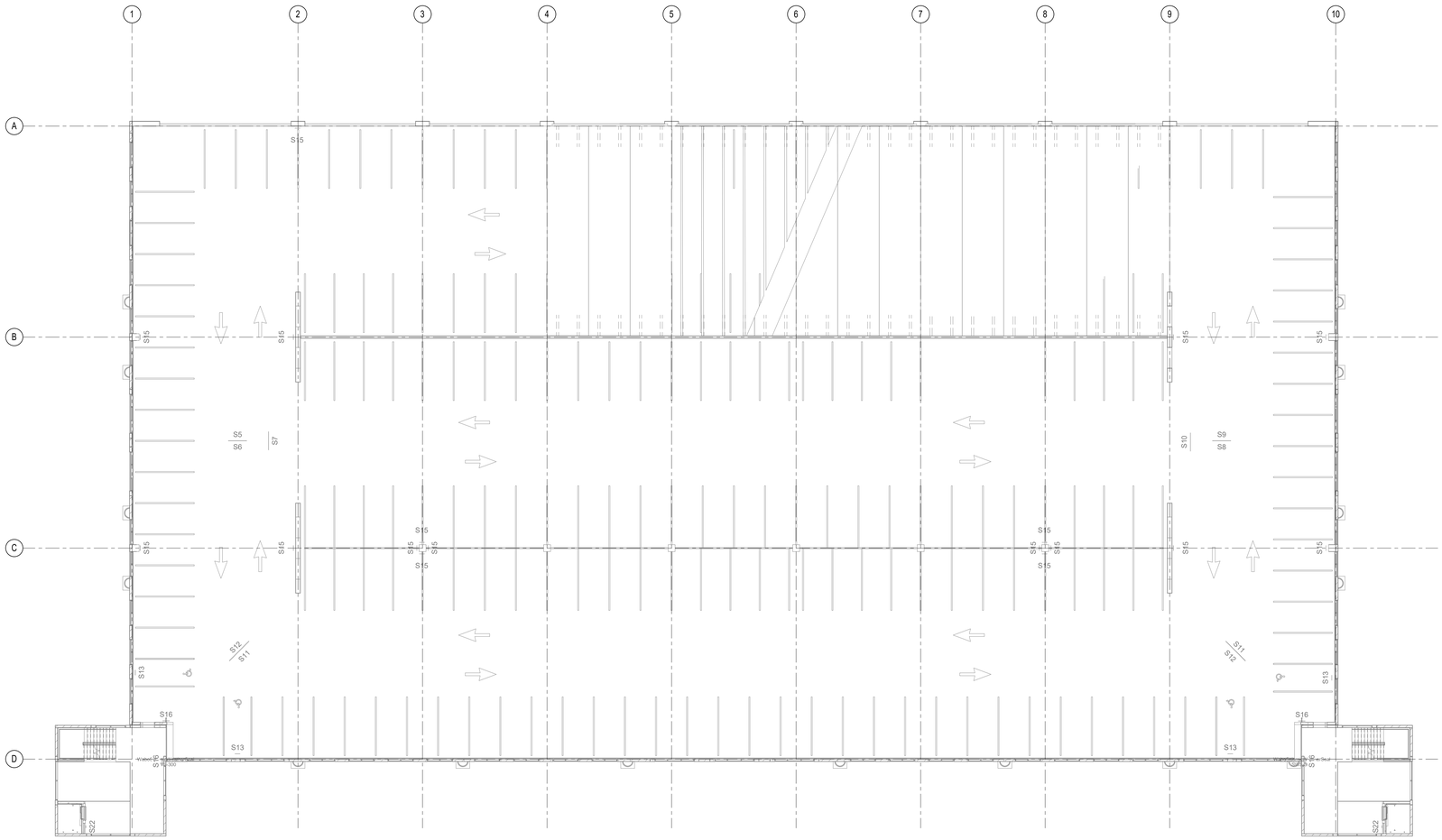

FOURTH LEVEL PLAN

1/16" = 1'-0"

UNCW
UNIVERSITY of NORTH CAROLINA WILMINGTON
601 SOUTH COLLEGE ROAD
WILMINGTON, NORTH CAROLINA 28403

PARKING DECK II - SOUTH CAMPUS
RIEGEL ROAD

SCO ID NUMBER: 19226
CODE: 441828
ITEM: 301

CONTRACTOR
Balfour Beatty Construction

DESIGNER

CLARKNEXSEN
1523 ELIZABETH AVENUE, SUITE 300
CHARLOTTE, NORTH CAROLINA 28204
704·377·8800

CLARK NEXSEN LICENSE NUMBER: C-1028

WALKER CONSULTANTS

McKIM&CREED
CIVIL ENGINEER
243 NORTH FRONT STREET
WILMINGTON, NORTH CAROLINA
28401
910.343.1048

PROFESSIONAL SEAL

NOT FOR CONSTRUCTION
CLARK NEXSEN CERT NO. 50680 NORTH CAROLINA
NORTH CAROLINA PROFESSIONAL SEAL 024319 ENGINEER JAMES NEWBY WALKER

NC CORPORATE ENGINEERING LICENSE #C-1028

SUBMITTAL
03/29/2019
CONSTRUCTION DOCUMENTS
SUBMITTAL 01

REVISIONS

KEY PLAN

SHEET
FOURTH LEVEL PLAN

MH104

DESIGN: JRS
DRAWN: JRS
REVIEW: JNW

CN 8112

4/15/2019 11:42:58 AM
C:\Revit Projects\8112_UNCW Parking Deck II M17_jsullivan\GHKEZ.rvt

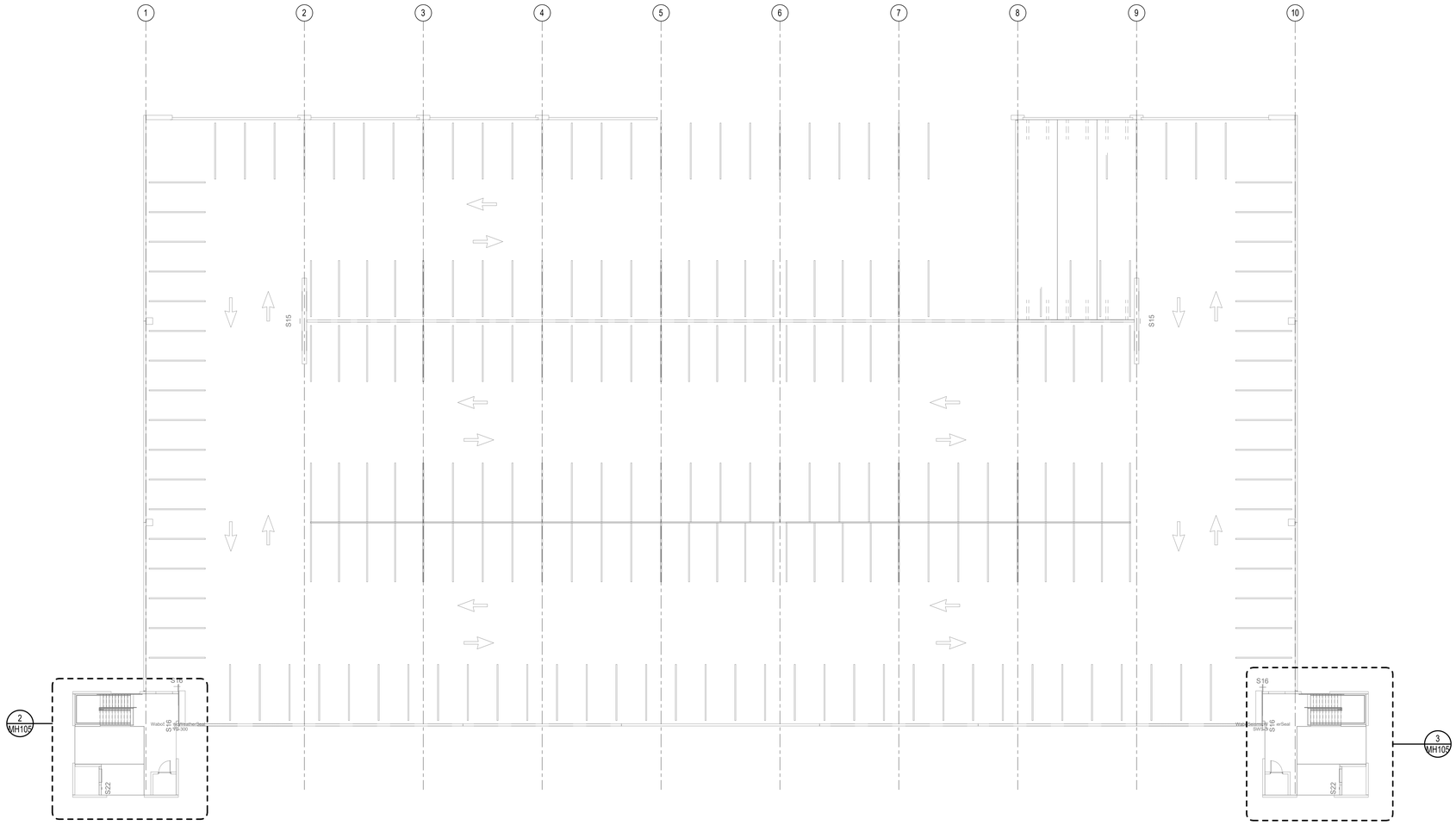

FIFTH LEVEL PLAN
1/16" = 1'-0"

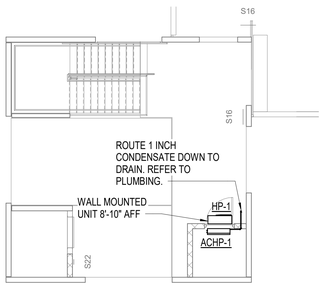

2 WEST STAIR TOWER 103
1/8" = 1'-0"

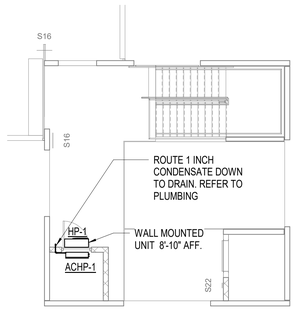

3 EAST STAIR TOWER 102
1/8" = 1'-0"

COOLING SET POINT TO BE NO COOLER THAN 80 F. SUPPLY AIR FROM INDOOR UNIT TO BE DIRECTED AWAY FROM EQUIPMENT AND ALL HARD SURFACES.

UNIVERSITY of NORTH CAROLINA WILMINGTON
601 SOUTH COLLEGE ROAD
WILMINGTON, NORTH CAROLINA 28403

PARKING DECK II - SOUTH CAMPUS
RIEGEL ROAD

SCO ID NUMBER: 19226
CODE: 441828
ITEM: 301

CONTRACTOR
Balfour Beatty Construction

DESIGNER
CLARKNEXSEN
1523 ELIZABETH AVENUE, SUITE 300
CHARLOTTE, NORTH CAROLINA 28204
704·377·8800

CLARK NEXSEN LICENSE NUMBER: C-1028

WALKER CONSULTANTS

McKIM&CREED
CIVIL ENGINEER
243 NORTH FRONT STREET
WILMINGTON, NORTH CAROLINA
28401
910.343.1048

PROFESSIONAL SEAL
NOT FOR CONSTRUCTION
CLARK NEXSEN NORTH CAROLINA CERT NO. 50680
JAMES R. SULLIVAN PROFESSIONAL SEAL 024319 ENGINEER
NC CORPORATE ENGINEERING LICENSE #C-1028

SUBMITTAL
03/29/2019
CONSTRUCTION DOCUMENTS SUBMITTAL 01

REVISIONS

KEY PLAN

SHEET
FIFTH LEVEL PLAN

MH105

DESIGN: JRS
DRAWN: JRS
REVIEW: JNW

CN 8112

4/15/2019 11:42:59 AM
C:\Revit Projects\8112_UNCW Parking Deck II M17_jsullivanGHXEZ.rvt

ELECTRICAL SYMBOL LEGEND

SYMBOL	GENERAL
1	NOTE REFERENCE NUMBER.
ELECT ROOM 101	TYPICAL ROOM NAME AND NUMBER FOR COMMON SPACES.
1 E-500	INDICATES DETAIL NUMBER DETAIL REFERENCE BUBBLE INDICATES SHEET ON WHICH DETAIL IS LOCATED
LIGHTING	
A	LUMINAIRE TYPE, SEE LUMINAIRE SCHEDULE ON DRAWING E-700.
	LIGHT EMITTING DIODE (LED) LIGHTING FIXTURE. INDICATES BRACKET, WALL MOUNTED FIXTURES).
	LED LIGHTING FIXTURE (INDICATES BRACKET, WALL MOUNTED FIXTURES).
	EMERGENCY LED LIGHTING FIXTURE (INDICATES BRACKET, WALL MOUNTED FIXTURES).
	LED EXIT LIGHTING FIXTURE. ARROW, WHEN USED, INDICATES DIRECTION. (INDICATES BRACKET, WALL MOUNTED FIXTURES). FILLED IN QUADRANT(s) OF SYMBOL INDICATES NUMBER AND ORIENTATION OF ILLUMINATED FACES. CONNECT EXIT LIGHT FIXTURE AHEAD OF LOCAL CONTROL.
S	SINGLE POLE SWITCH.
S3	THREE-WAY SWITCH
SOS	WALL MOUNT OCCUPANCY SENSOR SWITCH
SK	KEYED SWITCH.
ST	SINGLE-POLE TIMER SWITCH WITH 2 MINUTE FLICKER WARNING PRIOR TO TURN OFF. ADJUSTABLE FROM 1 MINUTE TO 18 HOURS. NSI INDUSTRIES #SS20F.
SS	TWO-SINGLE POLE SWITCHES FOR DUAL LEVEL LIGHTING CONTROL. SEE PLANS FOR SWITCHING ARRANGEMENT.
S3S3	TWO THREE-WAY SWITCHES, FOR DUAL LEVEL LIGHTING CONTROL. SEE PLANS FOR SWITCHING ARRANGEMENT.
OS	CEILING MOUNTED OCCUPANCY SENSOR. SENSORS SHALL BE WIRED IN PARALLEL IN AREAS CONTAINING MULTIPLE SENSORS. SUBSCRIPTS, WHEN USED, INDICATE THE FOLLOWING: (BLANK) = DUAL TECHNOLOGY (INFRARED AND ULTRA-SONIC) PI = VACANCY SENSOR, PASSIVE INFRARED V = VACANCY SENSOR, DUAL TECHNOLOGY
DS	CEILING MOUNTED DAYLIGHT HARVESTING CONTROL SENSOR
PC	PHOTOCELL
LC	LIGHTING CONTACTOR FOR CONTROL OF EXTERIOR LIGHTING AND SIGN LIGHTING. SEE DETAIL 1 ON DRAWING E-700.
TC	TIMECLOCK. SEE DETAIL 1 ON DRAWING E-700.
POWER DEVICES	
	WHEN USED: WP = WEATHERPROOF RECEPTACLE. RECEPTACLE SHALL BE LISTED WEATHER-RESISTANT TYPE AND PROVIDED WITH WHILE-IN-USE EXTRA DUTY RATED COVER.
	SINGLE RECEPTACLE, 20A, 125 VAC, MOUNT AT 18" AFF, UON.
	WALL MOUNTED DUPLEX CONVENIENCE RECEPTACLE, 20A, 125 VAC. MOUNT AT 18" AFF, UON.
	WALL MOUNTED DUPLEX CONVENIENCE RECEPTACLE WITH INTEGRAL GROUND FAULT PROTECTION, 20A, 125 VAC. MOUNT AT 18" AFF, UON.
	WALL MOUNTED DOUBLE DUPLEX CONVENIENCE RECEPTACLE, 20A, 125 VAC, MOUNT AT 18" AFF, UON.
	WALL MOUNTED SPECIAL PURPOSE RECEPTACLE. DESCRIPTION AS INDICATED ON PLANS, MOUNT AT 18" AFF, UON.
EVC	ELECTRIC VEHICLE CHARGER, 208V, 2-POLE, DUAL CONNECTOR PEDESTALS. PROVIDE WITH INTERNAL GROUND FAULT AND SURGE PROTECTION. ASSEMBLY SHALL BE SUITABLE FOR OUTDOOR INSTALLATION (NEMA 3R). PROVIDE WITH CELLULAR COMMUNICATION POWERCHARGE NETWORKED COMERCIAL ELECTRIC VEHICLE CHARGER, MODEL #P20-DPN. OR APPROVED EQUAL. DUAL STATION REQUIRES TWO FEEDS.
EVC F	ELECTRIC VEHICLE CHARGER FUTURE CONNECTION. PROVIDE TWO WEATHER PROOF JUNCTION BOXES, MOUNT SIDE BY SIDE AT 10" AFF. EXTEND 3/4" CONDUITS FROM EACH JUNCTION BOX TO PANEL 1NL1 SECTION II, PROVIDE PULL STRING, BLANK COVER PLATE AND LABEL FOR "FUTURE ELECTRIC VEHICLE CHARGER".
DISTRIBUTION	
	PANELBOARD - 480Y/277V 3 PH, 4W. DASHED OUTLINE INDICATED REQUIRED WORKING SPACE CLEARANCE. SEE POWER RISER AND PANELBOARD SCHEDULES FOR SPECIFICS. MOUNTING HEIGHT SHALL BE 72" TO TOP OF PANELBOARD CAN. MOUNTING HEIGHTS SHALL BE CONSISTENT THROUGHOUT BUILDING.
	PANELBOARD - 208Y/120V 3 PH, 4W. DASHED OUTLINE INDICATED REQUIRED WORKING SPACE CLEARANCE. SEE POWER RISER AND PANELBOARD SCHEDULES FOR SPECIFICS. MOUNTING HEIGHT SHALL BE 72" TO TOP OF PANELBOARD CAN. MOUNTING HEIGHTS SHALL BE CONSISTENT THROUGHOUT BUILDING.
XFMR	PAD MOUNTED DRY-TYPE TRANSFORMER, U.O.N. 480 VOLT PRIMARY, 208Y/120V SECONDARY. KVA RATING AS INDICATED ON PLANS.
M	METER.
SPD	SURGE PROTECTIVE DEVICE.
	GROUNDING ELECTRODE SYSTEM. SEE DETAIL 1 ON DRAWING E-500.
MGB	GROUND BUSBAR FOR CONNECTION TO BUIDLING GROUNDING ELECTRODE SYSTEM. MOUNT 18" AFF TO TOP. SEE DETAIL 6 ON DRAWING E-500 FOR CONFIGURATION REQUIREMENTS.
	GROUND TEST WELL. SEE DETAIL 3 ON DRAWING E-500.
	CONNECTION TO GROUNDING ELECTRODE. SEE DETAILS 1 AND 2 DRAWING E-500.

SYMBOL	SECURITY
C	CEILING MOUNTED SECURITY CAMERA . AXIS P3375-VE. PROVIDE WITH PENDANT MOUNTING KIT AND CONDUIT REQUIRED TO LOCATE CAMERA LENS TO INVERTED TEES HEIGHT OF DECK STRUCTURE. REFER TO DETAIL 10, DRAWING E-500.
WIRING, CONDUIT AND RACEWAY	
	BRANCH CIRCUIT OR FEEDER WIRING IN CONDUIT RUN CONCEALED IN PARKING GARAGE STRUCTURE. REFER TO SPECIFICATIONS FOR CONDUIT TYPE REQUIRED. REFER TO PANEL SCHEDULES FOR CONDUIT AND WIRE SIZES, U.O.N.
CKT	HOMERUNS TO PANEL. PANEL AND BRANCH CIRCUIT AS INDICATED. SUFFIXES, WHEN USED: (SC)- SPLIT CIRCUIT. CIRCUIT HAS MULTIPLE HOMERUN DESIGNATIONS. THE ELECTRICAL CONTRACTOR SHALL INSTALL ONLY ONE CONDUCTOR PER CIRCUIT BREAKER POLE. SPLICES NECESSARY TO COMPLY WITH THIS REQUIREMENT SHALL BE MADE IN A SEPARATE SPLICE BOX OUTSIDE THE PANELBOARD ENCLOSURE.
MISCELLANEOUS TELECOMMUNICATIONS EQUIPMENT	
TMGB	GROUND BUSBAR MOUNTED 18" AFF MEASURED TO TOP. SEE DETAIL 5 ON DRAWING E-500 FOR CONFIGURATION REQUIREMENTS.
SGB	GROUND BUSBAR MOUNTED 18" AFF MEASURED TO TOP. SAME AS TMGB EXCEPT 1/4" x 4" x 12". REFER TO DETAIL 5 ON DRAWING E-500 FOR CONFIGURATION REQUIREMENTS.
	3/4" NON-FIRE RATED PLYWOOD HORIZONTALLY COVERED. PLYWOOD SHALL BE VOID FREE AND FINISHED ON ONE SIDE, MOUNTED 4 INCHES ABOVE FINISH FLOOR AROUND THE TOTAL PERIMETER OF THE ROOM. THE NON-FIRE RATED PLYWOOD HAS AT LEAST TWO COATS OF FIRE RESISTANT WHITE PAINT. PAINT TO BE APPLIED ON ALL SIX SIDES WITH A MINIMUM OF TWO COATS. THE PLYWOOD SHALL BE MOUNTED AT EIGHT (8) FEET HIGH AND FOUR (4) FEET WIDE AROUND THE ENTIRE TELECOMMUNICATIONS ROOM. PROVIDE SUFFICIENT QUANTITY OF PLYWOOD TO COVER ALL WALLS OF THE TELECOM ROOM COMPLETELY AS INDICATED ON DETAIL 3 DRAWING E-101. CUT TO FIT ROOM PERIMETER AS REQUIRED.
PARKING ASSIST SYSTEM	
POSU E	SURFACE CEILING MOUNTED POWER SUPPLY FOR PARKING MANAGEMENT SYSTEM WITH EQUIPMENT POWER CONNECTION AS NOTED ON PLANS. PRORIDE (1) 1-1/4" EMPTY CONDUIT HOMERUN DOWN TO PARKING MANAGEMENT SYSTEM SERVER IN TELECOM ROOM. POWER SUPPLY, SYSTEM COMPONENTS AND COMMUNICATION CABLING BY OTHERS.
EQUIPMENT CONNECTIONS	
E	EQUIPMENT CONNECTION. SEE EQUIPMENT CONNECTION SCHEDULE ON DRAWING E-700 FOR CONNECTION REQUIREMENTS.
J J J	STANDARD SIZE WALL OR CEILING MOUNTED JUNCTION BOX, UNLESS OTHERWISE NOTED.
NEMA 3R, L — 3P 30 NF	UNFUSED DISCONNECT SWITCH. RATINGS AND CHARACTISTICS AS INDICATED ON EQUIPMENT SCHEDULE. WHEN USED: NEMA 3R= NEMA 3R ENCLOSURE REQUIRED L = PERMANENT PROVISIONS FOR LOCKING DISCONNECT IN OPEN POSITION. 3P = NUMBER OR POLES 30 = DEVICE RATING NF = NON-FUSED
NEMA 3R, L — 3P 30 20	FUSED DISCONNECT SWITCH. RATINGS AND CHARACTISTICS AS INDICATED ON EQUIPMENT SCHEDULE. WHEN USED: NEMA 3R= NEMA 3R ENCLOSURE REQUIRED L = PERMANENT PROVISIONS FOR LOCKING DISCONNECT IN OPEN POSITION. 3P = NUMBER OR POLES 30 = DEVICE RATING 20 = FUSE RATING, OR "FPN" = FUSE PER NAMEPLATE
L	DISCONNECT SWITCH PROVIDED WITH EQUIPMENT. NEMA 1 ENCLOSURE FOR INDOOR INSTALLATIONS, AND NEMA 3R ENCLOSURE FOR EXTERIOR INSTALLATIONS.
STS	THERMAL SWITCH. HORSE POWER RATED.

SYMBOL	TELECOM DEVICE OUTLETS
	TELECOMMUNICATIONS SCOPE NOTES: 1. FURNISH AND INSTALL ALL TELECOM NETWORK EQUIPMENT, JACKS, FACEPLATES, PATCH PANELS, CABLING, CABLE TERMINATIONS, AND PERFORM TESTING. TELECOMMUNICATIONS CABINET'S UPS WILL BE PROVIDED BY UNCW-IT. 2. INFRASTRUCTURE INCLUDING JUNCTION BOXES, BLANK PLATES, CONDUIT RACEWAY, CONDUIT BUSHINGS, EQUIPMENT GROUND BARS, AND OTHER COMPONENTS OF THE TELECOMMUNICATIONS PATHWAY SYSTEM SHALL BE FURNISHED AND INSTALLED BY THE CONTRACTOR.
	DATA OUTLET BOX, MOUNTED 1'-6" AFF, UON. PROVIDE TWO-GANG, 2-1/8" DEEP x 4-11/16" BOX AND GASKETED STAINLESS STEEL COVERPLATE WITH 1" CONDUIT FROM OUTLET LOCATION SHOWN TO TELECOM ROOM.
	VOICE OUTLET BOX, MOUNTED 1'-6" AFF, UON.. PROVIDE TWO-GANG, 2-1/2" DEEP x 4-11/16" SQUARE BOX AND GASKETED STAINLESS STEEL COVERPLATE WITH 1" CONDUIT FROM OUTLET LOCATION SHOWN TO TELECOM ROOM.
E	EMERGENCY PHONE. INSTALL WALL MOUNTED EMERGENCY UNIT AT LOCATIONS INDICATED ON DRAWINGS SO THAT PUSH BUTTON IS 46" ABOVE FINISHED FLOOR. UNIT SHALL BE FED FROM BOTTOM. COORDINATE SYSTEM CONNECTION WITH EQUIPMENT MANUFACTURER. TEST AND VERIFY SYSTEM OPERATION PER MANUFACTURER'S RECOMMENDATIONS. PROVIDE COMPLETE WALL MOUNT CALL 24 WIRELESS CALL BOX SYSTEM INCLUDING STROBE AND DECALS. CALL BOX - MODEL C24-10A-MU-UHF AC MARK III WIRELESS. STROBE/LOCATOR LIGHT - MODEL C24-000-568, T-MOUNT - FLAT SURFACE DECAL, BOX FRONT 10" - C24-000-080. DECAL, SIDE ASSISTANCE C24-000-092. PHONE SUPPLIER SHALL PROVIDE SET-UP, PROGRAMMING AND TESTING TO INTERFACE WITH EXISTING UNCW C24 TEMPLATE. MOUNT STROBE / LOCATOR LIGHT ABOVE CALLBOX AT 96" AFF TO THE CENTER.
SITE	
EXISTING: T / PROVIDE: T T-P	UTILITY PADMOUNTED TRANSFORMER, T-P INDICATES BUILDING TRANSFORMER IS FEEDING.
S S SW	UTILITY PADMOUNTED SWITCH
E E	ELECTRICAL HANDHOLE. REFER TO HANDHOLE DETAIL DRAWING ES501.
C C	TELECOMMUNICATIONS HANDHOLE.
E — E	UNDERGROUND ELECTRICAL BRANCH CIRCUIT. PROVIDE 1-1" PVC CONDUIT, UON. INSTALL 30" BELOW GRADE.
MV	UNDERGROUND MEDIUM VOLTAGE ELECTRICAL CABLE BY UTILITY COMPANY.
UE	UNDERGROUND ELECTRICAL DUCTBANK. REFER TO DUCTBANK DETAIL DRAWING ES501.
UT	UNDERGROUND TELECOMMUNICATIONS DUCTBANK. REFER TO DUCTBANK DETAIL DRAWING ES501.
UL	UNDERGROUND LIGHTING DUCTBANK. PROVIDE 1-1-1/2" PVC CONDUIT, UON. INSTALL 30" BELOW GRADE.
E B	POLE MOUNTED PARKING DECK LIGHTING FIXTURE. SUBSCRIPT "E" INDICATES FIXTURE IS CONNECTED TO EMERGENCY CIRCUIT. SUBSCRIPT INDICATES FIXTURE TYPE. SEE LUMINAIRE SCHEDULE ON DRAWING E-700.
P	POLE MOUNTED SITE LIGHTING FIXTURE. SUBSCRIPT INDICATES FIXTURE TYPE. SEE LUMINARE SCHEDULE ON DRAWING E-700 AND POLE DETAILS DRAWING ES502.
	DUCTBANK DETAIL. REFER TO DRAWING ES501 FOR DUCTBANK CONFIGURATION AND TYPICAL DETAIL AND TO DRAWING ES101 FOR DUCTBANK CONDUIT SCHEDULE.
	POINT OF CONNECTION NEW-TO-EXISTING. PROVIDE MATERIAL AND LABOR REQUIRED TO MAKE CONNECTION.
ET	EXISTING RELOCATED EMERGENCY TELEPHONE. REFER TO DETAIL 6/ES501 FOR BASE, CONDUIT AND OTHER REQUIREMENTS.

GENERAL NOTES

1. DRAWINGS ARE DIAGRAMMATIC AND INDICATE THE GENERAL ARRANGEMENT OF DEVICES ONLY.
2. TERMINALS/LUGS SHALL BE 60/75 DEGREE RATED.
3. LIGHT SWITCHES SHALL BE MOUNTED A MINIMUM OF 6" FROM EDGE OF DOOR FRAME, MAXIMUM OF 12". FOR EXCEPTIONS, CONTACT ARCHITECT PRIOR TO INSTALLATION.
4. WHERE A HOMERUN IS SHOWN, THE CIRCUIT SHALL BE INSTALLED IN A DEDICATED RACEWAY (DO NOT COMBINE WITH OTHER CIRCUITS). WHERE A CIRCUIT-HOMERUN IS NOT SHOWN, COMBINE CIRCUITS IN ACCORDANCE WITH THE NEC AS FOLLOWS:
   - SINGLE PHASE CIRCUITS SHALL HAVE A DEDICATED NEUTRAL.
   - A MAXIMUM OF THREE 20A, 1-POLE BRANCH CIRCUITS MAY BE COMBINED IN A COMMON HOMERUN FOR A TOTAL OF SIX CURRENT CARRYING CONDUCTORS IN A SINGLE RACEWAY. SHARING NEUTRAL NOT ALLOWED.
   - BRANCH CIRCUITS LARGER THAN 20A SHALL BE SEPARATELY HOMERUN TO PANEL.
5. CONDUCTORS FOR BRANCH CIRCUITS SHALL BE SIZED TO PREVENT VOLTAGE DROP EXCEEDING 3% AT THE FARTHEST POINT.
6. EXTERIOR UNDERGROUND ELECTRICAL BRANCH CIRCUITS SHALL UTILIZE MINIMUM CONDUCTOR SIZE #10 AWG AND MINIMUM CONDUIT SIZE 1" UNLESS OTHERWISE NOTED.
7. THE UPPER CASE SUFFIX "SC" AFTER A BRANCH CIRCUIT HOMERUN DESIGNATION INDICATES A "SPLIT CIRCUIT" WHICH MEANS THE HOMERUN ORIGINATES FROM MULTIPLE LOCATIONS. INSTALL ONLY ONE CONDUCTOR PER CIRCUIT BREAKER POLE. SPLICES NECESSARY TO COMPLY WITH THIS REQUIREMENT SHALL BE MADE IN A SEPARATE SPLICE BOX OUTSIDE THE PANELBOARD ENCLOSURE.
8. PROVIDE HOUSEKEEPING PADS FOR INDOOR FLOOR MOUNTED EQUIPMENT.
9. TELECOM OUTLET RACEWAYS SHALL BE FITTED WITH PLASTIC BUSHINGS AT EACH END BEFORE ANY CABLING IS INSTALLED.
10. UNLESS OTHERWISE NOTED ON THE ELECTRICAL CONTRACT DRAWINGS OR SPECIFICATIONS, MOUNTING HEIGHTS SHALL BE AS NOTED ON ARCHITECTURAL PLANS.
11. WHEN SHOWN ADJACENT TO ELECTRICAL DEVICES THE FOLLOWING SUBSCRIPTS SHALL BE DEFINED AS FOLLOWS:
    WP = WEATHERPROOF
    +72" = MOUNTING HEIGHT IN INCHES MEASURED TO TOP OF DEVICE, UON.
12. CONDUITS SHALL CONTAIN A GREEN COLORED EQUIPMENT GROUNDING CONDUCTOR PROVIDING CONTINUITY TO BOXES, DEVICES AND LUMINAIRES.
13. AT STAIRS AND ELEVATOR TOWERS RUN CONDUITS BELOW SLAB AND FROM BOTTOM UP AND DO NOT CROSS EXPANSION JOINTS AT SUPPORTED TIERS, UNLESS OTHERWISE NOTED. DO NOT ROUTE VERTICAL CONDUIT RISERS THROUGH EXPANSION JOINTS.
14. PROVIDE CONDUIT EXPANSION FITTINGS FOR CONDUITS THAT CROSS EXPANSION JOINT AT LOCATIONS REQUIRED.
15. DO NOT ENCASE CONDUIT IN SLAB ON GRADE. INSTALL CONDUIT BELOW SLAB ON GRADE AND GRADE BEAMS.
16. PROVIDE HOT DIPPED GALVANIZED STEEL GUARDS AROUND JUNCTION BOXES, CONDUITS AND OTHER EQUIPMENT WHICH MAY BE EXPOSED TO POSSIBLE BUMPER DAMAGE.
17. FERROUS RACEWAYS, BOXES, CABINETS, ELBOWS, COUPLINGS, FITTINGS, SUPPORTS, AND SUPPORT HARDWARE SHALL BE OF MATERIAL SUITABLE FOR THE ENVIRONMENT IN WHICH THEY ARE TO BE INSTALLED, AND SHALL BE SUITABLY PROTECTED AGAINST CORROSION BY CORROISION-RESISTANT MATERIAL IN COMPLIANCE WITH NEC AND SPECIFICATION SECTION 260533.
18. SURFACE MOUNTED BOXES, RACEWAYS, AND FITTINGS SHALL BE MOUNTED SO THAT THERE IS AT LEAST A 1/4 INCH AIRSPACE BETWEEN IT AND THE CONCRETE WALL OR CEILING.

PERFORMANCE REQUIREMENTS

A. SEISMIC-RESTRAINT LOADING:
1. SITE CLASS AS DEFINED IN THE IBC: AS INDICATED ON STRUCTURAL DRAWINGS.
2. ASSIGNED SEISMIC USE GROUP OR BUILDING CATEGORY AS DEFINED IN THE IBC: AS INDICATED ON STRUCTURAL DRAWINGS.
   A. COMPONENT IMPORTANCE FACTOR: IN ACCORDANCE WITH ASCE7.
   B. COMPONENT RESPONSE MODIFICATION FACTOR: IN ACCORDANCE WITH ASCE7.
   C. COMPONENT AMPLIFICATION FACTOR: IN ACCORDANCE WITH ASCE7.
3. DESIGN SPECTRAL RESPONSE ACCELERATION AT SHORT PERIODS (0.2 SECOND): 0.228G
4. DESIGN SPECTRAL RESPONSE ACCELERATION AT 1.0-SECOND PERIOD: 0.144G

B. LIFE SAFETY SYSTEM:
1. LIFE-SAFETY LIGHTING, EMERGENCY LIGHTING PANELBOARD AND BATTERY INVERTER, A COMPONENT IMPORTANCE FACTOR OF 1.5 SHALL BE ASSIGNED. NON-LIFE-SAFETY SYSTEMS WILL BE ASSIGNED AN IP OF 1.0.

C. LIGHT POLES:
1. BASED ON AASHTO LTS-5 SPECIFICATION AND ASCE 7-05, THE WIND SPEED IN WILMINGTON, NC IS 131 MPH.

REFER TO SPECIFICATION SECTION 012300 AND DRAWING G001 FOR PROJECT ALTERNATES

ABBREVIATIONS

A	AMPERE	KVA	KILOVOLT AMPERE
AF	AMPERE FRAME	LTG	LIGHTING
AFF	ABOVE FINISHED FLOOR	MC	METAL CLAD CABLE
AFG	ABOVE FINISHED GRADE	MCA	MINIMUM CIRCUIT AMPACITY
AT	AMPERE TRIP	MCB	MAIN CIRCUIT BREAKER
ATL	ACROSS THE LINE	MGMT	MANAGEMENT
ATS	AUTOMATIC TRANSFER SWITCH	MLO	MAIN LUG ONLY
AWG	AMERICAN WIRE GAUGE	MOCP	MAXIMUM OVERCURRENT PROTECTION
BG	BELOW GRADE	MSB	MAIN SWITCHBOARD
BK/BD	BACKBOARD	MT	MOUNT
BLDG	BUILDING	MTD	MOUNTED
BRKR	BREAKER	MTG	MOUNTING
B.S.	BUSSED SPACE	MV	MEDIUM VOLTAGE
C	CONDUIT	NAS	NON-AUTOMATIC SWITCH
CATV	CABLE TELEVISION	NEC	NATIONAL ELECTRICAL CODE
CB	CIRCUIT BREAKER	NEU	NEUTRAL
CD	CANDELA	NF	NON-FUSED
CKT	CIRCUIT	NO	NORMALLY OPEN
CLG	CEILING	OC	ON CENTER
CORR	CORRIDOR	P	POLE
CTLR	CONTROLLER	PB	PULL BOX
dBA	DECIBELS ADJUSTED	PH	PHASE
DISC	DISCONNECT	PNL	PANEL
DIST.	DISTRIBUTION	PSI	POUNDS PER SQUARE INCH
DWG	DRAWING	PVC	POLY VINYL CHLORIDE
EB	ELECTRONIC BALLAST	QTY	QUANTITY
EC	EMPTY CONDUIT	RECEPT	RECEPTACLE
ECB	ENCLOSED CIRCUIT BREAKER	REQ'D	REQUIRED
E.F.	EACH FACE	RMC	RIGID METAL CONDUIT
ELEV.	ELEVATOR	SC	SPLIT CIRCUIT
EMER.	EMERGENCY	SCO	STATE CONSTRUCTION OFFICE
EMT	ELECTRICAL METALLIC TUBING	SF	SUPPLY FAN
EQ.	EQUAL	SGB	SECURITY ROOM GROUND BAR
EQUIP	EQUIPMENT	S/N	SOLID NEUTRAL
E.W.	EACH WAY	SPD	SURGE PROTECTION DEVICE
FACU	FIRE ALARM CONTROL UNIT	STD	STANDARD
FLA	FULL LOAD AMPS	SW	SWITCH
FLUOR	FLUORESCENT	SWBD	SWITCHBOARD
FTC	FIRE TERMINAL CABINET	TC	TIME CLOCK
GB	GROUND BAR	TEL	TELEPHONE
GEN	GENERATOR	TGB	TELEPHONE TERMINAL GROUND BAR
GFI	GROUND FAULT INTERRUPTER	TMGB	TELECOMMUNICATIONS MAIN GROUND BAR
GFP	GROUND FAULT PROTECTION	TTB	TELEPHONE TERMINAL BOARD
GND	GROUND	TV	TELEVISION
GRS	GALVANIZED RIGID STEEL	UL	UNDERWRITER'S LABORATORIES, INC.
HDG	HOT DIPPED GALVANIZED	UNCW	UNIVERSITY OF NORTH CAROLINA WILMINGTON.
HP	HORSEPOWER	UPS	UNINTERRUPTIBLE POWER SUPPLY
HT.	HEIGHT	UON	UNLESS OTHERWISE NOTED
ID	INSIDE DIAMETER	UT	UNDERGROUND TELEPHONE
IMC	INTERMEDIATE METAL CONDUIT	V	VOLTS
IT	INFORMATION TECHNOLOGY	VAC	VOLTS ALTERNATING CURRENT
KAIC	THOUSAND AMP SYMMETRICAL INTERRUPTING CAPACITY RMS	VDC	VOLTS DIRECT CURRENT
KCMIL	THOUSAND CIRCULAR MILS	W	WIRE
		WP	WEATHERPROOF
		XFMR	TRANSFORMER

UNCW
UNIVERSITY of NORTH CAROLINA WILMINGTON
601 S COLLEGE ROAD
WILMINGTON, NORTH CAROLINA 28403

PARKING DECK II AND SURFACE PARKING (DESIGN-BUILD)
SOUTH CAMPUS - 4965 RIEGEL ROAD

SCO ID NUMBER: 18-19226-01A
CODE: 41828
ITEM: 301

CONTRACTOR
Balfour Beatty Construction

DESIGNER

CLARKNEXSEN
1523 ELIZABETH AVENUE, SUITE 300
CHARLOTTE, NORTH CAROLINA 28204
704·377·8800
CLARK NEXSEN LICENSE NUMBER: C-1028

WALKER CONSULTANTS
13860 Ballantyne Corporate Place
Suite 140
Charlotte, NC 28277
T: 704.247.6230
www.walkerconsultants.com
NC License No. F-0518

McKIM&CREED
CIVIL ENGINEER
243 NORTH FRONT STREET
WILMINGTON, NORTH CAROLINA
28401
910.343.1048

PROFESSIONAL SEAL
NOT FOR CONSTRUCTION
CLARK NEXSEN CERT NO. 50680 NORTH CAROLINA
NORTH CAROLINA PROFESSIONAL SEAL 027766 ENGINEER
NC CORPORATE ENGINEERING LICENSE #C-1028

SUBMITTAL
04/15/2019
CONSTRUCTION DOCUMENT SUBMITTAL 01

REVISIONS

KEY PLAN

SHEET
ELECTRICAL LEGEND, NOTES AND ABBREVIATIONS

E-001

DESIGN: WAZ
DRAWN: KAW
REVIEW: WAZ

CN 8112

4/12/2019 2:11:23 PM
C:\Revit Projects\8172_UNCW Parking Deck II E17_Benton.Davis@clarknexsen.com.rvt

DUCTBANK CONDUIT SCHEDULE

TAG	DESCRIPTION
P	600V, 4" WAY–SECONDARY POWER FROM UTILITY TRANSFORMER. REFER TO DRAWING E–600
F/T	4" WAY WITH (3) 1–1/4" ID INNERDUCTS (MAXCELL OR HDPE INNERDUCT) ONE FOR COPPER, ONE FOR FIBER AND ONE SPARE. REFER TO DRAWING E–600
S	4" WAY SPARE FOR FUTURE USE

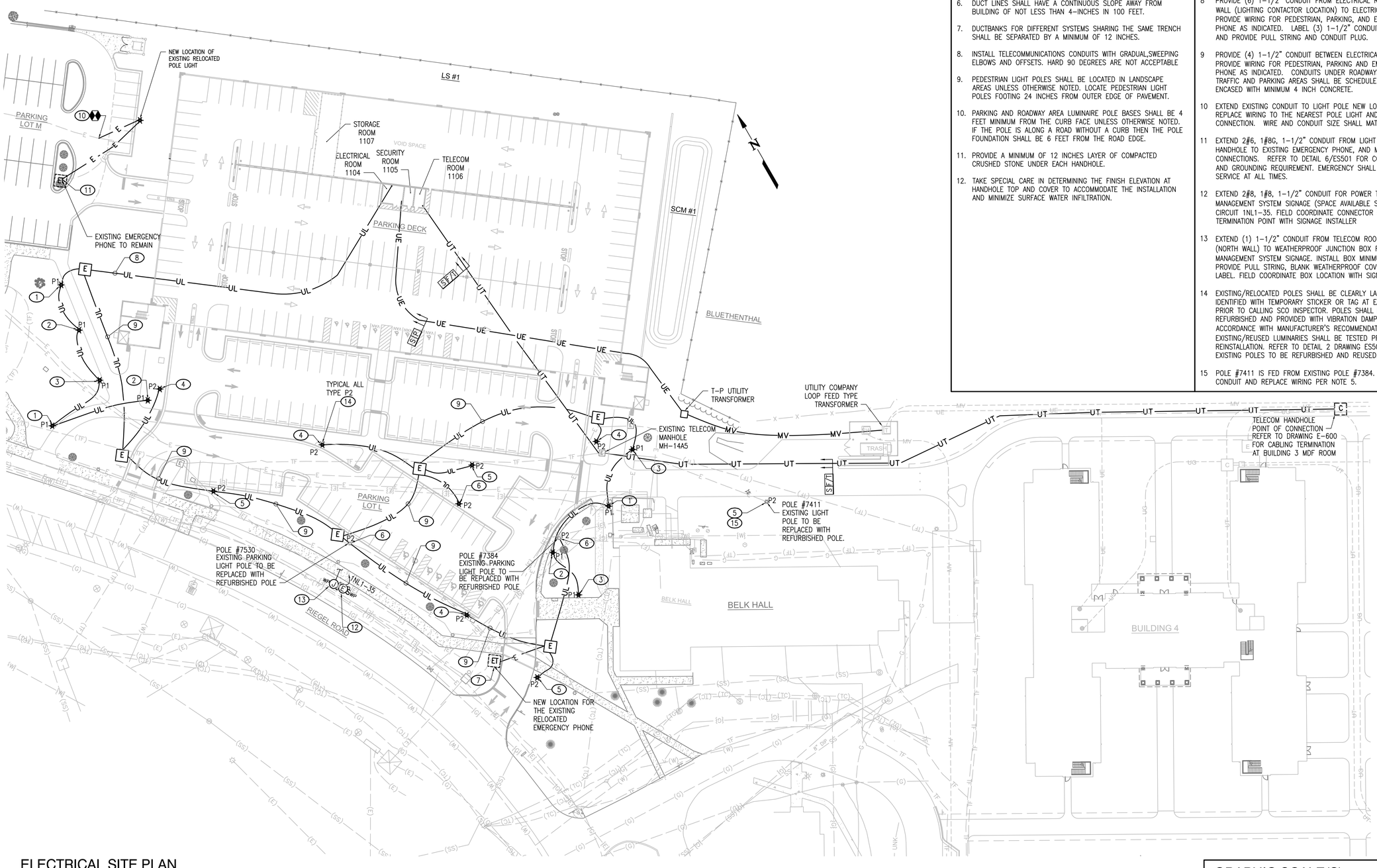

ELECTRICAL SITE PLAN

SCALE: 1" = 30'

GENERAL NOTES

1. COORDINATE UNDERGROUND CONDUIT ROUTINGS IN FIELD AND AVOID INTERFERENCE WITH OTHER TRADES. CONDUITS ARE SHOWN DIAGRAMMATICALLY, FINAL ROUTING TO BE DETERMINED IN THE FIELD.
2. THE MEDIUM VOLTAGE AND PRIMARY DISTRIBUTION SYSTEM PROVIDED BY UTILITY COMPANY SHALL BE UNDERGROUND, AND SHALL INCLUDE MEDIUM VOLTAGE AND PRIMARY CONDUCTORS, CONCRETE PAD, SWITCHES, TRANSFORMERS, GROUNDING AND TERMINATIONS.
3. COORDINATE TRANSFORMER SECONDARY CONDUIT SIZES WITH ELECTRICAL RISER DIAGRAMS AND COORDINATE CONDUIT TERMINATION POINTS WITH PARKING GARAGE FLOOR PLANS BEFORE CONSTRUCTION.
4. PROTECT PARTIALLY COMPLETED DUCT LINES FROM THE ENTRANCE OF DEBRIS AND DIRT WITH SUITABLE CONDUIT PLUGS. AT THE COMPLETION OF EACH SECTION OF DUCT LINE, CONDUIT SHALL BE CLEANED WITH A STIFF BRISTLE BRUSH HAVING THE SAME DIAMETER AS THE CONDUIT AND SHALL BE PULLED THROUGH EACH CONDUIT UNTIL CLEAR, THEN PLUGGED WITH TEMPORARY END PLUGS.
5. PROVIDE PULL STRING IN ALL EMPTY CONDUITS.
6. DUCT LINES SHALL HAVE A CONTINUOUS SLOPE AWAY FROM BUILDING OF NOT LESS THAN 4–INCHES IN 100 FEET.
7. DUCTBANKS FOR DIFFERENT SYSTEMS SHARING THE SAME TRENCH SHALL BE SEPARATED BY A MINIMUM OF 12 INCHES.
8. INSTALL TELECOMMUNICATIONS CONDUITS WITH GRADUAL,SWEEPING ELBOWS AND OFFSETS. HARD 90 DEGREES ARE NOT ACCEPTABLE
9. PEDESTRIAN LIGHT POLES SHALL BE LOCATED IN LANDSCAPE AREAS UNLESS OTHERWISE NOTED. LOCATE PEDESTRIAN LIGHT POLES FOOTING 24 INCHES FROM OUTER EDGE OF PAVEMENT.
10. PARKING AND ROADWAY AREA LUMINAIRE POLE BASES SHALL BE 4 FEET MINIMUM FROM THE CURB FACE UNLESS OTHERWISE NOTED. IF THE POLE IS ALONG A ROAD WITHOUT A CURB THEN THE POLE FOUNDATION SHALL BE 6 FEET FROM THE ROAD EDGE.
11. PROVIDE A MINIMUM OF 12 INCHES LAYER OF COMPACTED CRUSHED STONE UNDER EACH HANDHOLE.
12. TAKE SPECIAL CARE IN DETERMINING THE FINISH ELEVATION AT HANDHOLE TOP AND COVER TO ACCOMMODATE THE INSTALLATION AND MINIMIZE SURFACE WATER INFILTRATION.

(#) NOTES

1. PROVIDE 2#6,1#8G FOR POWER TO SITE PEDESTRIAN LIGHTING. USE CIRCUIT NHDP–7. CONNECT VIA CONTACTOR LC1
2. PROVIDE 2#6, 1#8G FOR POWER TO SITE PEDESTRIAN LIGHTING. USE CIRCUIT NHDP–9. CONNECT VIA CONTACTOR LC1
3. PROVIDE 2#6, 1#8G FOR POWER TO SITE PEDESTRIAN LIGHTING. USE CIRCUIT NHDP–11. CONNECT VIA CONTACTOR LC1
4. PROVIDE 2#6, 1#8G FOR POWER TO SITE PARKING LIGHTING. USE CIRCUIT NHDP–32,34. CONNECT VIA CONTACTOR LC1
5. PROVIDE 2#6, 1#8G FOR POWER TO SITE PARKING LIGHTING. USE CIRCUIT NHDP–34,36. CONNECT VIA CONTACTOR LC1
6. PROVIDE 2#6, 1#8G FOR POWER TO SITE PARKING LIGHTING. USE CIRCUIT NHDP–32,36. CONNECT VIA CONTACTOR LC1
7. PROVIDE 2#6, 1#8G, 1–1/2" CONDUIT FOR POWER TO EXISTING RELOCATED EMERGENCY PHONE. USE CIRCUIT NHDP–30. TEMPORARILY CONNECT RELOCATED EMERGENCE PHONE FROM EXISTING CIRCUIT. EXTEND CONDUIT AND WIRE TO NEW LOCATION. EMERGENCY PHONE SHALL REMAIN IN SERVICE AT ALL TIMES.
8. PROVIDE (6) 1–1/2" CONDUIT FROM ELECTRICAL ROOM NORTH WALL (LIGHTING CONTACTOR LOCATION) TO ELECTRICAL HANDHOLE. PROVIDE WIRING FOR PEDESTRIAN, PARKING, AND EMERGENCY PHONE AS INDICATED. LABEL (3) 1–1/2" CONDUIT AS SPARE, AND PROVIDE PULL STRING AND CONDUIT PLUG.
9. PROVIDE (4) 1–1/2" CONDUIT BETWEEN ELECTRICAL HANDHOLES. PROVIDE WIRING FOR PEDESTRIAN, PARKING AND EMERGENCY PHONE AS INDICATED. CONDUITS UNDER ROADWAYS, HEAVY TRAFFIC AND PARKING AREAS SHALL BE SCHEDULE 80 PVC AND ENCASED WITH MINIMUM 4 INCH CONCRETE.
10. EXTEND EXISTING CONDUIT TO LIGHT POLE NEW LOCATION, REPLACE WIRING TO THE NEAREST POLE LIGHT AND MAKE CONNECTION. WIRE AND CONDUIT SIZE SHALL MATCH EXISTING.
11. EXTEND 2#6, 1#8G, 1–1/2" CONDUIT FROM LIGHT POLE HANDHOLE TO EXISTING EMERGENCY PHONE, AND MAKE CONNECTIONS. REFER TO DETAIL 6/ES501 FOR CONDUIT, BASE AND GROUNDING REQUIREMENT. EMERGENCY SHALL REMAIN IN SERVICE AT ALL TIMES.
12. EXTEND 2#8, 1#8, 1–1/2" CONDUIT FOR POWER TO THE PARKING MANAGEMENT SYSTEM SIGNAGE (SPACE AVAILABLE SIGN). USE CIRCUIT 1NL1–35. FIELD COORDINATE CONNECTOR AND TERMINATION POINT WITH SIGNAGE INSTALLER
13. EXTEND (1) 1–1/2" CONDUIT FROM TELECOM ROOM BACK WALL (NORTH WALL) TO WEATHERPROOF JUNCTION BOX FOR PARKING MANAGEMENT SYSTEM SIGNAGE. INSTALL BOX MINIMUM 10" AFG, PROVIDE PULL STRING, BLANK WEATHERPROOF COVER PLATE AND LABEL. FIELD COORDINATE BOX LOCATION WITH SIGNAGE INSTALLER.
14. EXISTING/RELOCATED POLES SHALL BE CLEARLY LABELED AND IDENTIFIED WITH TEMPORARY STICKER OR TAG AT EACH POLE PRIOR TO CALLING SCO INSPECTOR. POLES SHALL BE REFURBISHED AND PROVIDED WITH VIBRATION DAMPER IN ACCORDANCE WITH MANUFACTURER'S RECOMMENDATION. EXISTING/REUSED LUMINARIES SHALL BE TESTED PRIOR TO REINSTALLATION. REFER TO DETAIL 2 DRAWING ES502 FOR EXISTING POLES TO BE REFURBISHED AND REUSED.
15. POLE #7411 IS FED FROM EXISTING POLE #7384. KEEP EXISTING CONDUIT AND REPLACE WIRING PER NOTE 5.

GRAPHIC SCALE(S)

1"=30' 0 30' 60' 120'

UNCW
UNIVERSITY of NORTH CAROLINA WILMINGTON
601 SOUTH COLLEGE ROAD
WILMINGTON, NORTH CAROLINA 28403

PARKING DECK II AND SURFACE PARKING (DESIGN-BUILD)
SOUTH CAMPUS - 4965 RIEGEL ROAD

SCO ID NUMBER: 18-19226-01A
CODE: 41828
ITEM: 301

CONTRACTOR
Balfour Beatty Construction

DESIGNER

CLARKNEXSEN
1523 ELIZABETH AVENUE, SUITE 300
CHARLOTTE, NORTH CAROLINA 28204
704·377·8800
CLARK NEXSEN LICENSE NUMBER: C-1028

WALKER CONSULTANTS
13860 Ballantyne Corporate Place
Suite 140
Charlotte, NC 28277
T: 704.247.6230
www.walkerconsultants.com
NC License No. F-0518

McKIM&CREED
CIVIL ENGINEER
243 NORTH FRONT STREET
WILMINGTON, NORTH CAROLINA
28401
910.343.1048

PROFESSIONAL SEAL
NOT FOR CONSTRUCTION
CLARK NEXSEN CERT NO. 50680 NORTH CAROLINA
NORTH CAROLINA PROFESSIONAL SEAL 027766 ENGINEER
NC CORPORATE ENGINEERING LICENSE #C-1028

SUBMITTAL
04/15/2019
CONSTRUCTION DOCUMENT SUBMITTAL 01

REVISIONS

KEY PLAN

SHEET
ELECTRICAL SITE PLAN

ES101

DESIGN: WAZ
DRAWN: KAW
REVIEW: WAZ

CN 8112

E:\Projects\8000\8112-UNCW Parking Deck II\CAD UNCW\Sheets\E\ES101.dwg Fri, 12 Apr 2019 - 11:39am Benton.Davis

TRANSFORMER PAD INSTALLATION GENERAL NOTES

1. TRANSFORMER PADS SHALL BE INSTALLED IN A LOCATION TO REMAIN READILY ACCESSIBLE FOR LINE TRUCKS.
2. SOIL UNDERNEATH PADS SHALL BE FREE OF ROOTS AND OTHER ORGANIC MATERIALS AND BE THOROUGHLY TAMPED TO PREVENT WASHING. EXERCISE CARE IN BACKFILLING AND GRADING AROUND PAD.
3. SERVICE CONDUIT SHALL BE LOCATED IN THE EXTREME RIGHT SIDE OF THE SECONDARY COMPARTMENT.
4. ACTUAL PAD DIMENSIONS VARY. CONTRACTOR SHALL COORDINATE REQUIRED PAD DIMENSIONS WITH UTILITY COMPANY.

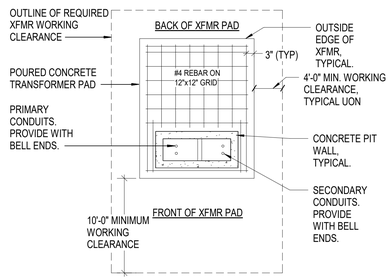

7 SERVICE TRANSFORMER PAD DETAIL PLAN (BY UTILITY COMPANY)
NO SCALE

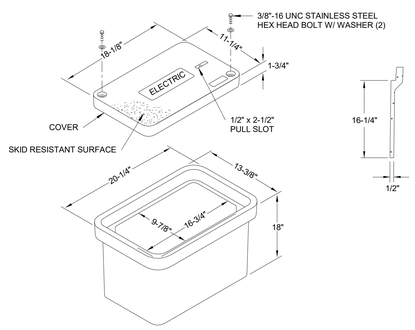

5 HANDHOLE DETAIL
NO SCALE

NOTES:
1. DIMENSIONS ARE TYPICAL. SEE DETAIL 2 THIS SHEET, FOR CONDUIT ARRANGEMENT REQUIREMENTS WITHIN DUCTBANK.
2. MINIMUM EARTH COVERAGE SHALL BE 18-INCHES FOR DUCTBANKS CARRYING CIRCUITS 600V OR LESS.
3. CONDUIT SHALL BE MINIMUM 4" SCHEDULE 40 PVC, UON. USE SCHEDULE 80 PVC FOR INSTALLATION UNDER ROADS AND HEAVY TRAFFIC AREAS.

1 TYPICAL CONCRETE ENCASED DUCTBANK DETAIL
NO SCALE

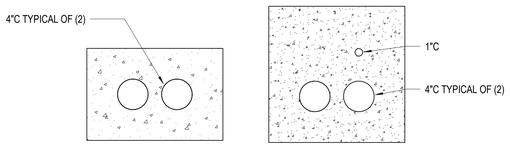

2 DUCTBANK CONFIGURATION DETAILS
NO SCALE

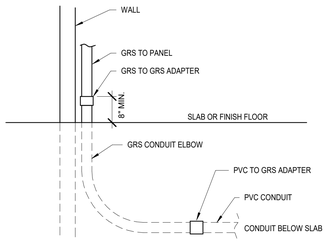

3 CONDUIT TRANSITION DETAIL (THROUGH SLAB)
NO SCALE

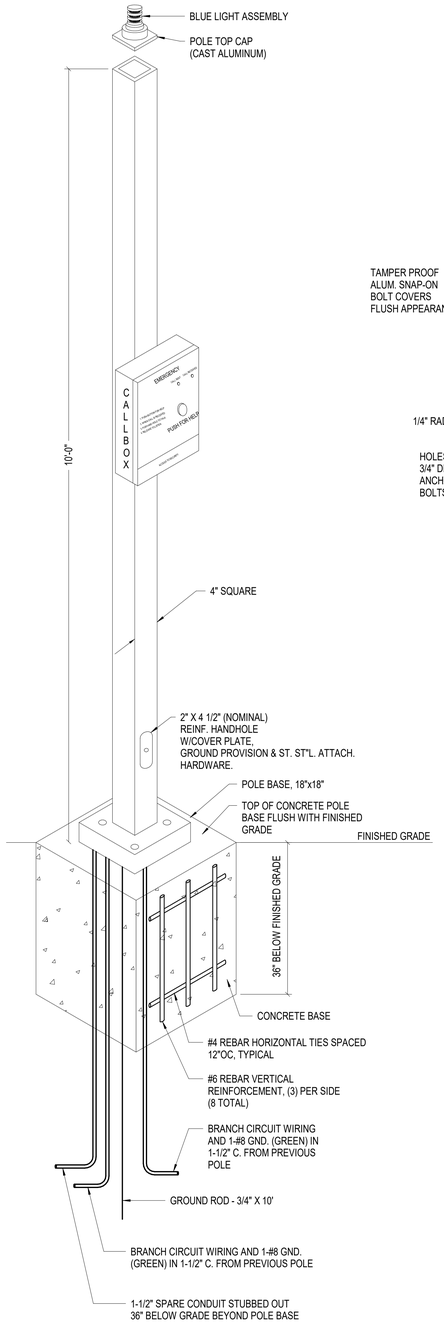

EXISTING:
SQUARE ALUMINUM NON-TAPERED POLE
CATALOG #C24-14A-S410-SSU-TS

SHAFT: MANUFACTURED FROM ALUMINUM ALLOY 6063-T6 WITH AN OVERALL HEIGHT OF 10'-0", A WALL THICKNESS OF 0.125", AND IT SHALL BE 4" SQUARE.

BASE: MANUFACTURED FROM 356-T6 ALUMINUM ALLOY. IT SHALL BE 10" SQUARE AND HAVE A 9" BOLT CIRCLE DIAMETER WITH TAMPER PROOF BOLT COVERS.

FINISH: POLE ASSEMBLY AND ALL CORRESPONDING ACCESSORIES TO RECEIVE A POWDER COAT FINISH. S.W. UHS8-9023 "SMOOTH OYSTER" 80% GLOSS.

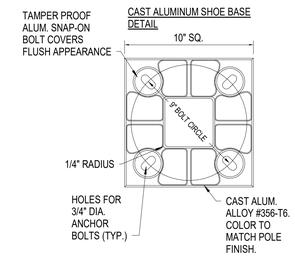

NOTE:
ALL HARDWARE - 18-8 STAINLESS STEEL

ANCHORAGE: 3/#4" DIA. X 18" LONG ANCHOR BOLTS WITH 3" HOOK AND 3" THREAD. MATERIAL PER ASTM F1554GR55/A576, TOP 8" THREADED PORTION GALVANIZED PER ASTM A-153, WITH LW'S, FW'S AND NUTS ALL GALV.

6 EMERGENCY PHONE DETAIL (FOR EXISTING RELOCATED PHONES)
NO SCALE

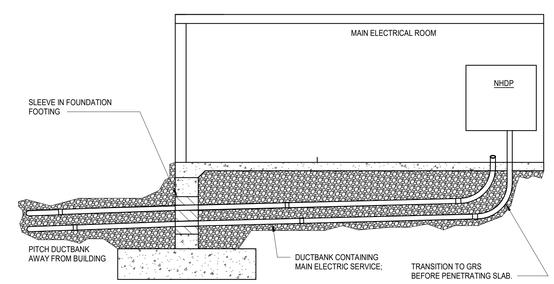

4 SECONDARY DUCTBANK ENTRY INTO GARAGE
NO SCALE

UNCW
UNIVERSITY of NORTH CAROLINA WILMINGTON
601 S COLLEGE ROAD
WILMINGTON, NORTH CAROLINA 28403

PARKING DECK II AND SURFACE PARKING (DESIGN-BUILD)
SOUTH CAMPUS - 4965 RIEGEL ROAD

SCO ID NUMBER: 18-19226-01A
CODE: 41828
ITEM: 301

CONTRACTOR
Balfour Beatty Construction

DESIGNER

CLARKNEXSEN
1523 ELIZABETH AVENUE, SUITE 300
CHARLOTTE, NORTH CAROLINA 28204
704·377·8800
CLARK NEXSEN LICENSE NUMBER: C-1028

WALKER CONSULTANTS
13860 Ballantyne Corporate Place
Suite 140
Charlotte, NC 28277
T: 704.247.6230
www.walkerconsultants.com
NC License No. F-0518

McKIM&CREED
CIVIL ENGINEER
243 NORTH FRONT STREET
WILMINGTON, NORTH CAROLINA
28401
910.343.1048

PROFESSIONAL SEAL
NOT FOR CONSTRUCTION
CLARK NEXSEN CERT NO. 50680 NORTH CAROLINA
NORTH CAROLINA PROFESSIONAL SEAL 027765 ENGINEER
NC CORPORATE ENGINEERING LICENSE #C-1028

SUBMITTAL
04/15/2019
CONSTRUCTION DOCUMENT SUBMITTAL 01

REVISIONS

KEY PLAN

SHEET
ELECTRICAL SITE DETAILS

ES501

DESIGN: WAZ
DRAWN: KAW
REVIEW: WAZ

CN 8112

4/12/2019 2:11:48 PM
C:\Revit Projects\8112_UNCW Parking Deck II E17_Benton.Davis@clarknexsen.com.rvt

NOTE:
1. CONCRETE SHALL HAVE MINIMUM STRENGTH OF 4000 PSI AND MAXIMUM WATER/CEMENT RATIO OF 0.45. CONCRETE EXPOSED ABOVE GRADE SHALL CONTAIN ENTRAINED AIR.
2. ANCHOR BOLTS FOR RELOCATED LIGHT POLES SHALL MATCH DIAMETER AND EMBEDMENT OF EXISTING, AND SHALL BE ASTM F15546R55 (WELDABLE), AT A MINIMUM.

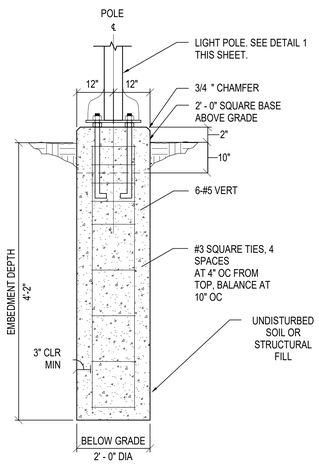

SIDEWALK LIGHT POLE BASE

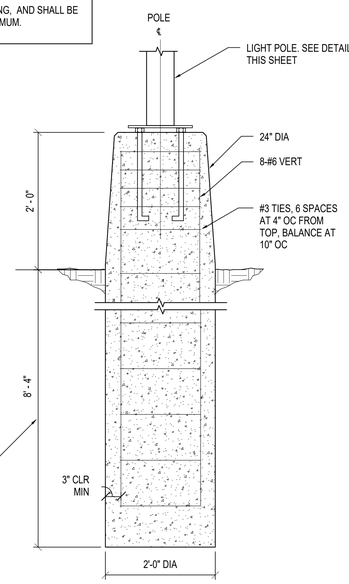

PARKING LIGHT POLE BASE

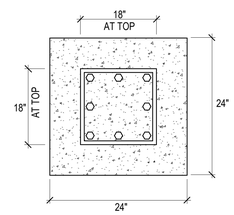

REINF. PLAN - ABOVE GRADE

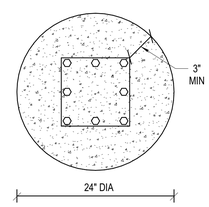

REINF. PLAN - BELOW GRADE

3 POLE BASE STRUCTURAL DETAILS
NO SCALE

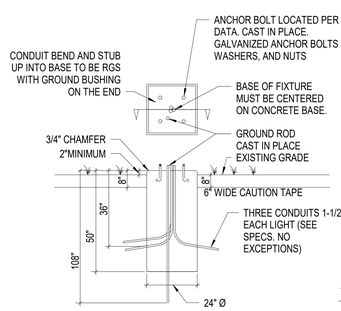

SECTION A-A
BASE DETAIL

NOTE:
1. SEE DETAIL 3 THIS SHEET FOR POLE BASE STRUCTURAL DETAIL

LUMINARIES:
1. LUMINARIES SHALL CONFORM TO EXISTING FIXTURES LED LANTERN STYLE POST TOP FIXTURE, U.L. LISTED 60W, 6000 LUMEN, FROSTED GLASS, 120-277V, COLOR: BLACK COLOR TEMP: 5000K, LIGHT DISTRIBUTION: TYPE V MANUFACTURE: YAORONG MODEL: YR-TP300-W060, PROVIDE WITH ADAPTER FOR 3 INCH POLE, MODEL# 3 SQR-SP-D-UNCW. REFER TO DETAIL. CURRENT VENDOR: GREENLIGHTS, CARY N.C., TEL: 919-766-8900

STANDARD POLE:
1. STANDARDS SHALL BE 14 FEET IN LENGTH U.L. LISTED, COMBINATION TRANSFORMER BASE & TAPERED ALUMINUM POLE, COLOR: BLACK
2. PULL ALL THREE PHASES TO EACH RUN FOR FUTURE USE 3.
3. WIRE LIGHTS TO EACH PHASE IN SEQUENCE: I.E. A-B-C, A-B-C. ECT.

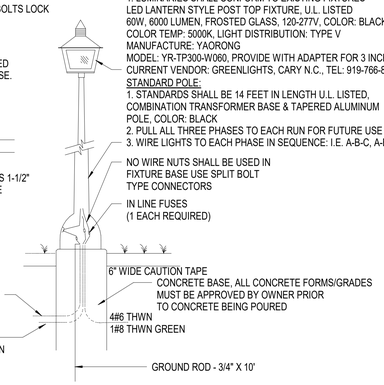

TYPICAL ASSEMBLY

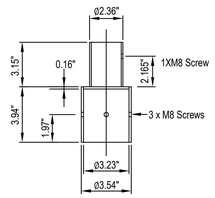

CUSTOMIZED ADAPTOR FOR 3 INCHES POLE
MODULE NUMBER: 3SQR-SP-D-UNCW

1 SIDEWALK LIGHTING DETAILS
NO SCALE

FIXTURE:
MANUFACTURE: FINTRONX
SERIES: APOLLO
WATTAGE: 240W
COLOR TEMO: 5000K
LENS: A3M112
FIXTURE COLOR: BLACK
STANDARD VOLTAGE: 480V
NO SENSOR OPTIONS

ONE ARM BRACKET POLE, COLOR: BLACK

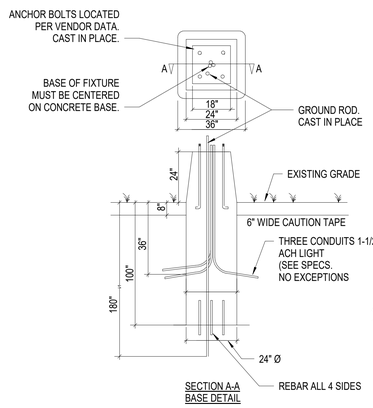

SECTION A-A
BASE DETAIL

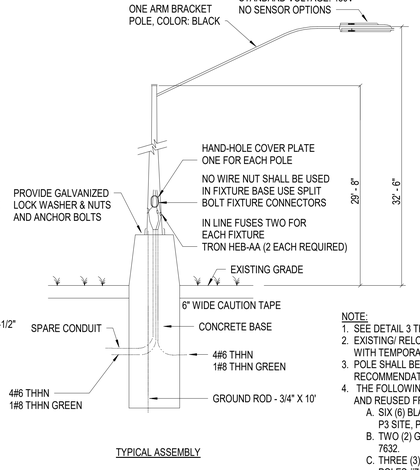

TYPICAL ASSEMBLY

NOTE:
1. SEE DETAIL 3 THIS SHEET FOR POLE BASE STRUCTURAL DETAIL
2. EXISTING/ RELOCATED POLES SHALL BE CLEARLY LABELED AND IDENTIFIED WITH TEMPORARY STICKER OR TAG AT EACH POLE.
3. POLE SHALL BE PROVIDED WITH VIBRATION DAMPER PER MANUFACTURER'S RECOMMENDATION
4. THE FOLLOWING ARE THE POLES, ARMS AND FIXTURES TO BE REFURBISHED AND REUSED FROM P3 SITE AND EXISTING PARKING LOT "L";
   A. SIX (6) BLACK POLES (DOUBLE HEADS CONVERT TO SINGLE HEAD) FROM P3 SITE, POLES # 7409, 7635, 7636, 7637, 7638 AND 7639.
   B. TWO (2) GREEN POLES (SINGLE HEADS) FROM P3 SITE, POLES #7631 AND 7632.
   C. THREE (3) POLES (SINGLE HEAD) FROM EXISTING PARKING LOT "L", POLES #7532, 7831 AND 7833.

2 PARKING LIGHT DETAILS (EXISTING RELOCATED POLE & LIGHT)
NO SCALE

UNCW
UNIVERSITY of NORTH CAROLINA WILMINGTON
601 S COLLEGE ROAD
WILMINGTON, NORTH CAROLINA 28403

PARKING DECK II AND SURFACE PARKING (DESIGN-BUILD)
SOUTH CAMPUS - 4965 RIEGEL ROAD

SCO ID NUMBER: 18-19226-01A
CODE: 41828
ITEM: 301

CONTRACTOR
Balfour Beatty Construction

DESIGNER

CLARKNEXSEN
1523 ELIZABETH AVENUE, SUITE 300
CHARLOTTE, NORTH CAROLINA 28204
704·377·8800
CLARK NEXSEN LICENSE NUMBER: C-1028

WALKER CONSULTANTS
13860 Ballantyne Corporate Place
Suite 140
Charlotte, NC 28277
T: 704.247.6230
www.walkerconsultants.com
NC License No. F-0518

McKIM&CREED
CIVIL ENGINEER
243 NORTH FRONT STREET
WILMINGTON, NORTH CAROLINA
28401
910.343.1048

PROFESSIONAL SEAL
NOT FOR CONSTRUCTION
CLARK NEXSEN CERT NO. 50680 NORTH CAROLINA
NORTH CAROLINA PROFESSIONAL SEAL 027766 ENGINEER
NC CORPORATE ENGINEERING LICENSE #C-1028

SUBMITTAL
04/15/2019
CONSTRUCTION DOCUMENT SUBMITTAL 01

REVISIONS

KEY PLAN

SHEET
ELECTRICAL SITE DETAILS

ES502

DESIGN: WAZ
DRAWN: KAW
REVIEW: WAZ

CN 8112

4/12/2019 2:11:50 PM
C:\Revit Projects\8112_UNCW Parking Deck II E17_Benton.Davis@clarknexsen.com.rvt

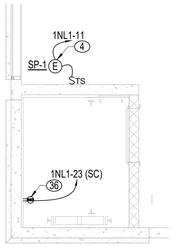

ENLARGED SOUTHWEST ELEVATOR POWER PLAN
2 1/4" = 1'-0"

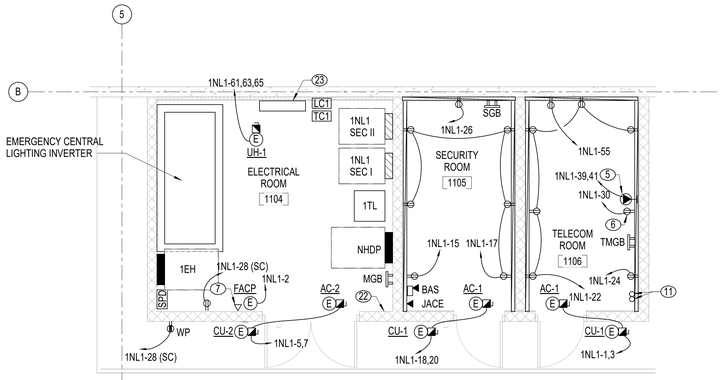

ELECTRICAL/TELECOM ROOMS
3 1/4" = 1'-0"

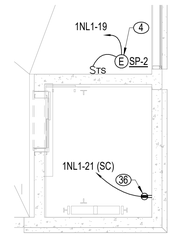

ENLARGED SOUTHEAST ELEVATOR POWER PLAN
4 1/4" = 1'-0"

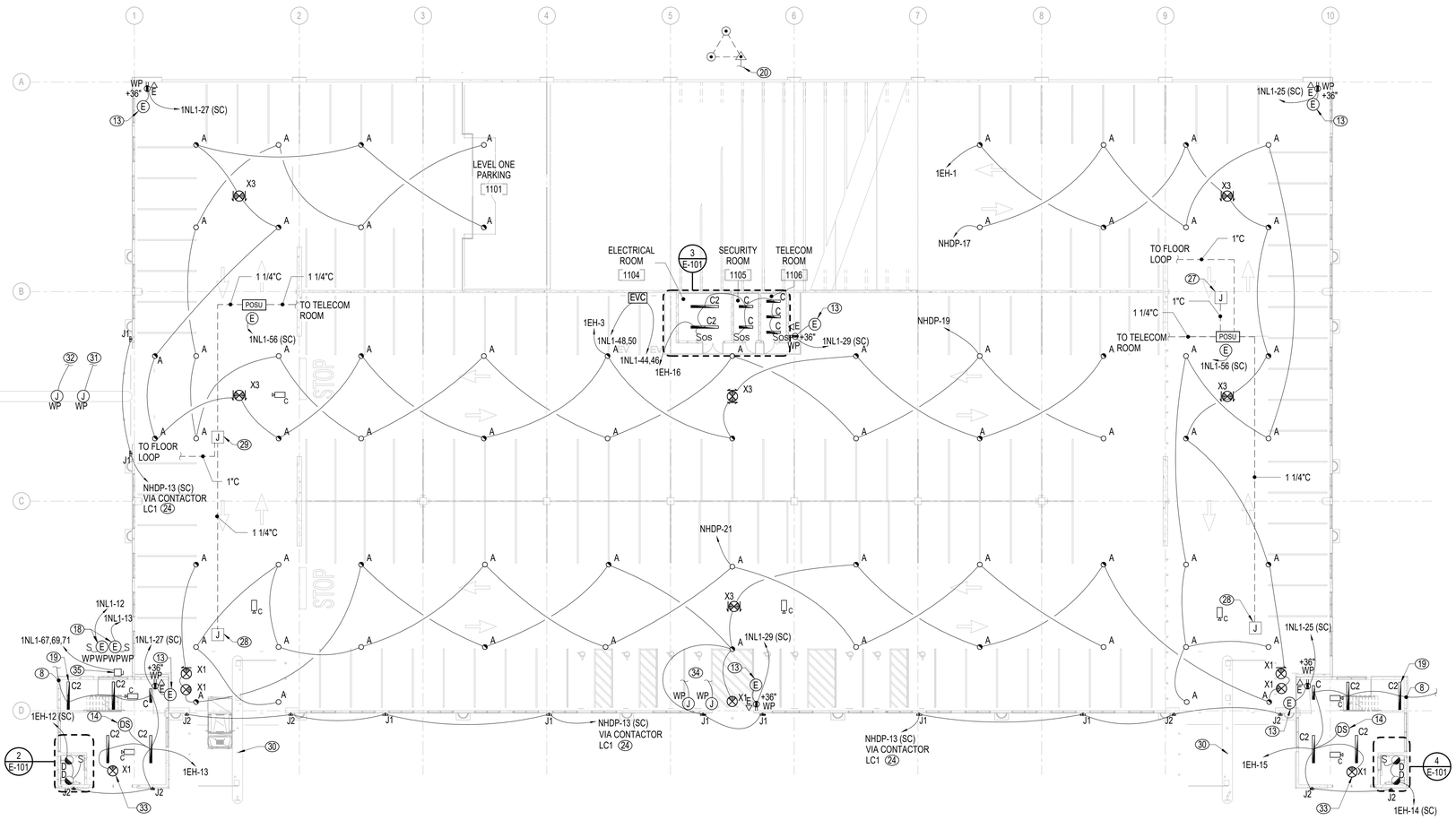

FIRST LEVEL - LIGHTING, POWER, AND SYSTEMS PLAN
1 1/16" = 1'-0"

GENERAL NOTES

1. PROVIDE EMERGENCY LIGHTING AND SIGNAGE AS REQUIRED BY LOCAL CODES TO ILLUMINATE AND IDENTIFY EGRESS PATHS UTILIZING THE CENTRAL LIGHTING INVERTER. WIRING FROM EMERGENCY SOURCE DISTRIBUTION OVERCURRENT PROTECTION TO EMERGENCY LOADS SHALL BE KEPT ENTIRELY INDEPENDENT OF ALL OTHER WIRING AND EQUIPMENT AND SHALL NOT ENTER THE SAME RACEWAY, CABLE BOX OR CABINET WITH OTHER WIRING.
2. CONDUITS ARE TO BE LOCATED IN THE GARAGE INTERIOR TO MINIMIZE VISUAL IMPACT. DO NOT ROUTE CONDUITS ON THE EXTERIOR OF ANY PART OF THE STRUCTURE. FIXTURES LOCATED ON THE EXTERIOR OF THE STRUCTURE ARE TO BE FED FROM BEHIND WITH NO CONDUIT VISABLE FROM THE OUTSIDE.
3. ALL RECEPTACLES SHALL BE GFI TYPE, UNLESS OTHERWISE NOTED. ALL RECEPTACLES EXCEPT THOSE IN ENCLOSED ROOMS SHALL HAVE WEATHERPROOF WHILE-IN-USE COVERS.

NOTES

1. ELEVATION MOTOR FUSED DISCONNECT. FUSE PER MANUFACTURER'S RECOMMENDATION. REFER TO RISER DIAGRAM E-600 FOR ADDITIONAL INFORMATION. DISCONNECT SHALL BE LOCKABLE IN THE OPEN POSITION.
2. ELEVATOR CAB LIGHT AND CONTROL FUSED DISCONNECT. PROVIDE 120V, 30A, 20A FUSE LOCKABLE IN THE OPEN POSITION.
3. PROVIDE (1) VOICE LINE FOR EACH ELEVATOR. FIELD COORDINATE SPECIFICS AND FINAL LOCATION WITH ELEVATOR SUPPLIER.
4. SUMP PUMP CONTROLLER. COORDINATE LOCATION WITH SUMP PUMP SUPPLIER.
5. PROVIDE NEMA L6-20R, 208V, TWIST-LOCK STYLE RECEPTACLE. LOCATE BELOW THE PROPOSED TELECOMMUNICATIONS CABINET. REFER TO DRAWING E-600 FOR CABINET REQUIREMENTS.
6. PROVIDE NEMA-5-20R, 120V, 20A, RECEPTCACLE. LOCATE BELOW THE PROPOSED WALL MOUNT TELECOMMUNICATIONS CABINET. REFER TO DRAWING E-600 FOR CABINET REQUIREMENTS.
7. VOICE LINE FOR FIRE ALARM DIGITAL COMMUNICATOR. COORDINATE SPECIFICS WITH FIRE ALARM SYSTEM SUPPLIER.
8. CONNECT TO STAIR LUMINAIRE ON TIER ABOVE.
9. CONNECT TO STAIR LUMINAIRE ON TIER ABOVE AND TIER BELOW.
10. CONNECT TO STAIR LUMINAIRE ON TIER BELOW.
11. (2) 4" INCOMING TELECOM CONDUITS FROM MANHOLE MH-14A5. REFER TO DRAWING ES101 FOR CONTINUATION.
12. REFER TO LUMINAIRE SCHEDULE FOR MOUNTING SPECIFICS OF LUMINAIRE LOCATED AT TOP OF ELEVATOR SHAFT.
13. PROVIDE CONNECTION TO EMERGENCY PHONE. EXTEND 2#12, 1#12,3/4"C FROM RECEPTACLE JUNCTION BOX TO BUTTON OF CALL BOX.
14. DAYLIGHT SENSOR FOR DAYLIGHT HARVESTING. PROVIDE ONE SENSOR PER STAIR TOWER AND CONNECT TO FOUR (3) TYPE C2 AND (1) TYPE C LUMINAIRES ON EACH TIER AND (2) TYPE C2 AND (2) TYPE C LUMINAIRS ON THE TOP TIER FIFTH LEVEL. LOCATE SENSOR ON GROUND TIER LEVEL PER MANUFACTURER RECOMMENDATIONS. DO NOT CONNECT LAMINAR TYPE C2 AT THE STAIR LOWER LANDING TO THE DAYLIGHT SENSOR.
15. COORDINATE ANCHOR BOLT PATTERN OF POLE WITH DECK MANUFACTURER PRIOR TO ORDERING POLE. COORDINATE DRILL PATTERN AND BOLT PATTERN OF LUMINAIRE MOUNT WITH POLE MANUFACTURER PRIOR TO ORDERING POLE.
16. BOND LIGHT POLE WITH #4 BARE COPPER WIRE TO BASE OF COLUMN'S VERTICAL REINFORCING BARS (IF NOT LESS THAN 1/2" IN DIAMETER), INSTALLED IN MULTIPLE PIECES AND CONNECTED TOGETHER BY THE USUAL STEEL TIE WIRES, WELDING, EXOTHERMIC WELDING, OR OTHER EFFECTIVE MEANS TO CREATE A CONTINUOUS PATH TO EARTH.
17. COORDINATE STEEL VERTICAL REINFORCING BAR CONNECTION TO ENSURE CONTINUOUS PATH TO EARTH WITH CONTRACTOR PRIOR TO CONCRETE IS POURED FOR EACH LIGHT POLE LOCATION.
18. PROVIDE CONNECTION TO HEATED BACKFLOW AND IRRIGATION ENCLOSURE. IRRIGATION CONTROLLER, AND ASSOCIATED HEAT TRACING. COORDINATE CONNECTION REQUIREMENT WITH EQUIPMENT INSTALLER. REFER TO SITE DRAWING CG100 AND PLUMBING DRAWINGS P101 AND P201 FOR LOCATION.
19. CONNECT LUMINAIRE A HEAD OF LOCAL CONTROL
20. GROUND TRIAD, LOCATE MINIMUM 5' FROM BUILDING. EXTEND 1-1/4"C FROM GROUND TEST WELL TO MAIN GROUND ROD LOCATED IN THE ELECTRICAL ROOM 1104 (MGB). INSTALL CONDUIT MINIMUM 30" BELOW FINISHED GRADE. REFER TO DETAILS 1 AND 2 DRAWING E-500 FOR ADDITIONAL REQUIREMENT
21. PHOTOCELL FOR BRANCH CIRCUITS VIA LIGHTING CONTACTOR LC1. MOUNT PHOTOCELL UNDER ROOF EAVE OF STAIR TOWER. ORIENT FACING NORTH.
22. MOUNT A COPY OF THE ELECTRICAL POWER RISER DIAGRAM, UNDER CLEAR PROTECTIVE MATERIAL AT THIS LOCATION.
23. PROVIDE NEMA1 SCREW-OVER WIREWAY, 8" WIDE X 8" HIGH X 36" LONG FOR SITE LIGHTING UNDERGROUND CONDUIT TERMINATIONS. MOUNT 24" AFF.
24. TYPE J1 AND J2 CONNECTED VIA LIGHTING CONTACTOR LC1 LUMINAIRES SHALL NOT BE PROVIDED WITH INTEGRAL PHOTOCELL. REFER TO LUMINAIRE SCHEDULE'S NOTES.
25. MOUNT LUMINAIRE AT 17' AFF TO CENTER. COORDINATE LOCATION WITH ARCHITECTURAL DRAWINGS. REFER TO LUMINAIRE SCHEDULE FOR ADDITIONAL INFORMATION.
26. JUNCTION BOXES FOR FUTURE ELECTRIC VEHICLE CHARGER. REFER TO SYMBOL LEGEND FOR ADDITIONAL INFORMATION. TYPICAL FOR SECOND AND THIRD LEVELS ONLY.
27. PROVIDE TWO-GANG JUNCTION BOX FOR CONNECTION TO VEHICLE COUNTING SENSORS. EXTEND LOW VOLTAGE CABLE 1" CONDUIT TO EACH SENSOR AND MAKE CONNECTIONS. COORDINATE LOCATION WITH STRUCTURAL DRAWINGS AG401 AND AG402 AND SYSTEM VENDOR.
28. PROVIDE TWO-GANG JUNCTION BOX FOR CONNECTION TO LIGHTED SIGNS HANGING FROM BOTTOM OF DOUBLE TEES OVER EACH LANE (GREEN ARROW / X) AND EXTERIOR LIGHTED SIGNS, (ENTER/ EXIT) OVER EACH LANE. COORDINATE SIGNAGE LOCATION WITH STRUCTURAL DRAWINGS, AG401 AND AG402 AND SYSTEM VENDOR. EXTEND LOW VOLTAGE CABLE IN 1" CONDUIT TO EACH SIGN.
29. PROVIDE TWO-GANG JUNCTION BOX FOR CONNECTION TO LIGHTED SIGNS HANGING FROM BOTTOM OF DOUBLE TEES OVER EACH LANE (GREEN ARROW / X). COORDINATE SIGNAGE LOCATION WITH STRUCTURAL DRAWINGS, AG401 AND AG402 AND SYSTEM VENDOR. EXTEND LOW VOLTAGE CABLE IN 1" CONDUIT TO EACH SIGN.
30. REFER TO DETAIL 9 DRAWING E-500 FOR POWER AND DATA REQUIREMENTS.
31. EXTEND (1) 1" CONDUIT UNDERGROUND FROM WEATHERPROOF JUNCTION BOX TO ELECTRICAL ROOM PANEL 1NL1 SECTION II FOR FUTURE GATE AND TERMINATE AT BOTH ENDS. MOUNT JUNCTION BOX 12" AFF PROVIDE WEATHERPROOF COVER PLATE AND LABEL.
32. EXTEND (1) 1-1/2" CONDUIT UNDERGROUND FROM WEATHERPROOF JUNCTION BOX TO TELECOM ROOM EAST WALL FOR FUTURE GATE. MOUNT JUNCTION BOX 10" AFG, PROVIDE WEATHERPROOF COVER PLATE AND LABEL. STUB-UP CONDUIT IN TELECOM ROOM 10" AFF.
33. REFER TO ARCHITECTURAL CURTAIN WALL DETAIL DRAWING FOR EXIT SIGN MOUNTING LOCATION.
34. EXTEND (1) 1" CONDUIT FOR POWER AND (1) 1" CONDUIT FOR DATA, SAME AS NOTES 31 AND 32 EXCEPT FOR FUTURE PAY BY SPACE MACHINE. COORDINATE FINAL LOCATION WITH UNCW PRIOR TO INSTALLATION.
35. PROVIDE HEAVY DUTY NEMA 4X, 240 V, 30 AMP NON-FUSED DISCONNECT FOR BOOSTER PUMP. EXTEND 3#8, 1#8 G, 1" CONDUIT UNDERGROUND FROM DISCONNECT TO PANEL 1NL1 SECTION II TO CIRCUIT INDICATED, AND EXTEND 3#12, 1#12 G, 3/4" CONDUIT FROM DISCONNECT TO PUMP AND MAKE CONNECTIONS. PUMP HEATED ENCLOSURE SHALL BE CONNECTED TO THE BACKFLOW HEATED ENCLOSURE CIRCUIT 1NL1-12 AT THIS LOCATION. REFER TO KEY NOTE 18 FOR ADDITIONAL INFORMATION.
36. MOUNT RECEPTACLE 12" AFF IN REAR WALL.
37. PROVIDE SUPPORT STRUCTURE FOR THE STROBE / LOCATOR LIGHT TO BE MOUNTED 96" AFF.

GRAPHIC SCALE(S)

1/4" = 1' - 0" 0 1' 5' 10' 15'

1/16" = 1' - 0" 0 5' 10' 20' 30' 60'

UNCW
UNIVERSITY of NORTH CAROLINA WILMINGTON
601 S COLLEGE ROAD
WILMINGTON, NORTH CAROLINA 28403

PARKING DECK II AND SURFACE PARKING (DESIGN-BUILD)
SOUTH CAMPUS - 4965 RIEGEL ROAD

SCO ID NUMBER: 18-19226-01A
CODE: 41828
ITEM: 301

CONTRACTOR
Balfour Beatty Construction

DESIGNER

CLARKNEXSEN
1523 ELIZABETH AVENUE, SUITE 300
CHARLOTTE, NORTH CAROLINA 28204
704·377·8800
CLARK NEXSEN LICENSE NUMBER: C-1028

WALKER CONSULTANTS
13860 Ballantyne Corporate Place
Suite 140
Charlotte, NC 28277
T: 704.247.6230
www.walkerconsultants.com
NC License No. F-0518

McKIM&CREED
CIVIL ENGINEER
243 NORTH FRONT STREET
WILMINGTON, NORTH CAROLINA
28401
910.343.1048

PROFESSIONAL SEAL
NOT FOR CONSTRUCTION
CLARK NEXSEN CERT NO. 50680 NORTH CAROLINA
NORTH CAROLINA PROFESSIONAL ENGINEER SEAL 027766 JOHN E. ZOMBI
NC CORPORATE ENGINEERING LICENSE #C-1028

SUBMITTAL
04/15/2019
CONSTRUCTION DOCUMENT SUBMITTAL 01

REVISIONS

KEY PLAN

SHEET
FIRST LEVEL - LIGHTING, POWER AND SYSTEMS PLAN

E-101

DESIGN: JE
DRAWN: KAW
REVIEW: WAZ

CN 8112

4/12/2019 2:11:34 PM
C:\Revit Projects\8112_UNCW Parking Deck II E17_Benton.Davis@clarknexsen.com.rvt

GENERAL NOTES

1. PROVIDE EMERGENCY LIGHTING AND SIGNAGE AS REQUIRED BY LOCAL CODES TO ILLUMINATE AND IDENTIFY EGRESS PATHS UTILIZING THE CENTRAL LIGHTING INVERTER. WIRING FROM EMERGENCY SOURCE DISTRIBUTION OVERCURRENT PROTECTION TO EMERGENCY LOADS SHALL BE KEPT ENTIRELY INDEPENDENT OF ALL OTHER WIRING AND EQUIPMENT AND SHALL NOT ENTER THE SAME RACEWAY, CABLE BOX OR CABINET WITH OTHER WIRING.
2. CONDUITS ARE TO BE LOCATED IN THE GARAGE INTERIOR TO MINIMIZE VISUAL IMPACT. DO NOT ROUTE CONDUITS ON THE EXTERIOR OF ANY PART OF THE STRUCTURE. FIXTURES LOCATED ON THE EXTERIOR OF THE STRUCTURE ARE TO BE FED FROM BEHIND WITH NO CONDUIT VISABLE FROM THE OUTSIDE.
3. ALL RECEPTACLES SHALL BE GFI TYPE, UNLESS OTHERWISE NOTED. ALL RECEPTACLES EXCEPT THOSE IN ENCLOSED ROOMS SHALL HAVE WEATHERPROOF WHILE-IN-USE COVERS.

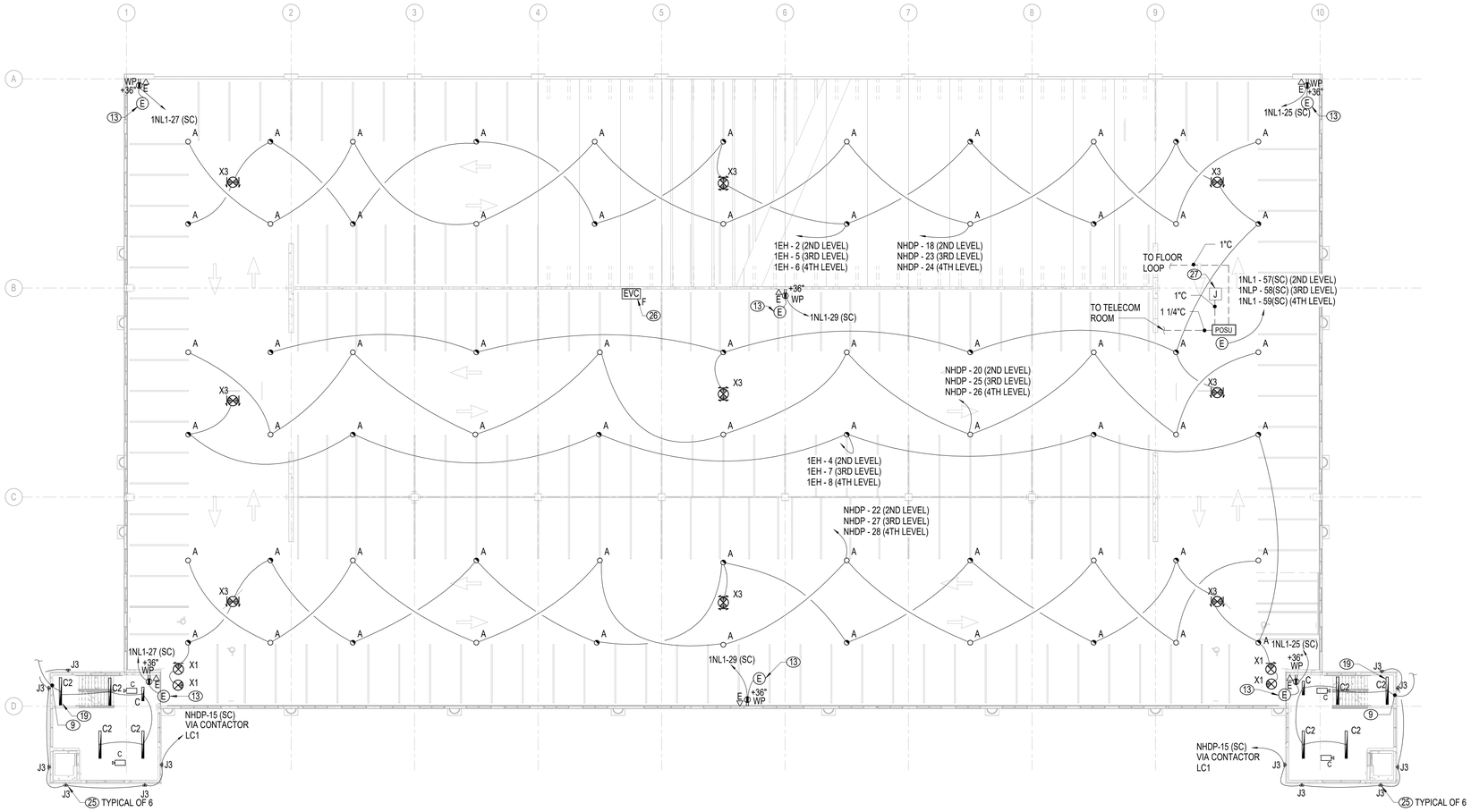

1 TYPICAL LEVELS SECOND-FOURTH - LIGHTING, POWER, AND SYSTEMS PLAN
1/16" = 1'-0"

NOTES

1. ELEVATION MOTOR FUSED DISCONNECT. FUSE PER MANUFACTURER'S RECOMMENDATION. REFER TO RISER DIAGRAM E-600 FOR ADDITIONAL INFORMATION. DISCONNECT SHALL BE LOCKABLE IN THE OPEN POSITION.
2. ELEVATOR CAB LIGHT AND CONTROL FUSED DISCONNECT. PROVIDE 120V, 30A, 20A FUSE LOCKABLE IN THE OPEN POSITION.
3. PROVIDE (1) VOICE LINE FOR EACH ELEVATOR. FIELD COORDINATE SPECIFICS AND FINAL LOCATION WITH ELEVATOR SUPPLIER.
4. SUMP PUMP CONTROLLER. COORDINATE LOCATION WITH SUMP PUMP SUPPLIER.
5. PROVIDE NEMA L6-20R, 208V, TWIST-LOCK STYLE RECEPTACLE. LOCATE BELOW THE PROPOSED TELECOMMUNICATIONS CABINET. REFER TO DRAWING E-600 FOR CABINET REQUIREMENTS.
6. PROVIDE NEMA-5-20R, 120V, 20A, RECEPTCACLE. LOCATE BELOW THE PROPOSED WALL MOUNT TELECOMMUNICATIONS CABINET. REFER TO DRAWING E-600 FOR CABINET REQUIREMENTS.
7. VOICE LINE FOR FIRE ALARM DIGITAL COMMUNICATOR. COORDINATE SPECIFICS WITH FIRE ALARM SYSTEM SUPPLIER.
8. CONNECT TO STAIR LUMINAIRE ON TIER ABOVE.
9. CONNECT TO STAIR LUMINAIRE ON TIER ABOVE AND TIER BELOW.
10. CONNECT TO STAIR LUMINAIRE ON TIER BELOW.
11. (2) 4" INCOMING TELECOM CONDUITS FROM MANHOLE MH-14A5. REFER TO DRAWING ES101 FOR CONTINUATION.
12. REFER TO LUMINAIRE SCHEDULE FOR MOUNTING SPECIFICS OF LUMINAIRE LOCATED AT TOP OF ELEVATOR SHAFT.
13. PROVIDE CONNECTION TO EMERGENCY PHONE. EXTEND 2#12, 1#12,3/4"C FROM RECEPTACLE JUNCTION BOX TO BUTTON OF CALL BOX.
14. DAYLIGHT SENSOR FOR DAYLIGHT HARVESTING. PROVIDE ONE SENSOR PER STAIR TOWER AND CONNECT TO FOUR (3) TYPE C2 AND (1) TYPE C LUMINAIRES ON EACH TIER AND (2) TYPE C2 AND (2) TYPE C LUMINAIRS ON THE TOP TIER FIFTH LEVEL. LOCATE SENSOR ON GROUND TIER LEVEL PER MANUFACTURER RECOMMENDATIONS. DO NOT CONNECT LAMINAR TYPE C2 AT THE STAIR LOWER LANDING TO THE DAYLIGHT SENSOR.
15. COORDINATE ANCHOR BOLT PATTERN OF POLE WITH DECK MANUFACTURER PRIOR TO ORDERING POLE. COORDINATE DRILL PATTERN AND BOLT PATTERN OF LUMINAIRE MOUNT WITH POLE MANUFACTURER PRIOR TO ORDERING POLE.
16. BOND LIGHT POLE WITH #4 BARE COPPER WIRE TO BASE OF COLUMN'S VERTICAL REINFORCING BARS (IF NOT LESS THAN 1/2" IN DIAMETER), INSTALLED IN MULTIPLE PIECES AND CONNECTED TOGETHER BY THE USUAL STEEL TIE WIRES, WELDING, EXOTHERMIC WELDING, OR OTHER EFFECTIVE MEANS TO CREATE A CONTINUOUS PATH TO EARTH.
17. COORDINATE STEEL VERTICAL REINFORCING BAR CONNECTION TO ENSURE CONTINUOUS PATH TO EARTH WITH CONTRACTOR PRIOR TO CONCRETE IS POURED FOR EACH LIGHT POLE LOCATION.
18. PROVIDE CONNECTION TO HEATED BACKFLOW AND IRRIGATION ENCLOSURE. IRRIGATION CONTROLLER, AND ASSOCIATED HEAT TRACING. COORDINATE CONNECTION REQUIREMENT WITH EQUIPMENT INSTALLER. REFER TO SITE DRAWING CG100 AND PLUMBING DRAWINGS P101 AND P201 FOR LOCATION.
19. CONNECT LUMINAIRE A HEAD OF LOCAL CONTROL
20. GROUND TRIAD, LOCATE MINIMUM 5' FROM BUILDING. EXTEND 1-1/4"C FROM GROUND TEST WELL TO MAIN GROUND ROD LOCATED IN THE ELECTRICAL ROOM 1104 (MGB). INSTALL CONDUIT MINIMUM 30" BELOW FINISHED GRADE. REFER TO DETAILS 1 AND 2 DRAWING E-500 FOR ADDITIONAL REQUIREMENT
21. PHOTOCELL FOR BRANCH CIRCUITS VIA LIGHTING CONTACTOR LC1. MOUNT PHOTOCELL UNDER ROOF EAVE OF STAIR TOWER. ORIENT FACING NORTH.
22. MOUNT A COPY OF THE ELECTRICAL POWER RISER DIAGRAM, UNDER CLEAR PROTECTIVE MATERIAL AT THIS LOCATION.
23. PROVIDE NEMA1 SCREW-OVER WIREWAY, 8" WIDE X 8" HIGH X 36" LONG FOR SITE LIGHTING UNDERGROUND CONDUIT TERMINATIONS. MOUNT 24" AFF.
24. TYPE J1 AND J2 CONNECTED V/A LIGHTING CONTACTOR LC1 LUMINAIRES SHALL NOT BE PROVIDED WITH INTEGRAL PHOTOCELL. REFER TO LUMINAIRE SCHEDULE'S NOTES.
25. MOUNT LUMINAIRE AT 17' AFF TO CENTER. COORDINATE LOCATION WITH ARCHITECTURAL DRAWINGS. REFER TO LUMINAIRE SCHEDULE FOR ADDITIONAL INFORMATION.
26. JUNCTION BOXES FOR FUTURE ELECTRIC VEHICLE CHARGER. REFER TO SYMBOL LEGEND FOR ADDITIONAL INFORMATION. TYPICAL FOR SECOND AND THIRD LEVELS ONLY.
27. PROVIDE TWO-GANG JUNCTION BOX FOR CONNECTION TO VEHICLE COUNTING SENSORS. EXTEND LOW VOLTAGE CABLE 1" CONDUIT TO EACH SENSOR AND MAKE CONNECTIONS. COORDINATE LOCATION WITH STRUCTURAL DRAWINGS AG401 AND AG402 AND SYSTEM VENDOR.
28. PROVIDE TWO-GANG JUNCTION BOX FOR CONNECTION TO LIGHTED SIGNS HANGING FROM BOTTOM OF DOUBLE TEES OVER EACH LANE (GREEN ARROW / X) AND EXTERIOR LIGHTED SIGNS, (ENTER/ EXIT) OVER EACH LANE. COORDINATE SIGNAGE LOCATION WITH STRUCTURAL DRAWINGS, AG401 AND AG402 AND SYSTEM VENDOR. EXTEND LOW VOLTAGE CABLE IN 1" CONDUIT TO EACH SIGN.
29. PROVIDE TWO-GANG JUNCTION BOX FOR CONNECTION TO LIGHTED SIGNS HANGING FROM BOTTOM OF DOUBLE TEES OVER EACH LANE (GREEN ARROW / X). COORDINATE SIGNAGE LOCATION WITH STRUCTURAL DRAWINGS, AG401 AND AG402 AND SYSTEM VENDOR. EXTEND LOW VOLTAGE CABLE IN 1" CONDUIT TO EACH SIGN.
30. REFER TO DETAIL 9 DRAWING E-500 FOR POWER AND DATA REQUIREMENTS.
31. EXTEND (1) 1" CONDUIT UNDERGROUND FROM WEATHERPROOF JUNCTION BOX TO ELECTRICAL ROOM PANEL 1NL1 SECTION II FOR FUTURE GATE AND TERMINATE AT BOTH ENDS. MOUNT JUNCTION BOX 12" AFF PROVIDE WEATHERPROOF COVER PLATE AND LABEL.
32. EXTEND (1) 1-1/2" CONDUIT UNDERGROUND FROM WEATHERPROOF JUNCTION BOX TO TELECOM ROOM EAST WALL FOR FUTURE GATE. MOUNT JUNCTION BOX 10" AFG, PROVIDE WEATHERPROOF COVER PLATE AND LABEL. STUB-UP CONDUIT IN TELECOM ROOM 10" AFF.
33. REFER TO ARCHITECTURAL CURTAIN WALL DETAIL DRAWING FOR EXIT SIGN MOUNTING LOCATION.
34. EXTEND (1) 1" CONDUIT FOR POWER AND (1) 1" CONDUIT FOR DATA, SAME AS NOTES 31 AND 32 EXCEPT FOR FUTURE PAY BY SPACE MACHINE. COORDINATE FINAL LOCATION WITH UNCW PRIOR TO INSTALLATION.
35. PROVIDE HEAVY DUTY NEMA 4X, 240 V, 30 AMP NON-FUSED DISCONNECT FOR BOOSTER PUMP. EXTEND 3#8, 1#8 G, 1" CONDUIT UNDERGROUND FROM DISCONNECT TO PANEL 1NL1 SECTION II TO CIRCUIT INDICATED, AND EXTEND 3#12, 1#12 G, 3/4" CONDUIT FROM DISCONNECT TO PUMP AND MAKE CONNECTIONS. PUMP HEATED ENCLOSURE SHALL BE CONNECTED TO THE BACKFLOW HEATED ENCLOSURE CIRCUIT 1NL1-12 AT THIS LOCATION. REFER TO KEY NOTE 18 FOR ADDITIONAL INFORMATION.
36. MOUNT RECEPTACLE 12" AFF IN REAR WALL.
37. PROVIDE SUPPORT STRUCTURE FOR THE STROBE / LOCATOR LIGHT TO BE MOUNTED 96" AFF.

GRAPHIC SCALE(S)

1/16" = 1' - 0" 0 5' 10' 20' 30' 60'

UNCW
UNIVERSITY of NORTH CAROLINA WILMINGTON
601 S COLLEGE ROAD
WILMINGTON, NORTH CAROLINA 28403

PARKING DECK II AND SURFACE PARKING (DESIGN-BUILD)
SOUTH CAMPUS - 4965 RIEGEL ROAD

SCO ID NUMBER: 18-19226-01A
CODE: 41828
ITEM: 301

CONTRACTOR
Balfour Beatty Construction

DESIGNER

CLARKNEXSEN
1523 ELIZABETH AVENUE, SUITE 300
CHARLOTTE, NORTH CAROLINA 28204
704·377·8800

CLARK NEXSEN LICENSE NUMBER: C-1028

WALKER CONSULTANTS
13860 Ballantyne Corporate Place
Suite 140
Charlotte, NC 28277
T: 704.247.6230
www.walkerconsultants.com
NC License No. F-0518

McKIM&CREED
CIVIL ENGINEER
243 NORTH FRONT STREET
WILMINGTON, NORTH CAROLINA
28401
910.343.1048

PROFESSIONAL SEAL
NOT FOR CONSTRUCTION
CLARK NEXSEN CERT NO. 50680 NORTH CAROLINA
NORTH CAROLINA PROFESSIONAL SEAL 027766 ENGINEER
NC CORPORATE ENGINEERING LICENSE #C-1028

SUBMITTAL
04/15/2019
CONSTRUCTION DOCUMENT SUBMITTAL 01

REVISIONS

KEY PLAN

SHEET
TYPICAL LEVELS SECOND-FOURTH - LIGHTING, POWER AND SYSTEMS PLAN

E-102

DESIGN: JE
DRAWN: KAW
REVIEW: WAZ

CN 8112

4/12/2019 2:11:38 PM
C:\Revit Projects\8112_UNCW Parking Deck II E17_Benton.Davis@clarknexsen.com.rvt

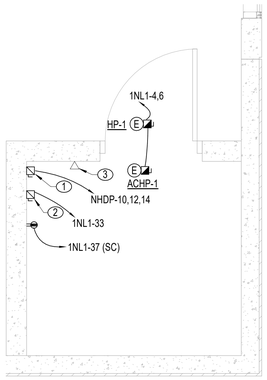

2 ENLARGED SOUTHWEST ELEVATOR CLOSET POWER PLAN
1/2" = 1'-0"

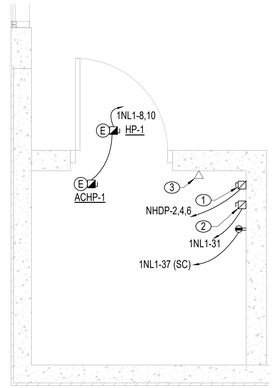

3 ENLARGED SOUTHEAST ELEVATOR CLOSET POWER PLAN
1/2" = 1'-0"

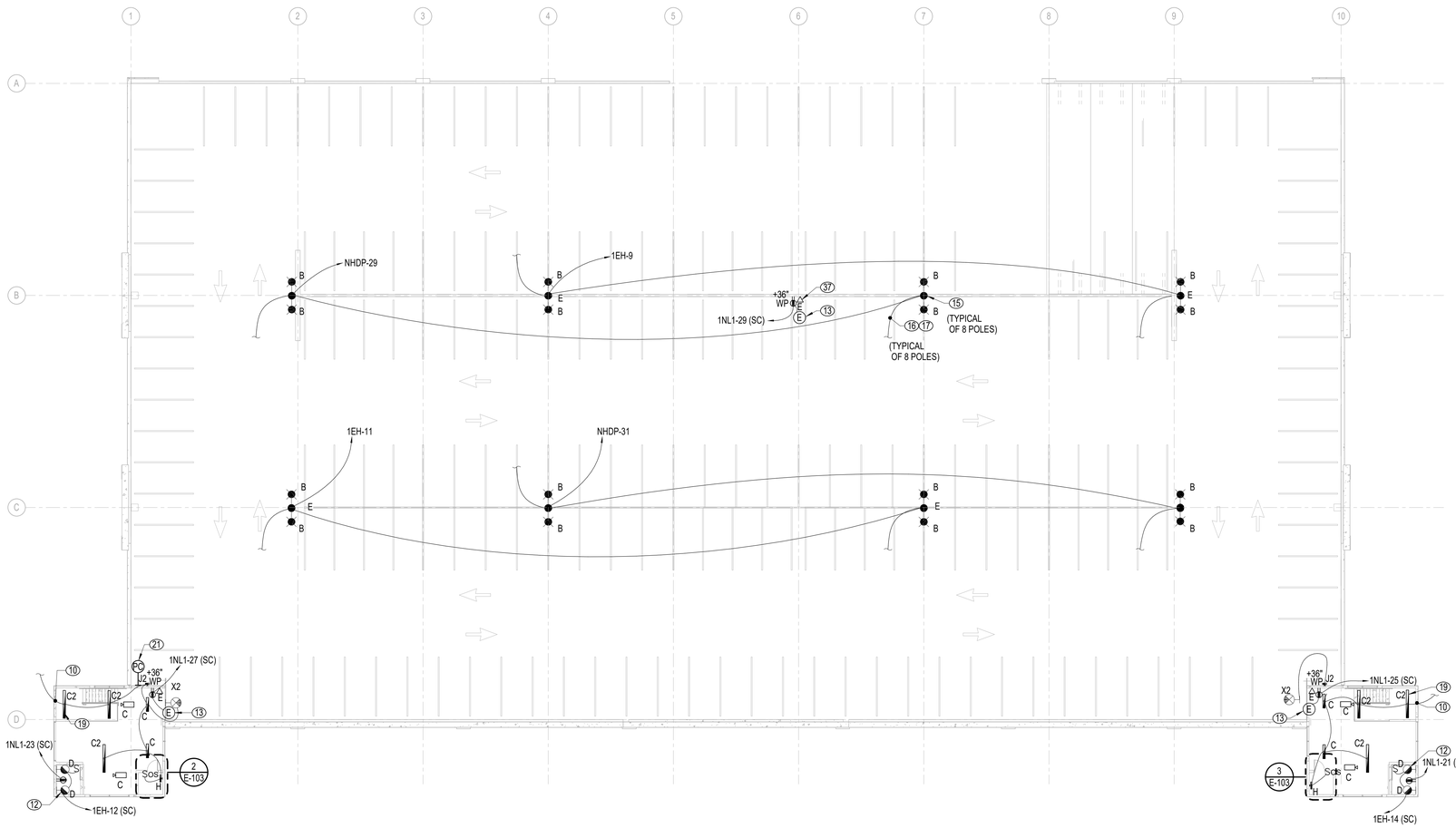

1 FIFTH LEVEL - LIGHTING, POWER, AND SYSTEMS PLAN
1/16" = 1'-0"

GENERAL NOTES

1. PROVIDE EMERGENCY LIGHTING AND SIGNAGE AS REQUIRED BY LOCAL CODES TO ILLUMINATE AND IDENTIFY EGRESS PATHS UTILIZING THE CENTRAL LIGHTING INVERTER. WIRING FROM EMERGENCY SOURCE DISTRIBUTION OVERCURRENT PROTECTION TO EMERGENCY LOADS SHALL BE KEPT ENTIRELY INDEPENDENT OF ALL OTHER WIRING AND EQUIPMENT AND SHALL NOT ENTER THE SAME RACEWAY, CABLE BOX OR CABINET WITH OTHER WIRING.
2. CONDUITS ARE TO BE LOCATED IN THE GARAGE INTERIOR TO MINIMIZE VISUAL IMPACT. DO NOT ROUTE CONDUITS ON THE EXTERIOR OF ANY PART OF THE STRUCTURE. FIXTURES LOCATED ON THE EXTERIOR OF THE STRUCTURE ARE TO BE FED FROM BEHIND WITH NO CONDUIT VISABLE FROM THE OUTSIDE.
3. ALL RECEPTACLES SHALL BE GFI TYPE, UNLESS OTHERWISE NOTED. ALL RECEPTACLES EXCEPT THOSE IN ENCLOSED ROOMS SHALL HAVE WEATHERPROOF WHILE-IN-USE COVERS.

NOTES

1. ELEVATION MOTOR FUSED DISCONNECT. FUSE PER MANUFACTURER'S RECOMMENDATION. REFER TO RISER DIAGRAM E-600 FOR ADDITIONAL INFORMATION. DISCONNECT SHALL BE LOCKABLE IN THE OPEN POSITION.
2. ELEVATOR CAB LIGHT AND CONTROL FUSED DISCONNECT. PROVIDE 120V, 30A, 20A FUSE LOCKABLE IN THE OPEN POSITION.
3. PROVIDE (1) VOICE LINE FOR EACH ELEVATOR. FIELD COORDINATE SPECIFICS AND FINAL LOCATION WITH ELEVATOR SUPPLIER.
4. SUMP PUMP CONTROLLER. COORDINATE LOCATION WITH SUMP PUMP SUPPLIER.
5. PROVIDE NEMA L6-20R, 208V, TWIST-LOCK STYLE RECEPTACLE. LOCATE BELOW THE PROPOSED TELECOMMUNICATIONS CABINET. REFER TO DRAWING E-600 FOR CABINET REQUIREMENTS.
6. PROVIDE NEMA-5-20R, 120V, 20A, RECEPTCACLE. LOCATE BELOW THE PROPOSED WALL MOUNT TELECOMMUNICATIONS CABINET. REFER TO DRAWING E-600 FOR CABINET REQUIREMENTS.
7. VOICE LINE FOR FIRE ALARM DIGITAL COMMUNICATOR. COORDINATE SPECIFICS WITH FIRE ALARM SYSTEM SUPPLIER.
8. CONNECT TO STAIR LUMINAIRE ON TIER ABOVE.
9. CONNECT TO STAIR LUMINAIRE ON TIER ABOVE AND TIER BELOW.
10. CONNECT TO STAIR LUMINAIRE ON TIER BELOW.
11. (2) 4" INCOMING TELECOM CONDUITS FROM MANHOLE MH-14A5. REFER TO DRAWING ES101 FOR CONTINUATION.
12. REFER TO LUMINAIRE SCHEDULE FOR MOUNTING SPECIFICS OF LUMINAIRE LOCATED AT TOP OF ELEVATOR SHAFT.
13. PROVIDE CONNECTION TO EMERGENCY PHONE. EXTEND 2#12, 1#12,3/4"C FROM RECEPTACLE JUNCTION BOX TO BUTTON OF CALL BOX.
14. DAYLIGHT SENSOR FOR DAYLIGHT HARVESTING. PROVIDE ONE SENSOR PER STAIR TOWER AND CONNECT TO FOUR (3) TYPE C2 AND (1) TYPE C LUMINAIRES ON EACH TIER AND (2) TYPE C2 AND (2) TYPE C LUMINAIRS ON THE TOP TIER FIFTH LEVEL. LOCATE SENSOR ON GROUND TIER LEVEL PER MANUFACTURER RECOMMENDATIONS. DO NOT CONNECT LAMINAR TYPE C2 AT THE STAIR LOWER LANDING TO THE DAYLIGHT SENSOR.
15. COORDINATE ANCHOR BOLT PATTERN OF POLE WITH DECK MANUFACTURER PRIOR TO ORDERING POLE. COORDINATE DRILL PATTERN AND BOLT PATTERN OF LUMINAIRE MOUNT WITH POLE MANUFACTURER PRIOR TO ORDERING POLE.
16. BOND LIGHT POLE WITH #4 BARE COPPER WIRE TO BASE OF COLUMN'S VERTICAL REINFORCING BARS (IF NOT LESS THAN 1/2" IN DIAMETER), INSTALLED IN MULTIPLE PIECES AND CONNECTED TOGETHER BY THE USUAL STEEL TIE WIRES, WELDING, EXOTHERMIC WELDING, OR OTHER EFFECTIVE MEANS TO CREATE A CONTINUOUS PATH TO EARTH.
17. COORDINATE STEEL VERTICAL REINFORCING BAR CONNECTION TO ENSURE CONTINUOUS PATH TO EARTH WITH CONTRACTOR PRIOR TO CONCRETE IS POURED FOR EACH LIGHT POLE LOCATION.
18. PROVIDE CONNECTION TO HEATED BACKFLOW AND IRRIGATION ENCLOSURE. IRRIGATION CONTROLLER, AND ASSOCIATED HEAT TRACING. COORDINATE CONNECTION REQUIREMENT WITH EQUIPMENT INSTALLER. REFER TO SITE DRAWING CG100 AND PLUMBING DRAWINGS P101 AND P201 FOR LOCATION.
19. CONNECT LUMINAIRE A HEAD OF LOCAL CONTROL
20. GROUND TRIAD, LOCATE MINIMUM 5' FROM BUILDING. EXTEND 1-1/4"C FROM GROUND TEST WELL TO MAIN GROUND ROD LOCATED IN THE ELECTRICAL ROOM 1104 (MGB). INSTALL CONDUIT MINIMUM 30" BELOW FINISHED GRADE. REFER TO DETAILS 1 AND 2 DRAWING E-500 FOR ADDITIONAL REQUIREMENT
21. PHOTOCELL FOR BRANCH CIRCUITS VIA LIGHTING CONTACTOR LC1. MOUNT PHOTOCELL UNDER ROOF EAVE OF STAIR TOWER. ORIENT FACING NORTH.
22. MOUNT A COPY OF THE ELECTRICAL POWER RISER DIAGRAM, UNDER CLEAR PROTECTIVE MATERIAL AT THIS LOCATION.
23. PROVIDE NEMA1 SCREW-OVER WIREWAY, 8" WIDE X 8" HIGH X 36" LONG FOR SITE LIGHTING UNDERGROUND CONDUIT TERMINATIONS. MOUNT 24" AFF.
24. TYPE J1 AND J2 CONNECTED VIA LIGHTING CONTACTOR LC1 LUMINAIRES SHALL NOT BE PROVIDED WITH INTEGRAL PHOTOCELL. REFER TO LUMINAIRE SCHEDULE'S NOTES.
25. MOUNT LUMINAIRE AT 17' AFF TO CENTER. COORDINATE LOCATION WITH ARCHITECTURAL DRAWINGS. REFER TO LUMINAIRE SCHEDULE FOR ADDITIONAL INFORMATION.
26. JUNCTION BOXES FOR FUTURE ELECTRIC VEHICLE CHARGER. REFER TO SYMBOL LEGEND FOR ADDITIONAL INFORMATION. TYPICAL FOR SECOND AND THIRD LEVELS ONLY.
27. PROVIDE TWO-GANG JUNCTION BOX FOR CONNECTION TO VEHICLE COUNTING SENSORS. EXTEND LOW VOLTAGE CABLE 1" CONDUIT TO EACH SENSOR AND MAKE CONNECTIONS. COORDINATE LOCATION WITH STRUCTURAL DRAWINGS AG401 AND AG402 AND SYSTEM VENDOR.
28. PROVIDE TWO-GANG JUNCTION BOX FOR CONNECTION TO LIGHTED SIGNS HANGING FROM BOTTOM OF DOUBLE TEES OVER EACH LANE (GREEN ARROW / X) AND EXTERIOR LIGHTED SIGNS, (ENTER/ EXIT) OVER EACH LANE. COORDINATE SIGNAGE LOCATION WITH STRUCTURAL DRAWINGS, AG401 AND AG402 AND SYSTEM VENDOR. EXTEND LOW VOLTAGE CABLE IN 1" CONDUIT TO EACH SIGN.
29. PROVIDE TWO-GANG JUNCTION BOX FOR CONNECTION TO LIGHTED SIGNS HANGING FROM BOTTOM OF DOUBLE TEES OVER EACH LANE (GREEN ARROW / X). COORDINATE SIGNAGE LOCATION WITH STRUCTURAL DRAWINGS, AG401 AND AG402 AND SYSTEM VENDOR. EXTEND LOW VOLTAGE CABLE IN 1" CONDUIT TO EACH SIGN.
30. REFER TO DETAIL 9 DRAWING E-500 FOR POWER AND DATA REQUIREMENTS.
31. EXTEND (1) 1" CONDUIT UNDERGROUND FROM WEATHERPROOF JUNCTION BOX TO ELECTRICAL ROOM PANEL 1NL1 SECTION II FOR FUTURE GATE AND TERMINATE AT BOTH ENDS. MOUNT JUNCTION BOX 12" AFF PROVIDE WEATHERPROOF COVER PLATE AND LABEL.
32. EXTEND (1) 1-1/2" CONDUIT UNDERGROUND FROM WEATHERPROOF JUNCTION BOX TO TELECOM ROOM EAST WALL FOR FUTURE GATE. MOUNT JUNCTION BOX 10" AFG, PROVIDE WEATHERPROOF COVER PLATE AND LABEL. STUB-UP CONDUIT IN TELECOM ROOM 10" AFF.
33. REFER TO ARCHITECTURAL CURTAIN WALL DETAIL DRAWING FOR EXIT SIGN MOUNTING LOCATION.
34. EXTEND (1) 1" CONDUIT FOR POWER AND (1) 1" CONDUIT FOR DATA, SAME AS NOTES 31 AND 32 EXCEPT FOR FUTURE PAY BY SPACE MACHINE. COORDINATE FINAL LOCATION WITH UNCW PRIOR TO INSTALLATION.
35. PROVIDE HEAVY DUTY NEMA 4X, 240 V, 30 AMP NON-FUSED DISCONNECT FOR BOOSTER PUMP. EXTEND 3#8, 1#8 G, 1" CONDUIT UNDERGROUND FROM DISCONNECT TO PANEL 1NL1 SECTION II TO CIRCUIT INDICATED, AND EXTEND 3#12, 1#12 G, 3/4" CONDUIT FROM DISCONNECT TO PUMP AND MAKE CONNECTIONS. PUMP HEATED ENCLOSURE SHALL BE CONNECTED TO THE BACKFLOW HEATED ENCLOSURE CIRCUIT 1NL1-12 AT THIS LOCATION. REFER TO KEY NOTE 18 FOR ADDITIONAL INFORMATION.
36. MOUNT RECEPTACLE 12" AFF IN REAR WALL.
37. PROVIDE SUPPORT STRUCTURE FOR THE STROBE / LOCATOR LIGHT TO BE MOUNTED 96" AFF.

GRAPHIC SCALE(S)

1/2" = 1' - 0" 0 6" 1' 2' 3' 4' 5'

1/16" = 1' - 0" 0 5' 10' 20' 30' 60'

UNCW
UNIVERSITY of NORTH CAROLINA WILMINGTON
601 S COLLEGE ROAD
WILMINGTON, NORTH CAROLINA 28403

PARKING DECK II AND SURFACE PARKING (DESIGN-BUILD)
SOUTH CAMPUS - 4965 RIEGEL ROAD

SCO ID NUMBER: 18-19226-01A
CODE: 41828
ITEM: 301

CONTRACTOR
Balfour Beatty Construction

DESIGNER
CLARKNEXSEN
1523 ELIZABETH AVENUE, SUITE 300
CHARLOTTE, NORTH CAROLINA 28204
704·377·8800
CLARK NEXSEN LICENSE NUMBER: C-1028

WALKER CONSULTANTS
13860 Ballantyne Corporate Place
Suite 140
Charlotte, NC 28277
T: 704.247.6230
www.walkerconsultants.com
NC License No. F-0518

McKIM&CREED
CIVIL ENGINEER
243 NORTH FRONT STREET
WILMINGTON, NORTH CAROLINA
28401
910.343.1048

PROFESSIONAL SEAL

NOT FOR CONSTRUCTION
CLARK NEXSEN CERT NO. 50680 NORTH CAROLINA
NORTH CAROLINA PROFESSIONAL SEAL 027766 ENGINEER

NC CORPORATE ENGINEERING LICENSE #C-1028

SUBMITTAL
04/15/2019
CONSTRUCTION DOCUMENT SUBMITTAL 01

REVISIONS

KEY PLAN

SHEET
FIFTH LEVEL - LIGHTING, POWER AND SYSTEMS PLAN

E-103

DESIGN: JE
DRAWN: KAW
REVIEW: WAZ

CN 8112

4/12/2019 2:11:39 PM
C:\Revit Projects\8112_UNCW Parking Deck II E17_Benton.Davis@clarknexsen.com.rvt

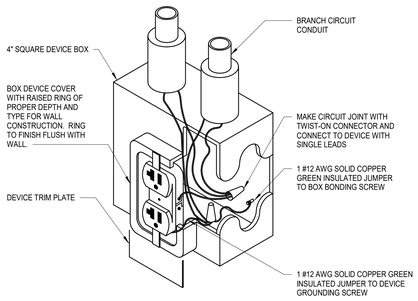

8 RECEPTACLE GROUNDING DETAIL
NO SCALE

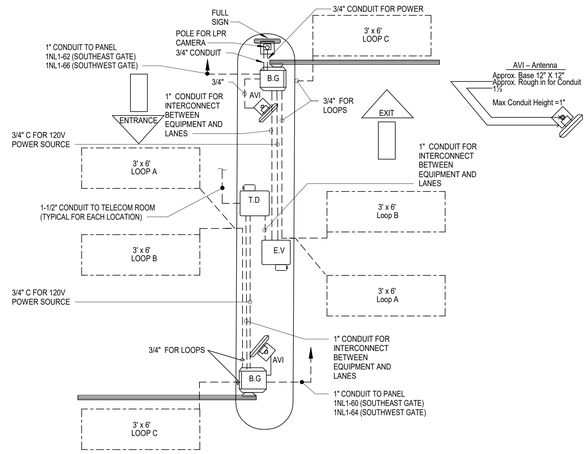

DETAIL LEGEND
B.G - BARRIER GATE
T.D - TICKET DISPENSER (OPTION: W/BARCODE, PROX, MAG)
E.V - EXIT VERIFIER/CC OUT (OPTION: W/BARCODE, PROX, MAG)
AVI - ANTENNA/READER
P.B - PROTECTION BOLLARD
LPR - LICENSE PLATE RECOGNITION

9 ENLARGED ENTRANCE GATE WIRING DETAIL (SOUTHEAST AND SOUTHWEST)
NO SCALE

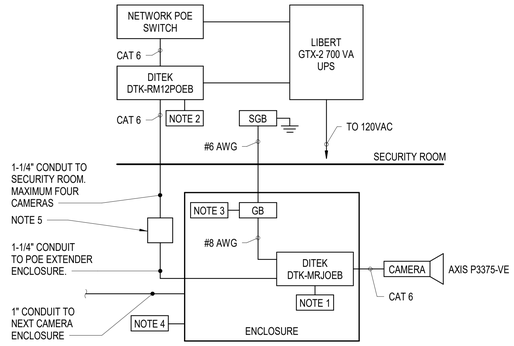

1. PROVIDE CAT 6 SURGE PROTECTOR (DTK- MRJPOE) IN AN ENCLOSURE LOCATED WITHIN 6 FEET OF EACH CAMERA.
2. PROVIDE RACK MOUNTED DITEK DTK-RM12POE 12 PORT SURGE PROTECTION PATCH PANEL. SURGE PROTECTION PATCH PANEL SHALL BE GROUNDED USING #8 AWG WIRE TO SGB.
3. PROVIDE GROUND BAR IN ENCLOSURE TO PROVIDE A CONNECTION TO GROUND FOR CAMERA SURGE PROTECTORS. THE DISTANCE BETWEEN THE DITEK MRJPOE MODULES AND GROUND SHOULD BE LESS THAN THE CABLE DISTANCE BETWEEN THE MODULE AND THE CAMERA IT PROTECTS. PROVIDE #6 AWG, GREEN, INSULATED, AND STRANDED GROUND CONDUCTOR FROM SGB IN THE SECURITY ROOM TO GROUND BAR. PROVIDE #8 AWG, GREEN, INSULATED, AND STRANDED GROUND CONDUCTOR FROM GROUND BAR TO EACH CAMERA SURGE PROTECTOR.
4. PROVIDE HINGED ENCLOSURE LOCATED WITHIN 6 FEET OF EACH CAMERA TO HOUSE DTK-MRJPOEB AND GROUND BAR. HINGED ENCLOSURE SHALL BE 8" SQUARE AND 6" DEEP.
5. PROVIDE 18" x 18" x 6" DEEP HINGED ENCLOSURE FOR POE EXTENDER (AXIS MODEL# T8129-E). INSTALL ENCLOSURE AT MAXIMUM 250 FEET FROM SECURITY ROOM TO EACH HOME RUN. PROVIDE ONE POE EXTENDER PER EACH CAT6 CABLE AND LABEL.

10 CAMERA STANDARDS DETAIL
NO SCALE

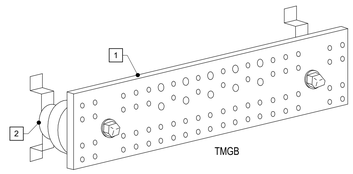

NOTES:

1. COPPER GROUND BAR, DOUBLE LUG CONFIGURATION; TMGB 1/4 X 4" X 24". UL LISTED WITH PRE DRILLED HOLES IN BICSI PATTERN.
2. STANDOFF BRACKET ASSEMBLY WITH INSULATORS, TYPICAL FOR TWO.

5 TELECOMMUNICATIONS GROUNDING BUSBAR DETAILS
NO SCALE

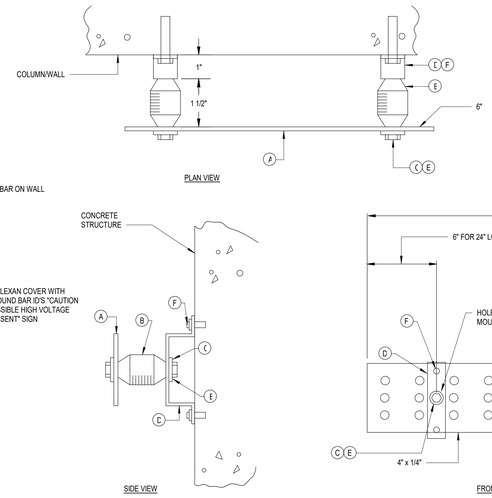

(A) COPPER GROUND BAR
(B) INSULATORS
(C) 3/8" LOCKWASHERS
(D) WALL MOUNTING BRACKET
(E) 3/8 = 11x1" HEX CAP SCREW BOLT
(F) PROVIDE APPROPRIATE EXPANSION SHIELDS & BOLTS FOR MOUNTING ON CONCRETE STRUCTURE

GENERAL NOTES:

1. PROVIDE THREE HOLES SUITABLE FOR NEMA SPACING FOR #1/0 THROUGH 500 KCMIL 2 HOLE COMPRESSION CONNECTORS.
2. PROVIDE 1/4" LEXAN COVER WITH GROUND BAR ID'S "CAUTION POSSIBLE HIGH VOLTAGE PRESENT" SIGN.
3. PROVIDE 50% SPARE HOLES FOR EACH GROUND BAR.

6 ELECTRICAL GROUNDING BUSBAR DETAIL
NO SCALE

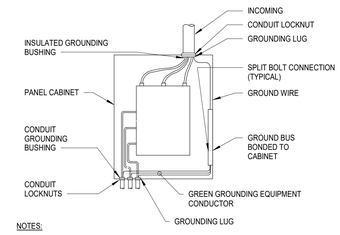

NOTES:

1. WIRES TO BE NEATLY LACED.
2. AT THE POINT OF ATTACHMENT OF THE GROUNDING LUG TO THE CABINET, THE SURFACES SHALL BE SCRAPED FREE OF PAINT AND THOROUGHLY CLEANED TO INSURE PROPER BONDING.
3. NEUTRAL CONDUCTOR NOT SHOWN FOR CLARITY.

7 TYPICAL PANEL GROUNDING
NO SCALE

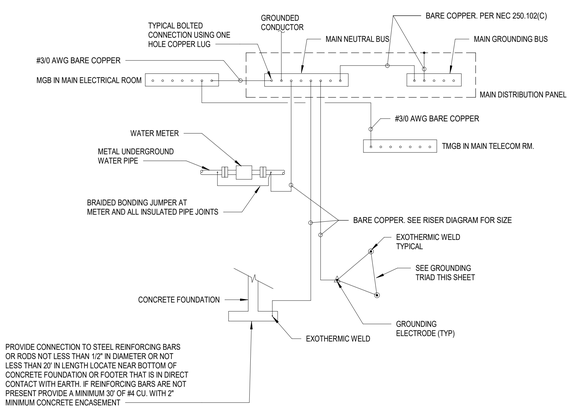

NOTES:

1. GROUNDING ELECTRODE SYSTEM. CONFORM TO NEC ARTICLE 250.

1 GROUNDING SYSTEM DETAIL
NO SCALE

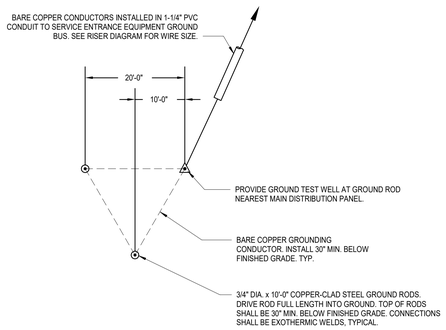

2 GROUNDING TRIAD
NO SCALE

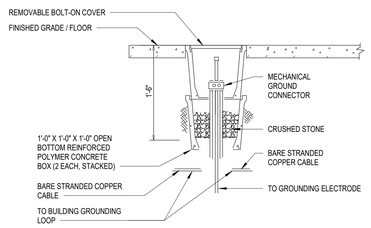

3 GROUNDING TEST WELL
NO SCALE

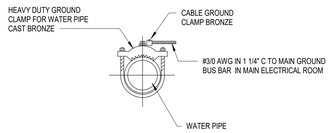

4 GROUND CABLE CONNECTION TO WATER PIPE
NO SCALE

UNCW
UNIVERSITY of NORTH CAROLINA WILMINGTON
601 S COLLEGE ROAD
WILMINGTON, NORTH CAROLINA 28403

PARKING DECK II AND SURFACE PARKING (DESIGN-BUILD)
SOUTH CAMPUS - 4965 RIEGEL ROAD

SCO ID NUMBER: 18-19226-01A
CODE: 41828
ITEM: 301

CONTRACTOR
Balfour Beatty Construction

DESIGNER

CLARKNEXSEN
1523 ELIZABETH AVENUE, SUITE 300
CHARLOTTE, NORTH CAROLINA 28204
704·377·8800
CLARK NEXSEN LICENSE NUMBER: C-1028

WALKER CONSULTANTS
13860 Ballantyne Corporate Place
Suite 140
Charlotte, NC 28277
T: 704.247.6230
www.walkerconsultants.com
NC License No. F-0518

McKIM&CREED
CIVIL ENGINEER
243 NORTH FRONT STREET
WILMINGTON, NORTH CAROLINA
28401
910.343.1048

PROFESSIONAL SEAL
NOT FOR CONSTRUCTION
CLARK NEXSEN CERT NO. 50680 NORTH CAROLINA
NORTH CAROLINA PROFESSIONAL SEAL 027766 ENGINEER
NC CORPORATE ENGINEERING LICENSE #C-1028

SUBMITTAL
04/15/2019
CONSTRUCTION DOCUMENT SUBMITTAL 01

REVISIONS

KEY PLAN

SHEET
ELECTRICAL DETAILS

E-500

DESIGN: WAZ
DRAWN: KAW
REVIEW: WAZ

CN 8112

4/12/2019 2:11:42 PM
C:\Revit Projects\8112_UNCW Parking Deck II E17_Benton.Davis@clarknexsen.com.rvt

FEEDER SCHEDULE

DESIGNATION	NO. OF SETS	CONDUCTORS PHASE	CONDUCTORS NEUTRAL	CONDUCTORS GROUND	CONDUIT	NOTES
40	1	3#8	1#8	#8	1"	COPPER
40BS	1	3#6	1#6	#8	1"	COPPER
40VD	1	3#6	1#6	#8	1"	COPPER
50B	1	3#4	1#4	#8	1-1/4"	COPPER
110D	1	3#1	-	1#6	1-1/4"	COPPER
150Y	1	3#1/0	1#1/0	1#6	1-1/2"	COPPER
250TS	1	3-250 KCMIL	1-250 KCMIL	1#2	3"	COPPER
250US	1	3-300 KCMIL	1-300 KCMIL	-	4" (1-4" SPARE)	COPPER

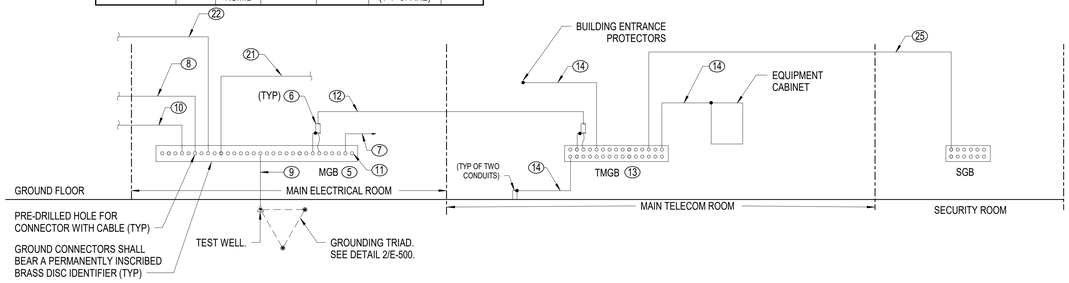

3 POWER & TELECOM GROUNDING RISER
NO SCALE

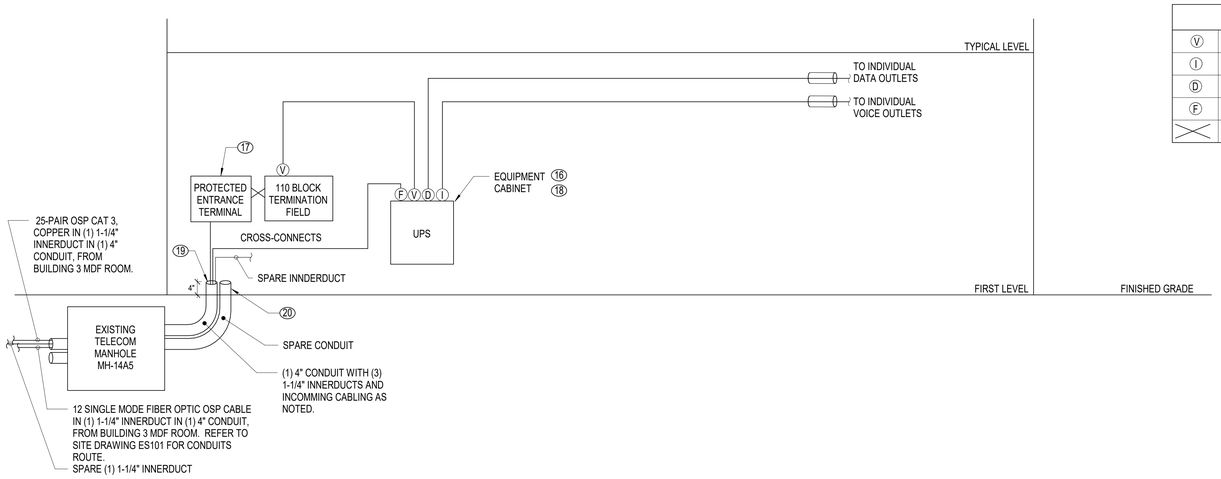

CABLE LEGEND

V	PUNCH-DOWN TERMINATION FOR VOICE, CATEGORY 6
I	PATCH PANEL TERMINATION FOR VOICE (VOIP), CATEGORY 6
D	PATCH PANEL TERMINATION FOR DATA, CATEGORY 6
F	LC TERMINATIONS FOR FIBER OPTIC CABLE AT FIBER ENCLOSURE
X	CROSS CONNECT CABLING, CATEGORY 6

2 TELECOM RISER DIAGRAM
NO SCALE

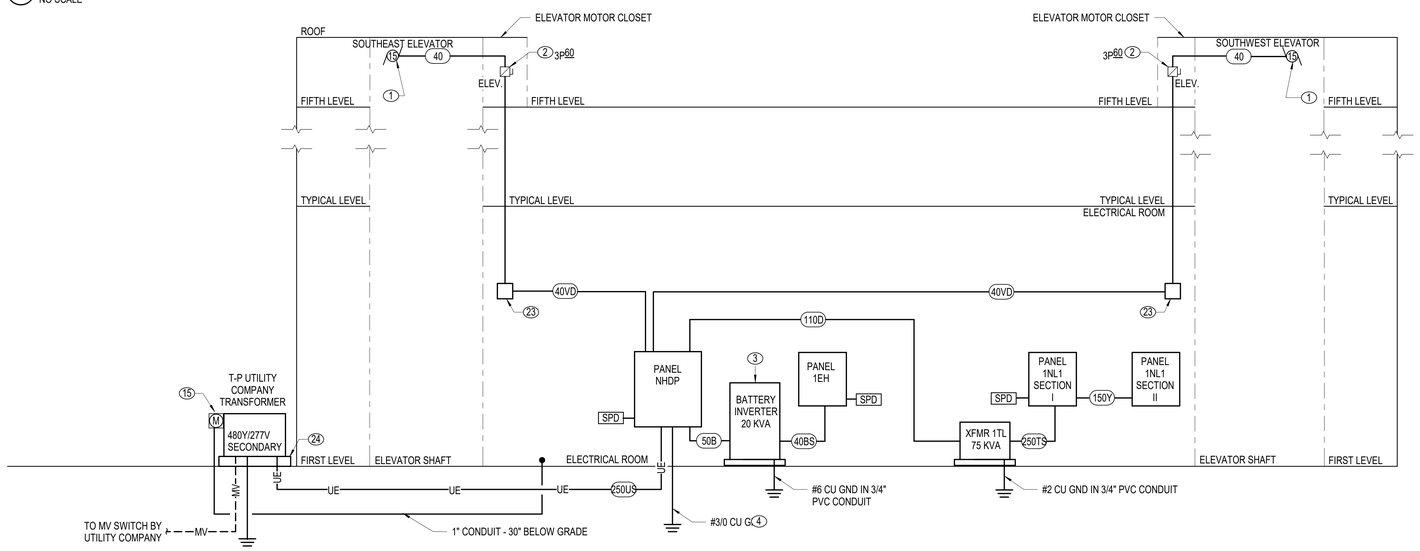

1 POWER RISER DIAGRAM
NO SCALE

GENERAL NOTES

1. FOR SITE PLAN AND DETAILS REFER TO DRAWING ES101, ES501 AND ES502.
2. FOR ELECTRICAL DETAILS REFER TO DRAWING E-500.

NOTES

1 COORDINATE ELEVATOR REQUIREMENTS WITH SPECIFICATION SECTION 142100 AND ELEVATOR SUPPLIER.

2 HEAVY DUTY FUSE DISCONNECT. PROVIDE WITH CURRENT LIMITING CLASS RK1 FUSES, AND RATING PER MANUFACTURER RECOMMENDATION. DISCONNECT SHALL BE EQUIPPED WITH TWO AUXILIARY CONTACTS THAT ARE POSITIVELY OPENED WHEN POWER IS REMOVED FROM THE ELEVATOR SYSTEM.

3 THREE-PHASE CENTRAL LIGHTING INVERTER, DOUBLE CONVERSION, 24 KW, 480Y/ 277V INPUT, 480Y/277V OUTPUT. PROVIDE WITH SIESMIC FLOOR KIT. PROVIDE FULL SELECTIVE COORDINATION OF THE EMERGENCY SYSTEM PER NEC-700.28 REQUIREMENT. EMERGENCY SYSTEM OVERCURRENT DEVICES SHALL BE SELECTIVELY COORDINATED WITH ALL SUPPLY SIDE OVERCURRENT PROTECTIVE DEVICES. INVERTER INPUT AND OUTPUT BREAKERS SHALL BE LSI TYPE. PROVIDE BREAKER FRAMES AND SENSOR UNITS PER THE COORDINATION STUDY RESULTS, AND TRIP UNITS AS INDICATED ON THE DRAWING. (INVERTER INPUT BREAKER AND OUTPUT BREAKER SHALL BE MINIMUM 18 KAIC). SEE SPECIFICATION SECTION 260573 FOR SELECTIVE COORDINATION REQUIREMENT. INVERTER SHALL COMPLY WITH UL 924, NFPA 101 AND NFPA 70. CRUCIAL POWER PRODUCTS MODEL# WR030H09LHT3-VA (OR APPROVED EQUAL).

4 REFER TO GROUNDING SYSTEM DETAIL 1/E-500 FOR GROUNDING REQUIREMENTS.

5 MAIN GROUNDING BUSBAR (MGB) 24". (SEE DETAIL 6 ON DRAWING E-500)

6 RUN GROUNDING ELECTRODE CONDUCTOR BETWEEN THE MAIN AND LOCAL GROUND BUS BARS IN CONDUIT. BOND THE METAL CONDUIT AT EACH END TO THE GROUND BUS BARS.

7 RUN ONE #10 AWG IN 3/4"C TO FIRE ALARM PANELS. (REFER TO FA DRAWINGS FOR LOCATION OF FIRE ALARM PANELS)

8 RUN ONE #3/0 AWG IN 1-1/4"C TO MAIN WATER PIPE. (REFER TO PUMBING DRAWINGS FOR LOCATION OF MAIN WATER PIPE)

9 RUN ONE #3/0 IN 1-1/4"C TO GROUNDING TRIAD.

10 BOND THE INTERIOR METALLIC PIPING TO THE GROUNDING SYSTEM PROVIDE A BONDING JUMPER ACROSS THE WATER METER. (SEE PLUMBING DRAWINGS FOR LOCATION OF WATER METER)

11 PROVIDE 50% SPARE HOLES. (TYP FOR ALL GROUND BUS BARS)

12 GROUNDING CONDUCTORS BETWEEN THE MGB AND THE TMGB SHALL BE #3/0 AWG, UON. CONNECT GROUNDING CONDUCTORS USING COMPRESSION CONNECTORS.

13 TELECOMMUNICATIONS MAIN GROUNDING BUSBAR (TMGB). (SEE DETAIL 5 ON DRAWING E-500)

14 #6 AWG BONDING JUMPER.

15 NEW PAD MOUNTED TRANSFORMER, METER BASE, CURRENT TRANSFORMERS (CT'S) AND REQUIRED METER SHALL BE PROVIDED AND INSTALLED BY UTILITY COMPANY. CONTRACTOR SHALL INSTALL ONE 1" EMPTY CONDUIT FROM METER BASE TO ELECTRICAL ROOM FOR INTERFACE WITH BUILDING MANAGEMENT SYSTEM. WIRING FROM METER BASE BY UNCW IT. TERMINATE CONDUIT 12" AFF NEAR PANEL NHDP. REFER TO SITE DRAWINGS FOR ADDITIONAL INFORMATION.

16 WALL MOUNT TELECOMMUNICATIONS ENCLOSURE "CUBE-IT PLUS" CABINET, EQUIVALENT TO CHATSWORTH PRODUCTS INC. (CPI) PART #11840-736, 24" WIDTH X 24" DEPTH X 36" HEIGHT, STEEL, METAL DOOR, BLACK, WITH 19" EIA MOUNTING RAIL. PROVIDE A PUSHBUTTON LOCK BOX FOR ENCLOSURE'S KEYS STORAGE , AND MOUNT TO THE OUTSIDE OF THE WALL MOUNT ENCLOSURE.

17 MOUNT PROTECTED ENTRANCE TERMINAL IN THE BACK OF THE WALL MOUNT ENCLOSURE AND LINK TO THE TERMINATION POINT.

18 CABINET UPS WILL BE PROVIDED BY UNCW-IT.

19 PROVIDE HOLE PLUG DESIGNED TO SEAL. AROUND EACH INDIVIDUAL INNERDUCT AND SEALED TO PREVENT LEAKAGE INTO THE BUILDING

20 SEAL ALL DUCTS AT TERMINATIONS OR ALL CONDUIT ENTRY POINTS WITH EXPANDABLE REUSABLE CONDUIT PLUGS CAPABLE OF WITHSTANDING 15-PSI MINIMUM HYDRO STATIC PRESSURE IN MANHOLE AND BUILDING.

21 TO ELECTRICAL EQUIPMENT, TRANSFORMER, BATTERY INVERTER. REFER TO POWER RISER DIAGRAM FOR CONDUCTOR SIZES AND QUANTITY.

22 BOND EXPOSED METAL FRAME WORK AT EACH STAIR WITH MINIMUM #2 AWG IN 3/4" CONDUIT.

23 PROVIDE 6" SQUARE PULL BOX BETWEEN THE HORIZONTAL AND VERTICAL CONDUIT RUN AND AS REQUIRED PER CODE.

24 REFER TO DETAIL 7 DRAWING ES501 FOR TRANSFORMER CONCRETE PAD WORKING CLEARANCE REQUIREMENTS AND SECONDARY CONDUIT TERMINATION.

25 GROUNDING CONDUCTOR BETWEEN THE TMGB AND SGB SHALL BE MINIMUM #4 AWG, UON. CONNECT GROUNDING CONDUCTORS USING COMPRESSION CONNECTORS.

UNCW
UNIVERSITY of NORTH CAROLINA WILMINGTON
601 S COLLEGE ROAD
WILMINGTON, NORTH CAROLINA 28403

PARKING DECK II AND SURFACE PARKING (DESIGN-BUILD)
SOUTH CAMPUS - 4965 RIEGEL ROAD

SCO ID NUMBER: 18-19226-01A
CODE: 41828
ITEM: 301

CONTRACTOR
Balfour Beatty Construction

DESIGNER

CLARKNEXSEN
1523 ELIZABETH AVENUE, SUITE 300
CHARLOTTE, NORTH CAROLINA 28204
704·377·8800
CLARK NEXSEN LICENSE NUMBER: C-1028

WALKER CONSULTANTS
13860 Ballantyne Corporate Place
Suite 140
Charlotte, NC 28277
T: 704.247.6230
www.walkerconsultants.com
NC License No. F-0518

McKIM&CREED
CIVIL ENGINEER
243 NORTH FRONT STREET
WILMINGTON, NORTH CAROLINA
28401
910.343.1048

PROFESSIONAL SEAL
NOT FOR CONSTRUCTION
CLARK NEXSEN CERT NO. 50680 NORTH CAROLINA
NORTH CAROLINA PROFESSIONAL SEAL 027786 ENGINEER
NC CORPORATE ENGINEERING LICENSE #C-1028

SUBMITTAL
04/15/2019
CONSTRUCTION DOCUMENT SUBMITTAL 01

REVISIONS

KEY PLAN

SHEET
RISER DIAGRAMS

E-600

DESIGN: WAZ
DRAWN: KAW
REVIEW: WAZ

CN 8112

4/12/2019 2:11:44 PM
C:\Revit Projects\8112_UNCW Parking Deck II E17_Benton.Davis@clarknexsen.com.rvt

LUMINAIRE SCHEDULE

TYPE	DESCRIPTION	MANUFACTURER	MODEL NO.	LAMPS TYPE	VOLTAGE	POWER	MOUNTING	NOTES
A	17" DIAMETER LED LUMINAIRE WITH TYPE V DISTRIBUTION, TEXTURED POLYCARBONATE LENS, LIGHT GRAY FINISH, INTEGRAL DRIVER, FUSING, INTEGRAL OCCUPANCY SENSOR AND PHOTOCELL (SUFFIX "TL50").	KENALL OR EQUIVALENT	TD17-QM-5S-TP-LG-72L-40K8-DCC-DV-FS-TL50	LED	277 V	78 VA	SURFACE	
B	23" DIAMETER LED LUMINAIRE WITH TYPE V DISTRIBUTION, WIDE, TEXTURED CLEAR POLYCARBONATE LENS, LIGHT GRAY FINISH, INTEGRAL DRIVER, FUSING, INTEGRAL OCCUPANCY SENSOR AND PHOTOCELL (SUFFIX "TL50"). MOUNTED ON A 25'-0" HINGED POLE. POLE TO BE PROVIDED WITH A DAMPER PER MANUFACTURER RECOMMENDATIONS.	KENALL OR EQUIVALENT POLE: KW INDUSTRIES OR EQUIVALENT	TPD23-5S-TP-LG-295L40K-DCC-DV-FS-TMA-TW180-TL50 POLE: THSP25-7.15-7-K841-DM2180-WPRP-BC- WITH THSP-LW-7.15 LOWERING WINCH	LED	277 V	325 VA	POLE MOUNTED	
C	8" X 4' LINEAR 0-10 VOLT DIMMABLE LED LUMINAIRE WITH MATTE WHITE FINISH, CLEAR POLYCARBONATE LENS, INTEGRAL DRIVER AND FUSING. LUMINAIRE STEMS ARE NOT PROVIDED WITH FIXTURE, CONTRACTOR TO PROVIDE.	KENALL OR EQUIVALENT	MLHA8-48-F-MW-CP-45L40K-DCC-1-DV-FS-PM	LED	277 V	49 VA	PENDANT MTD 10'-0" FROM BOTTOM OF FIXTURE TO AFF	
C2	8" X 8' LINEAR (TWO 4'-0" LUMINAIRES FACTORY CONNECTED) LED LUMINARIE WITH MATTE WHITE FINISH, CLEAR POLYCARBONATE LENS, INTEGRAL DRIVER AND FUSING. LUMINAIRE STEMS ARE NOT PROVIDED WITH FIXTURE, CONTRACTOR TO PROVIDE.	KENALL OR EQUIVALENT	MLHA96-F-MW-CP-45L40K-DCC-1-DV-FS-PM	LED	277 V	98 VA	PENDANT MTD 10'-0" FROM BOTTOM OF FIXTURE TO AFF.	
D	VAPORTITE LED LUMINAIRE WITH SILVER FINISH, WALL MOUNTED 36" ABOVE ELEVATOR PIT FLOOR AND AT TOP OF ELEVATOR SHAFT 4'-0" ABOVE MOTOR MAINTENANCE DECK HEIGHT. FIELD COORDINATE SPECIFICS WITH ELEVATOR SUPPLIER.	SPECTRUM OR EQUIVALENT	WJ1LW-20L-40K-EX-FJ1-CP104KO-PT	LED	277 V	16 VA	WALL	
H	2'-0" LINEAR LED STRIPLIGHT, WALL MOUNTED AND CENTERED ABOVE DOOR WITH WHITE STEEL FINISH, FROSTED ACRYLIC LENS AND ON/OFF DRIVER FUNCTION.	COLUMBIA OR EQUIVALENT	LCL2-40ML-EU	LED	277 V	24 VA	WALL	
J1	18" ARCHITECTURAL STYLE WALL PACK WITH SINGLE FUSE, TYPE IV FORWARD THROW DISTRIBUTION, GRAY FINISH AND INTEGRAL PHOTOCELL UON. CENTER OF FIXTURE WALL MOUNTED 10'-6" AFG.	KIM LIGHTING OR EQUIVALENT	WDM-D-48L-55-4K8-4F-UNV-LG-PC-SF	LED	277 V	55 VA	WALL MTD	DO NOT PROVIDE INTEGRAL PHOTO CELL FOR LUMINARES CONTROLLED VIA LIGHTING CONTACTOR
J2	13" ARCHITECTURAL STYLE WALL PACK WITH SINGLE FUSE, FORWARD THROW DISTRIBUTION, DIFFUSE LENS, GRAY FINISH AND INTEGRAL PHOTOCELL UON. CENTER OF FIXTURE WALL MOUNTED 10'-6" AFG.	KIM LIGHTING OR EQUIVALENT	WDS-D-24L-40-4K8-FTD-UNV-LG-PC-SF	LED	277 V	42 VA	WALL MTD	DO NOT PROVIDE INTEGRAL PHOTO CELL FOR LUMINARES CONTROLLED VIA LIGHTING CONTACTOR
J3	18" ARCHITECTURAL STYLE UP MOUNTING WALL PACK WITH SINGLE FUSE, TYPE SPOT/COLUMN DISTRIBUTION, GREY FINISH. MOUNT CENTER OF FIXTURE AT 17'-0" AFG.	KIM LIGHTING OR EQUIVALENT	WDM-U-48L-65-4K8-SP-UNV-LG-SF	LED	277 V	68 VA	WALL MTD	
P1	POST TOP LIGHT WITH TYPE V DISTRIBUTION, 6000 LUMEN OUTPUT, 5000K CCT, FROSTED GLASS AND BLACK FINISH. MOUNTED ON 14' BLACK POLE.	YAORONG POLE: GE LIGHTING SOLUTION OR EQUIVALENT	YR-TP300-W060 POLE: ARTA-14-3S-5.0-B-BL-T	LED	277 V	60 VA	MOUNTED ON 14' POLE	POLE SHALL BE UL LISTED. REFER TO DETAIL 1 / ES502.
P2	13.6" X 4" STREET LIGHT WITH TYPE III DISTRIBUTION, 24,600 LUMEN OUTPUT, 5000K CCT, AND BLACK FINISH. REUSE EXISTING POLE AND LIGHT.	FINTRONX	PLK-240-48-50K-A3M112--BL	LED	480 V	240 VA	POLE MOUNTED	REUSE EXISTING/ RELOCATED POLES. REFER TO DETAIL 2 / ES502.
X1	SINGLE FACE WET LABEL EXIT SIGN WITH RED LETTERS AND WHITE DIE-CAST ALUMINUM HOUSING. PROVIDE WITH PENDANT MOUNT KIT. SIGN TO BE MOUNTED A MINIMUM OF 8'-2" ABOVE FINISHED FLOOR TO BOTTOM OF EXIT SIGN WITH WORDING IN COMPLETE VIEW BELOW BEAMS.	DUAL-LITE OR EQUIVALENT	SEWL-SRW	LED	277 V	5 VA	PENDANT MTD 8'-2" TO BOTTOM OF SIGN MINIMUM	
X2	SINGLE FACE WET LABEL EXIT SIGN WITH RED LETTERS AND WHITE DIE-CAST HOUSING, FLAT WALL MOUNTED AND CENTERED ABOVE DOORS.	DUAL-LITE OR EQUIVALENT	SEWL-SRW	LED	277 V	5 VA	FLAT WALL	
X3	DOUBLED FACED EXIT SIGN WITH RED LETTERS AND WHITE DIE-CAST ALUMINUM HOUSING. PROVIDE WITH PENDANT MOUNT KIT AND CHEVRONS AS NOTED ON FLOOR PLANS. BE MOUNTED A MINIMUM OF 8'-2" ABOVE FINISHED FLOOR TO BOTTOM OF EXIT SIGN WITH WORDING IN COMPLETE VIEW BELOW BEAMS.	DUAL-LITE OR EQUIVALENT	SEWL-DRW	LED	277 V	5 VA	PENDANT MTD 8'-2" TO BOTTOM OF SIGN MINIMUM	

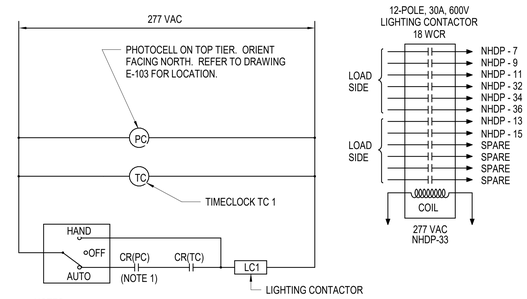

NOTES:
1. PHOTOCELL CONTACTS CLOSE AT DUSK, OPEN AT DAYBREAK.
2. LIGHTING CONTACTOR AND H.O.A. SELECTOR SWITCH SHALL BE PROVIDED WITH HINGED DOOR AND LOCKABLE COVER.
3. REFER TO DRAWING E-101 FOR EQUIPMENT LOCATIONS.

2 EXTERIOR NORMALLY POWERED LIGHTING CONTROL - VIA CONTACTOR (LC1)
NO SCALE

EQUIPMENT CONNECTION SCHEDULE

EQUIPMENT DESIGNATION			EQUIPMENT RATINGS							STARTER	DISCONNECT DATA		
EQUIPMENT DESIGNATION	LOCATION	DESCRIPTION	HP / WATTS	VOLT	PH	FLA	KVA	OCPD	TYPE	TYPE	RATING	OCPD
CU-1/AC-1	TELECOM AND SECURITY ROOMS	SPLIT SYSTEM	2300W	208	1	11.2	2.33	15		MAG	30	MANUF
CU-2/AC-2	ELECTRICAL ROOM	SPLIT SYSTEM	2300W	208	1	11.2	2.33	20		MAG	30	MANUF
UH-1	ELECTRICAL ROOM	UNIT HEATER	5000W	208	3	13.9	5.01	20		MAG	30	MANUF
SP-1	SOUTHEAST ELEVATOR SHAFT	SUMP PUMP	.5 HP	120	1	9.8	1.18	20		MRS	20	----
SP-2	SOUTHWEST ELEVATOR SHAFT	SUMP PUMP	.5 HP	120	1	9.8	1.18	20		MRS	20	----
FACP	ELECTRICAL ROOM	FIRE ALARM CONTROL UNIT	720W	120	1	6.0	0.72	20		----	----	----
HP-1/ACHP-1	ELEVATOR CLOSET	HEAT PUMP	3000W	208	1	14.4	3.00	30		MAG	30	MANUF
P-1	EXTERIOR	BOOSTER PUMP	2HP	208	3			20		NF	30	

ABBREVIATIONS

NF	NON-FUSED	MAG	MAGNETIC STARTER
MANUF.	PROVIDE IN ACCORDANCE WITH MANUFACTURER'S RECOMMENDATION		
MRS	MOTOR RATED SWITCH		
----	INDICATES NOT APPLICABLE		
MCCB	MOLDED CASE CIRCUIT BREAKER		

NOTE 1: CONDUIT SIZES BASED OF 40% FILL OF EMT. CONTRACTOR SHALL SIZE CONDUIT PER NEC IF CONDUIT OTHER THAN EMT IS USED.

PANEL NHDP SCHEDULE

250 AMP MCB 480Y/277 VOLTS 3PH, 4W, SN MIN. 18 KAIC SURFACE MOUNTED

CKT. NO.	LOAD DESCRIPTION	COND SIZE	WIRE SIZE	BKR TRIP	AMPS	KVA	PH	KVA	AMPS	BKR TRIP	WIRE SIZE	COND SIZE	LOAD DESCRIPTION	CKT. NO.
1	PANEL 1EH	1-1/4	4	50	28.2	7.8	A	5.8	21.0	40	*	*	SOUTHEAST ELEVATOR MOTOR	2
3	VIA BATTERY INVERTER				23.5	6.5	B	5.8	21.0					4
5	LSI TYPE, 100 A FRAME 50 A TRIP				14.0	3.9	C	5.8	21.0					6
7	EXTERIOR PEDESTRIAN LIGHTING	1-1/2	6	20	0.7	0.2	A			20			SPARE	8
9					0.7	0.2	B	5.8	21.0	40	*	*	SOUTHWEST ELEVATOR MOTOR	10
11					0.7	0.2	C	5.8	21.0					12
13	EXTERIOR BUILDING LIGHTING	3/4	10	20	2.2	0.6	A	5.8	21.0					14
15	EXTERIOR WALL WASH STAIR LIGHTING	3/4	10	20	3.3	0.8	B			20			SPARE	16
17	FIRST TIER LIGHTING	3/4	10	20	2.8	0.8	C	0.9	3.1	20	10	3/4	SECOND TIER LIGHTING	18
19	FIRST TIER LIGHTING	3/4	10	20	4.2	1.2	A	0.9	3.1	20	10	3/4	SECOND TIER LIGHTING	20
21	FIRST TIER LIGHTING	3/4	10	20	3.1	0.9	B	0.9	3.1	20	10	3/4	SECOND TIER LIGHTING	22
23	THIRD TIER LIGHTING	3/4	10	20	3.1	0.9	C	0.9	3.1	20	10	3/4	FOURTH TIER LIGHTING	24
25	THIRD TIER LIGHTING	3/4	10	20	3.1	0.9	A	0.9	3.1	20	10	3/4	FOURTH TIER LIGHTING	26
27	THIRD TIER LIGHTING	3/4	10	20	3.1	0.9	B	0.9	3.1	20	10	3/4	FOURTH TIER LIGHTING	28
29	FIFTH TIER LIGHTING	3/4	10	20	4.7	1.3	C	0.6	2.0	20	6	1-1/2	SITE EMERGENCY PHONE	30
31	FIFTH TIER LIGHTING	3/4	10	20	4.7	1.3	A	0.8	2.9	20	6	1-1/2	EXTERIOR PARKING LIGHTING	32
33	LC1 LIGHTING CONTACTOR COIL	3/4	12	20	0.7	0.2	B	0.8	2.9	2.9				34
35	SPARE			20			C	0.8	2.9					36
37	PANEL 1NL1 SECTION I	*	*	110	104.2	28.8	A			30	10	3/4	SPD (NOTE 1)	38
39	FED VIA XFMR 1TL (75 KVA)				101.6	28.1	B							40
41					109.8	30.4	C							42

TOTAL AMPS (CONN. LOAD) A: 198.3 B: 186.6 C: 188.2
TOTAL AMPS (FEEDTHRU) A: B: C:
TOTAL AMPS (CONN. LOAD + FEED-THRU) A: 198.3 B: 186.6 C: 188.2
PANELBOARD OPTIONS:
PANELBOARD NOTES:
* REFER TO RISER DIAGRAM SHEET E-600 FOR FEEDER AND CONDUIT SIZES.
1. BREAKER RATING AND WIRE SIZE MAY VARY BY MANUFACTURER. PROVIDE BREAKER AND WIRE SIZE IN ACCORDANCE WITH MANUFACTURER RECOMMENDATIONS.

LOAD DESCRIPTION	PANEL CONN LOAD		SUBFEED CONN LOAD		FEEDTHRU CONN LOAD		TOTAL LOAD		D.F. MULT.		TOTAL KVA DEMAND	
LIGHTING	17.5	KVA	19.4	KVA		KVA	36.9	KVA	1.25	NEC	46.1	KVA
RECEPTACLES		KVA	46.4	KVA		KVA	46.4	KVA		NEC	28.2	KVA
MECH EQUIP		KVA	18.0	KVA		KVA	18.0	KVA	1.00		18.0	KVA
ELECTRIC HEAT		KVA	5.1	KVA		KVA	5.1	KVA	1.25		6.4	KVA
MISCELLANEOUS	0.2	KVA	15.0	KVA		KVA	15.2	KVA	1.00		15.2	KVA
ELEVATOR	34.9	KVA		KVA		KVA	34.9	KVA	0.80		27.9	KVA
		KVA		KVA		KVA		KVA				KVA
		KVA		KVA		KVA		KVA				KVA
		KVA		KVA		KVA		KVA				KVA
		KVA		KVA		KVA		KVA				KVA
		KVA		KVA		KVA		KVA				KVA
		KVA		KVA		KVA		KVA				KVA
TOTALS (CONN. KVA)	52.7	KVA	103.9	KVA		KVA	156.5	KVA			141.9	KVA
TOTALS (CONN. KVA + 20%)	63.2	KVA	124.7	KVA		KVA	187.9	KVA			170.3	KVA
TOTALS (CONN. AMPS)	63.3	AMPS	125.0	AMPS		AMPS	188.3	AMPS			170.7	AMPS
TOTALS (CONN. AMPS + 20%)	76.0	AMPS	150.0	AMPS		AMPS	226.0	AMPS			204.8	AMPS

PANEL 1EH SCHEDULE

100 AMP MLO 480Y/277 VOLTS 3PH, 4W, SN MIN. 14 KAIC SURFACE MOUNTED

CKT. NO.	LOAD DESCRIPTION	COND SIZE	WIRE SIZE	BKR TRIP	AMPS	KVA	PH	KVA	AMPS	BKR TRIP	WIRE SIZE	COND SIZE	LOAD DESCRIPTION	CKT. NO.
1	FIRST TIER EMERGENCY LIGHTING	3/4	10	20	5.4	1.5	A	1.3	4.5	20	10	3/4	SECOND TIER EMERGENCY LIGHTING	2
3	FIRST TIER EMERGENCY LIGHTING	3/4	10	20	4.0	1.1	B	1.3	4.8	20	10	3/4	SECOND TIER EMERGENCY LIGHTING	4
5	THIRD TIER EMERGENCY LIGHTING	3/4	10	20	4.5	1.3	C	1.3	4.5	20	10	3/4	FOURTH TIER EMERGENCY LIGHTING	6
7	THIRD TIER EMERGENCY LIGHTING	3/4	10	20	4.8	1.3	A	1.3	4.8	20	10	3/4	FOURTH TIER EMERGENCY LIGHTING	8
9	FIFTH TIER EMERGENCY LIGHTING	3/4	10	20	4.7	1.3	B			20			SPARE	10
11	FIFTH TIER EMERGENCY LIGHTING	3/4	10	20	4.7	1.3	C	0.1	0.2	20	10	3/4	ELEVATOR SHAFT SOUTHWEST LIGHTS	12
13	STAIR TOWER SOUTHWEST	3/4	10	20	8.3	2.3	A	0.1	0.2	20	10	3/4	ELEVATOR SHAFT SOUTHEAST LIGHTS	14
15	STAIR TOWER SOUTHEAST	3/4	10	20	8.3	2.3	B	0.5	1.6	20	12	3/4	TELECOM/ELECTRICAL ROOM LIGHTS	16
17	SPARE			20			C			20			SPARE	18
19	SPARE			20			A			30	10	3/4	SPD (NOTE 1)	20
21	SPARE			20			B							22
23	SPARE			20			C							24

TOTAL AMPS (CONN. LOAD) A: 28.2 B: 23.5 C: 14.0
TOTAL AMPS (FEEDTHRU) A: B: C:
TOTAL AMPS (CONN. LOAD + FEED-THRU) A: 28.2 B: 23.5 C: 14.0
PANELBOARD OPTIONS:
PANELBOARD NOTES:
1. BREAKER RATING AND WIRE SIZE MAY VARY BY MANUFACTURER PROVIDE BREAKER AND WIRE SIZE IN ACCORDANCE WITH MANUFACTURER RECOMMENDATIONS.

PANEL 1NL1 SECTION I SCHEDULE

250 AMP MCB 208Y/120 VOLTS 3PH, 4W, SN MIN. 10 KAIC SURFACE MOUNTED

CKT. NO.	LOAD DESCRIPTION	COND SIZE	WIRE SIZE	BKR TRIP	AMPS	KVA	PH	KVA	AMPS	BKR TRIP	WIRE SIZE	COND SIZE	LOAD DESCRIPTION	CKT. NO.
1	TELECOM RM CU-1/AC-1	3/4	12	15	11.2	1.2	A	0.7	6.0	20	12	3/4	FIRE ALARM CONTROL PANEL (NOTE 2)	2
3					11.2	1.2	B	1.5	14.4	30	8	3/4	ELEVATOR CLOSET SOUTHWEST	4
5	ELECTRICAL RM CU-2/AC-2	3/4	12	20	11.2	1.2	C	1.5	14.4				HP-1/ACHP-1	6
7					11.2	1.2	A	1.5	14.4	30	8	3/4	ELEVATOR CLOSET SOUTHEAST	8
9	SPARE			20			B	1.5	14.4				HP-1/ACHP-1	10
11	SOUTHWEST ELEVATOR SHAFT SP-1	3/4	10	20	9.8	1.2	C	0.3	2.5	15	8	1	HTG. BACKFLOW PREVENTER EN2L.	12
13	HEAT TRACING (NOTE 3)	1	8	15	2.5	0.3	A			20			SPARE	14
15	SECURITY RM RECEPTACLE FOR BAS	3/4	12	20	3.0	0.4	B			20			SPARE	16
17	SECURITY RM RECEPTACLE	3/4	12	20	4.5	0.5	C	1.2	11.2	15	12	3/4	SECURITY RM CU-1/AC-1	18
19	SOUTHEAST ELEVATOR SHAFT SP-2	3/4	10	20	9.8	1.2	A	1.2	11.2					20
21	SOUTHEAST ELEVATOR SHAFT RECEPT	3/4	10	20	3.0	0.4	B	0.9	7.5	20	12	3/4	TELECOM RM RECEPTACLES	22
23	SOUTHWEST ELEVATOR SHAFT RECEPT	3/4	10	20	3.0	0.4	C	0.6	5.0	20	12	3/4	TELECOM RM RECEPT. GATE EQPMT	24
25	EAST RECEPTACLES AND PHONE	3/4	10	20	7.5	0.9	A	0.6	5.0	20	12	3/4	SECURITY RM RECEPT. CAMERAS EQPMT	26
27	WEST RECEPTACLES AND PHONE	3/4	10	20	9.0	1.1	B	0.4	3.0	20	12	3/4	ELECTRICAL RM RECEPTACLES	28
29	MIDLE RECEPTACLES AND PHONE	3/4	10	20	7.5	0.9	C	1.9	16.0	20	12	3/4	TELECOM RM RECEPTACLES	30
31	SOUTHEAST ELEVATOR CAB LIGHTS	3/4	10	20	2.0	0.2	A	19.6	163.0	150	*	*	PANEL 1NL1 SECTION II	32
33	SOUTHWEST ELEVATOR CAB LIGHTS	3/4	10	20	2.0	0.2	B	19.0	158.3					34
35	PARKING MANAGEMENT SITE SIGNAGE	1-1/2	8	20	3.0	0.4	C	18.8	157.0					36
37	ELEVATOR CLOSET RECEPTACLE	3/4	10	20	3.0	0.4	A			30	10	3/4	SPD (NOTE 1)	38
39	TELECOM RM RACK RECEPTACLES	3/4	12	20	16.0	1.7	B							40
41					16.0	1.7	C							42

TOTAL AMPS (CONN. LOAD) A: 240.4 B: 234.4 C: 253.4
TOTAL AMPS (FEEDTHRU) A: B: C:
TOTAL AMPS (CONN. LOAD + FEED-THRU) A: 240.4 B: 234.4 C: 253.4
PANELBOARD OPTIONS:
PANELBOARD NOTES:
* REFER TO RISER DIAGRAM SHEET E-600 FOR FEEDER AND CONDUIT SIZES.
1. BREAKER RATING AND WIRE SIZE MAY VARY BY MANUFACTURER. PROVIDE BREAKER AND WIRE SIZE IN ACCORDANCE WITH MANUFACTURER RECOMMENDATIONS.
2. PROVIDE WITH RED LOCKABLE HANDLE FOR THE FIRE ALARM EQUIPMENT AND LOCK IN THE "ON" POSITION.
3. PROVIDE "OFF" BREAKER FOR EQUIPMENT.

PANEL 1NL1 SECTION II SCHEDULE

225 AMP MLO 208Y/120 VOLTS 3PH, 4W, SN MIN. 10 KAIC SURFACE MOUNTED

CKT. NO.	LOAD DESCRIPTION	COND SIZE	WIRE SIZE	BKR TRIP	AMPS	KVA	PH	KVA	AMPS	BKR TRIP	WIRE SIZE	COND SIZE	LOAD DESCRIPTION	CKT. NO.
43	CHARGING STATION FUTURE			40	30.0	3.1	A	3.1	30.0	40	8	3/4	CHARGING STATION	44
45	SECOND TIER				30.0	3.1	B	3.1	30.0				FIRST TIER	46
47	CHARGING STATION FUTURE			40	30.0	3.1	C	3.1	30.0	40	8	3/4	CHARGING STATION	48
49	SECOND TIER				30.0	3.1	A	3.1	30.0				FIRST TIER	50
51	CHARGING STATION FUTURE			40	30.0	3.1	B	3.1	30.0	40			CHARGING STATION FUTURE	52
53	THIRD TIER				30.0	3.1	C	3.1	30.0				THIRD TIER	54
55	PARKING SYSTEM - SERVER POWER	3/4	10	20	16.0	1.9	A	1.4	11.3	20	10	3/4	PKG ASSIST SYSTEM - GROUND TIER	56
57	PKG ASSIST SYSTEM - SECOND TIER	3/4	10	20	11.3	1.4	B	1.4	11.3	20	10	3/4	PKG ASSIST SYSTEM - THIRD TIER	58
59	PKG ASSIST SYSTEM - FOURTH TIER	3/4	10	20	11.3	1.4	C	1.2	10.0	20	10	1	SOUTHEAST GATE	60
61	ELECTRICAL ROOM UH-1	3/4	12	20	14.2	1.7	A	1.2	10.0	20	10	1	SOUTHEAST GATE	62
63					14.2	1.7	B	1.2	10.0	20	10	1	SOUTHWEST GATE	64
65					14.2	1.7	C	1.2	10.0	20	10	1	SOUTHWEST GATE	66
67	BOOSTER PUMP EXTERIOR P-1	1	8	20	7.5	0.9	A			20			SPARE	68
69					7.5	0.9	B			20			SPARE	70
71					7.5	0.9	C						BUSSED SPACE	72
73	BUSSED SPACE						A						BUSSED SPACE	74
75	BUSSED SPACE						B						BUSSED SPACE	76
77	BUSSED SPACE						C						BUSSED SPACE	78
79	BUSSED SPACE						A						BUSSED SPACE	80
81	BUSSED SPACE						B						BUSSED SPACE	82
83	BUSSED SPACE						C						BUSSED SPACE	84

TOTAL AMPS (CONN. LOAD) A: 163.0 B: 158.3 C: 157.0
TOTAL AMPS (FEEDTHRU) A: B: C:
TOTAL AMPS (CONN. LOAD + FEED-THRU) A: 163.0 B: 158.3 C: 157.0
PANELBOARD OPTIONS:
PANELBOARD NOTES:

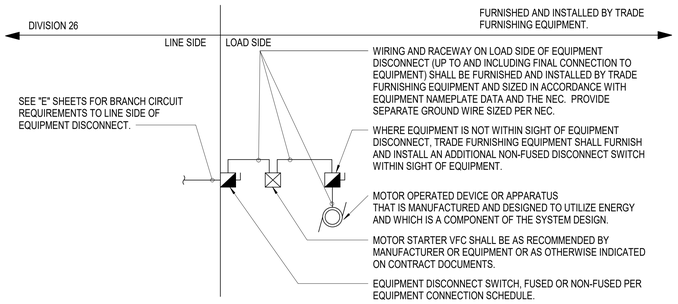

NOTE: REQUIREMENTS FOR WIRING, MATERIALS, METHODS, AND COMPONENTS SHALL BE PER DIVISION 26 SPECIFICATIONS.

1 DIVISION OF WORK DETAIL FOR DIVISIONS 23/26
NO SCALE

UNCW
UNIVERSITY of NORTH CAROLINA WILMINGTON
601 S COLLEGE ROAD
WILMINGTON, NORTH CAROLINA 28403

PARKING DECK II AND SURFACE PARKING (DESIGN-BUILD)
SOUTH CAMPUS - 4965 RIEGEL ROAD

SCO ID NUMBER: 18-19226-01A
CODE: 41828
ITEM: 301

CONTRACTOR
Balfour Beatty Construction

DESIGNER

CLARKNEXSEN
1523 ELIZABETH AVENUE, SUITE 300
CHARLOTTE, NORTH CAROLINA 28204
704.377.8800
CLARK NEXSEN LICENSE NUMBER: C-1028

WALKER CONSULTANTS
13860 Ballantyne Corporate Place
Suite 140
Charlotte, NC 28277
T: 704.247.6230
www.walkerconsultants.com
NC License No. F-0518

McKIM&CREED
CIVIL ENGINEER
243 NORTH FRONT STREET
WILMINGTON, NORTH CAROLINA
28401
910.343.1048

PROFESSIONAL SEAL
NOT FOR CONSTRUCTION
CLARK NEXSEN CERT NO. 50680 NORTH CAROLINA
NORTH CAROLINA PROFESSIONAL SEAL 027765 ENGINEER
NC CORPORATE ENGINEERING LICENSE #C-1028

SUBMITTAL
04/15/2019
CONSTRUCTION DOCUMENT SUBMITTAL 01

REVISIONS

KEY PLAN

SHEET
SCHEDULES

E-700

DESIGN: WAZ
DRAWN: KAW
REVIEW: WAZ

CN 8112

4/12/2019 2:11:48 PM
C:\Revit Projects\B172_UNCW Parking Deck II E17_Benton.Davis@clarknexsen.com.rvt